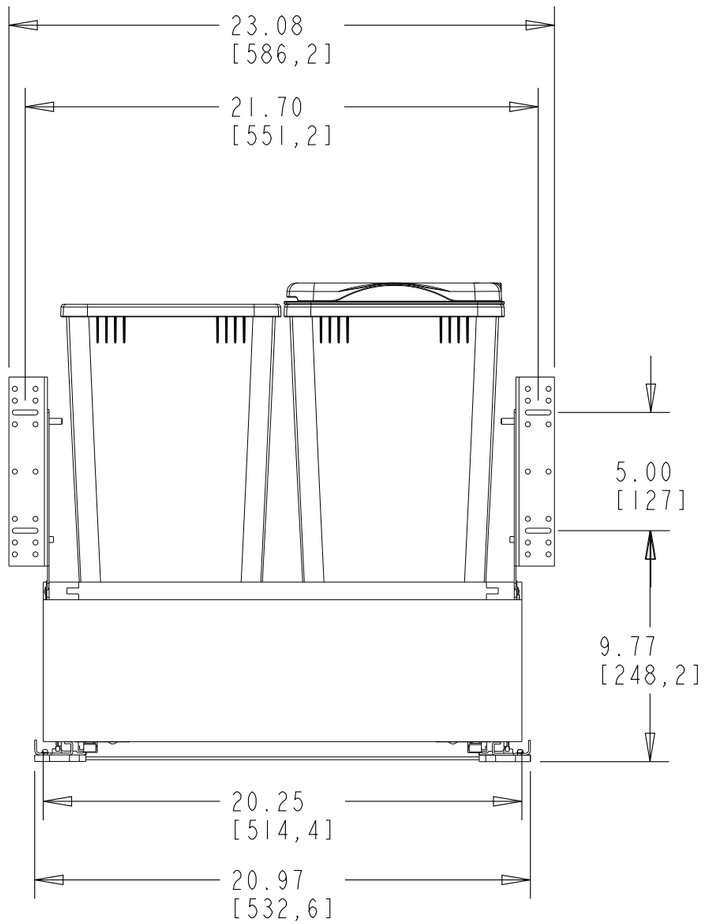

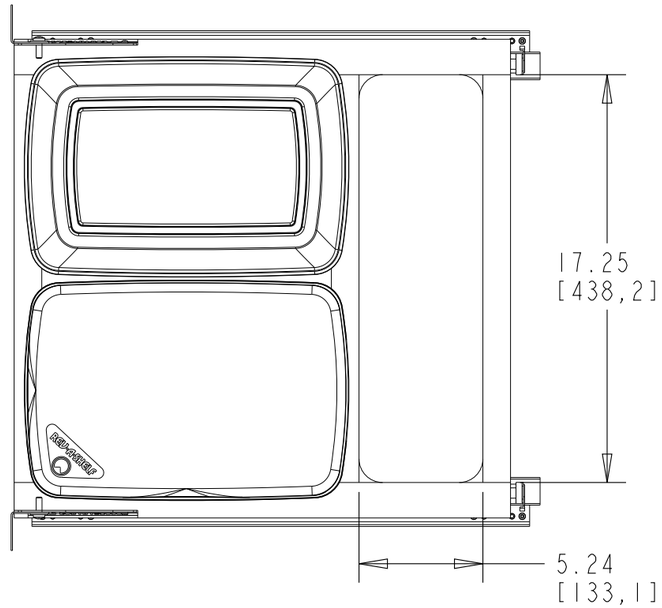

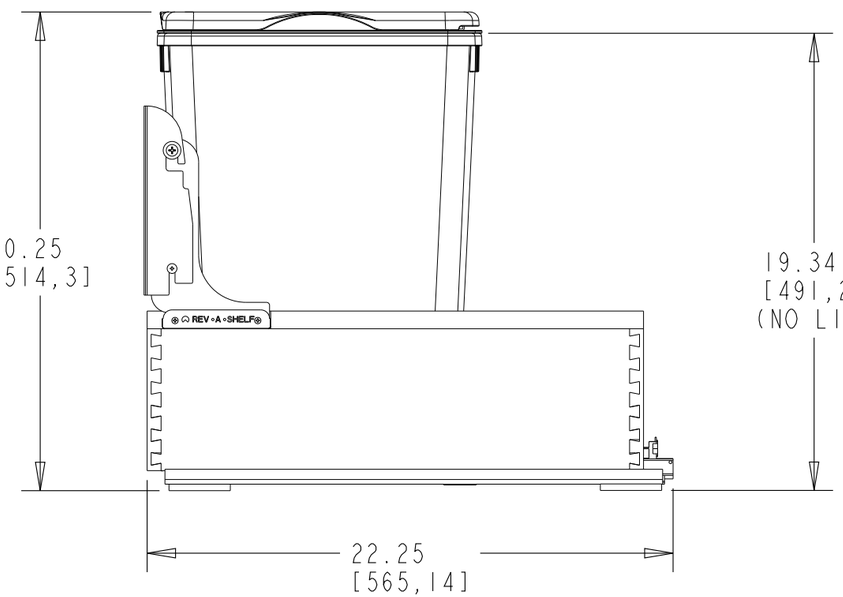

CUSTOMER DRAWING

This drawing is the property of Rev-A-Shelf (RAS) and is disclosed in confidence to the extent its subject matter is original to RAS. Any vendor receiving this drawing from RAS shall hold and use this drawing for the sole benefit of RAS and shall not disclose it to, or use or reproduce it for any third party, or perform any act adverse to the interest of RAS with respect to this drawing without the express written permission of RAS. Vendors shall not revise any physical, dimensional or performance characteristic unless authorized by Rev-A-Shelf Engineering.

REV.	DATE	BY	DESCRIPTION OF CHANGE

INCH [MM] — AMERICAN PROJECTION

TOLERANCES
MAT. DEC.
(WOOD) .XX ±.03 [.8mm]
(OTHER) .XX ±.02 [.5mm]
(ALL) .XXX ±.005 [.13 mm]
FRACTIONS ±1/32 [.8 mm]
ANGLES ±1/2°

	BY	DATE
DRAWN	KRR	10-17-24

REV-A-SHELF®, INC.

SIZE B — DBL 32 QT SC PULL OUT

MATERIAL

FINISH

DRAWING NO. 4WC-2432DM2-SC — SCALE 0.100

PART NO. 4WC-2432DM2-SC — SHEET 1 OF 2

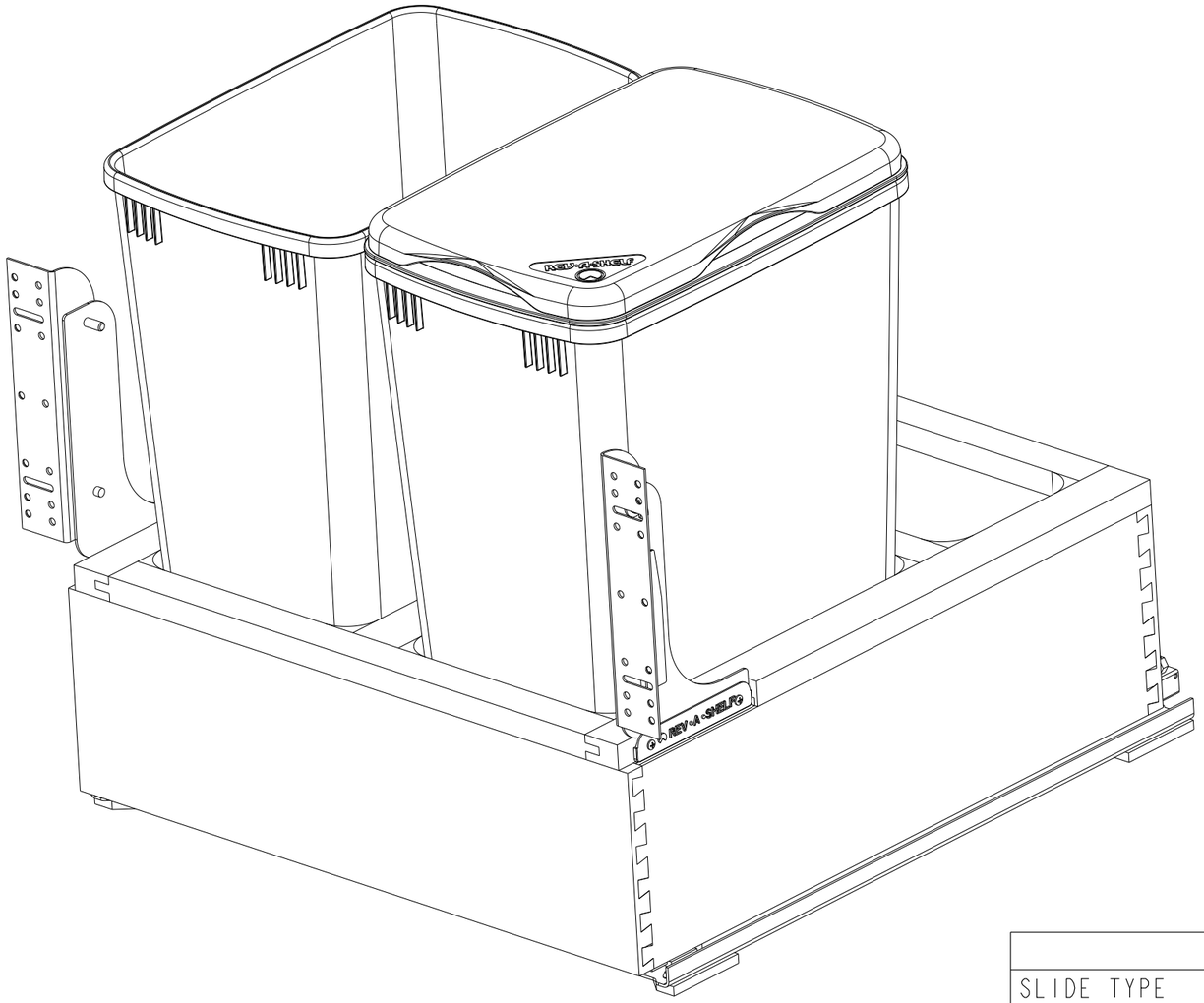

PART DIMENSIONS		
	MIN	MAX
WIDTH	20.97	
DEPTH	22.25	
HEIGHT	20.25	
WEIGHT		
DIAMETER		
RADIUS		
CONTAINTER CAPACITY	32	
CONTAINER UOM	QT	

MIN CABINET OPENING	
WIDTH	21.00
DEPTH	22.38
HEIGHT	20.63

SLIDE SPECIFICATIONS				
SLIDE TYPE	UNDER MOUNT	SLIDE EXTENSION	3/4" OT	MAX WEIGHT RATING
SLIDE CLOSING	SOFT CLOSE	SLIDE LENGTH	21 1/2"	
SLIDE MOUNTING	BOTTOM	SLIDE FINISH	ZINC	110 LB

CUSTOMER DRAWING

This drawing is the property of Rev-A-Shelf (RAS) and is disclosed in confidence to the extent its subject matter is original to RAS. Any vendor receiving this drawing from RAS shall hold and use this drawing for the sole benefit of RAS and shall not disclose it to, or use or reproduce it for any third party, or perform any act adverse to the interest of RAS with respect to this drawing without the express written permission of RAS. Vendors shall not revise any physical, dimensional or performance characteristic unless authorized by Rev-A-Shelf Engineering.

REV.	DATE	BY	DESCRIPTION OF CHANGE

INCH [MM] — AMERICAN PROJECTION

TOLERANCES
MAT. DEC. ANGLES ±1/2°
(WOOD) .XX ±.03 [.8mm]
(OTHER) .XX ±.02 [.5mm]
(ALL) .XXX ±.005 [.13 mm]
FRACTIONS ±1/32 [.8 mm]

	BY	DATE
DRAWN	KRR	10-17-24

REV-A-SHELF®, INC.

SIZE B — DBL 32 QT SC PULL OUT

MATERIAL

FINISH

DRAWING NO. 4WC-2432DM2-SC

SCALE 0.100

PART NO. 4WC-2432DM2-SC

SHEET 2 OF 2