Brochure 2022

Toilet seats

www.bemisemea.com

BEMIS 120: CARRARA & MATTA IS GOING IN STYLE

This year, the family owned manufacturing giant Bemis is celebrating 120 years of excellence and a merger of the Carrara & Matta brand!

After the acquisition by Bemis in 1999, Carrara & Matta continued its tradition of sophistication and quality. Now, it's going in style and merging with the Bemis range for an even better customer experience. Bemis thus becomes a unified brand with a complete assortment under one roof. For simplicity, more innovation, and a wider choice for your needs.

Given the 120th anniversary, a festive year of promotions and giveaways is before us. Visit the Bemis website or social channels to take part in the celebration!

TOILET SEAT FINDER	4 - 5
THERMOPLASTIC TOILET SEATS	7 - 19
DUROPLAST TOILET SEATS	20 - 31
MOULDED WOOD TOILET SEATS	32 - 37
C&M TO BEMIS - CROSS REFERENCE LIST	39 - 41

Page	Name	Part number	Colour	Material	Hinge	MQ	STD Pallet
8-9	Bemis Pure Clean™ Bidet Toilet Seat	9801BIDU000	White	Thermoplastic	Adjustable Plastic	5	135
10	Stirling Ultra-Fix® | British Standard 2	108030000	White	Thermoplastic	Adjustable Plastic	6	162
11	Shannon	108034000	White	Thermoplastic	Adjustable Plastic	6	162
12	Bemis Crewe ring only open front	108039T000	White	Thermoplastic	Adjustable Plastic	6	162
13	Jersey	108051000	White	Thermoplastic	Adjustable Plastic	10	150
13	Jersey	108051047	Black	Thermoplastic	Adjustable Plastic	10	150
14	Atlantic Spa	108052000	White	Thermoplastic	Adjustable Plastic	6	162
14	Atlantic Spa	108052047	Black	Thermoplastic	Adjustable Plastic	6	162
14	Atlantic Spa	108052153	Red	Thermoplastic	Adjustable Plastic	6	162
14	Atlantic Spa	108052604	Blue	Thermoplastic	Adjustable Plastic	6	162
15	Atlantic Spa Ultra-Fix®	108054000	White	Thermoplastic	Adjustable Chrome-plated	6	162
15	Atlantic Spa Ultra-Fix®	108054047	Black	Thermoplastic	Adjustable Chrome-plated	6	162
15	Atlantic Spa Ultra-Fix®	108054153	Chicago red	Thermoplastic	Adjustable Chrome-plated	6	162
15	Atlantic Spa Ultra-Fix®	108054604	Marine blue	Thermoplastic	Adjustable Chrome-plated	6	162
15	Atlantic Spa Ultra-Fix®	108054085	Slate grey	Thermoplastic	Adjustable Chrome-plated	6	162
16	Shannon Ultra-Fix	108055000	White	Thermoplastic	Adjustable Chrome-plated	6	162
17	Kensey Ultra-Fix®	108061000	White	Thermoplastic	Fixed Hybrid	6	162
17	Kensey Ultra-Fix®	108061104	Iron blue	Thermoplastic	Fixed Hybrid	6	162
18	Kent Ultra-Fix®	108065000	White	Thermoplastic	Adjustable Plastic	10	150
18	Kent Ultra-Fix®	108065047	Black	Thermoplastic	Adjustable Plastic	10	150
19	York Slow Close Ultra-Fix®	108070000	White	Thermoplastic	Adjustable Plastic	6	162
19	York Slow Close Ultra-Fix®	108070085	Slate grey	Thermoplastic	Adjustable Plastic	6	162

Bemis Ultra-Fix® - patented fixing system that will not loosen! Simple, "no mess" installation ensures your seat stays tight on the pan.

Speed nut - installs fast and easy

Top Fix - installs easily from the top of the ceramic.

Bottom Fix - standard fixation from the bottom of the ceramic.

Slow close prevents slamming and pinched fingers.

Take off for hygienic and convenient cleaning

Page	Name	Part number	Colour	Material	Hinge	MQ	STD Pallet
21	Arona Slow Close Take Off Top Fix	2060PB000	White	Duroplast	Adjustable Plastic	5	135
22	San Remo Slow Close Take Off Top Fix	2086CL000	White	Duroplast	Adjustable Plastic	5	135
23	Iril	2201ST000	White	Duroplast	Adjustable Stainless steel	7	168
24	Potenza	2202ST000	White	Duroplast	Adjustable Stainless steel	7	168
25	Pesaro	2205ST000	White	Duroplast	Adjustable Stainless steel	7	168
26	Teramo Square Slow Close Take Off Top Fix	2400CL000	White	Duroplast	Adjustable Stainless steel	5	120
27	Padua Top Fix (ring only)	3500PPTF000	White	Duroplast	Adjustable Plastic	5	135
29	Bemis Click & Clean® Slim	2310CNCTF000	White	Duroplast	Adjustable stainless steel	5	135
30	Bemis Click & Clean® Classic	2320CNCTF000	White	Duroplast	Adjustable stainless steel	5	135
31	Bemis Click & Clean® Silent	2350CNCTF000	White	Duroplast	Adjustable stainless steel	5	135
33	Proseat	340259000	White	Moulded Wood	Adjustable Plastic	6	162
34	Proseat Ultra-Fix®	340550000	White	Moulded Wood	Adjustable Plastic	6	162
34	Proseat Ultra-Fix®	340550047	Black	Moulded Wood	Adjustable Plastic	6	162
34	Proseat Ultra-Fix®	340550492	Whisper Grey	Moulded Wood	Adjustable Plastic	6	162
34	Proseat Ultra-Fix®	340550604	Marine Blue	Moulded Wood	Adjustable Plastic	6	162
35	Asti Slow Close Ultra-Fix®	340580000	White	Moulded Wood	Adjustable Chrome-plated	5	135
37	Canyon Slow Close Ultra-Fix®	340590000	White	Moulded Wood	Adjustable Chrome-plated	5	135
37	Danube Slow Close Ultra-Fix®	340900000	White	Moulded Wood	Adjustable Chrome-plated	5	135

MOULDED WOOD

The Bemis moulded wood toilet seats are made from a wood flour formula that creates a more consistent product than MDF. Responsibly and locally sourced wood, mostly coming from post-industrial byproducts, is processed in-house to give us the upmost quality control throughout the seat making process. Moulded wood seats are finished with environmentally friendly water-based paint with a high-gloss finish that gives a warm-to-the-touch feel.

THERMOPLASTIC

The Bemis thermoplastic toilet seats are manufactured to deliver a virtually unbreakable product that is versatile for any type of environment. Colourant is used within the plastic pellets, to create a consistent colour through every layer of the product, ensuring the colour will not fade or change over time. Because it is made using polypropylene, the ring and cover are both 100% recyclable.

DUROPLAST

Our duroplast toilet seats are manufactured carefully and finished with non-slip bumpers. Our long-lasting duroplast seats have a ceramic-like shine, fitting seamlessly into any bathroom environment. Duroplast is naturally heat resistant and will not scratch with standard use.

BEMIS ULTRA-FIX®

NO MORE LOOSE SEAT!

Commercial environments are some of the harshest environments for a bathroom. Toilet seats often break or work loose after a few short months, costing time and money.

The professional Ultra-Fix® fixing system is specifically developed to resist high pressure and prevent loosening.

HOW DOES IT WORK?

- The finned bushing eliminates the gap in the toilet mounting hole, preventing hinge movement.
- The hinge is developed to resist high pressure.
- The nut snaps off at the optimum tightening torque creating the perfect clamping force.

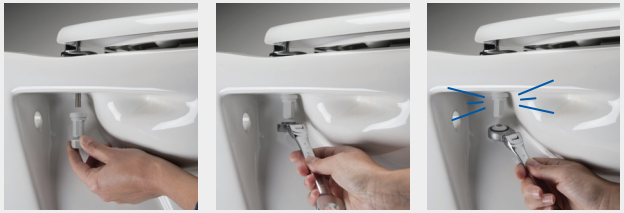

- ✓ The only seat in the market that can resist the 30 kg. side-pull test
- ✓ Lasts over 30,000 cycles in side-to-side testing
- ✓ No glue or adhesives leaving residue on your ceramic
- ✓ One-piece nut installs easily
- ✓ Resists corrosion

"Finally, a seat that does not move!"

with Bemis Ultra-Fix®

without Ultra-Fix®

"I was tired of buying toilet seats with bad fixings that continuously need to be re-worked"

Bemis United Kingdom

BEMIS Thermoplastic Toilet seats

Bemis Pure Clean™

Cleaning with water is a big part of our daily routines. We wash our hands repeatedly throughout the day, shower regularly and perform all kinds of household cleaning tasks using water. Why not use water during a toilet visit? The Bemis Pure Clean™ will make you feel as clean and fresh as though you have just taken a shower.

- Adjustable shower spray with double nozzle for female and posterior wash.
- Self-cleaning nozzle, automatically rinsed after each use.
- No electricity needed, makes it easy to install in any household.
- Slow close prevents slamming of the seat.
- Take off toilet seat for convenient and hygienic cleaning.
- Take off toilet seat for convenient and hygienic cleaning.

Soft & Hygienic

Cleaning with water is softer for the skin, calming and more hygienic then using paper only. Water does not contain any of the chemicals you can find in wet toilet tissues and can reduce symptoms of irritation. For people with a temporary or permanent disability a bidet toilet seat can be a great help in their personal hygiene combining the functions of a toilet and bidet.

Non-Electric

The Bemis bidet toilet seat works without electricity and is easy to use. The seat comes with an adjustable intensity shower spray and double nozzle for posterior and female wash. The shower spray nozzle rinses automatically after each use.

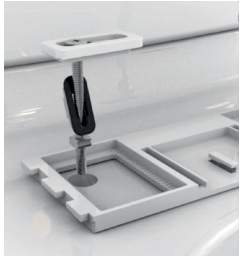

Bottom & Top Fixation

The seat is standard supplied with a bottom and top fixation kit. Bottom fixation includes the Bemis Ultra-Fix fixing system that will not loosen, ensuring your seat stays tight on the ceramic.

The bidet toilet seat is easy to maintain. The take-off function lets you remove the seat easily for convenient and hygienic cleaning. The Bemis Bidet toilet seat complies to EN1717 standards concerning the avoidance of contamination due to backflow.

The compact and discrete design adds style to your bathroom and make it look like a regular toilet seat. You can install the bidet toilet seat on your regular ceramic eliminating any extra space needed for a separate bidet, ideal for smaller bathrooms. You can connect the seat to your existing water supply; bathroom sink, toilet cistern supply or separate tap.

Quality products since 1901 Warranty 2 years*

Complies with the water safety guidelines of EN 1717

BEMIS PURE CLEAN™ BIDET TOILET SEAT
THERMOPLASTIC | 9801BIDU000

Features

- Adjustable shower spray.
- Self-cleaning nozzle, auto-rinses after each use.
- Non-electric.
- Bemis Ultra-Fix® bottom fixation ensures your seat stays tight on the pan.
- Slow close.
- Take off for easier and hygienic cleaning.
- Adjustable plastic hinge
- Top and bottom fixation included.

- Including installation template, 3-way valve and 0.8 meter water hose.
- Complies to the water safety guidelines of EN 1717.
- Suitable for all standard shape bowls with access to the water supply.

9801BIDU000

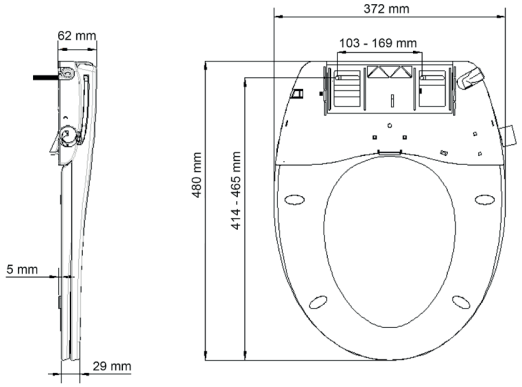

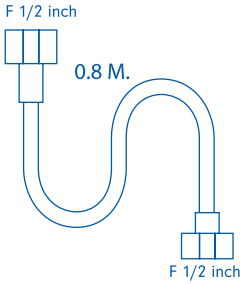

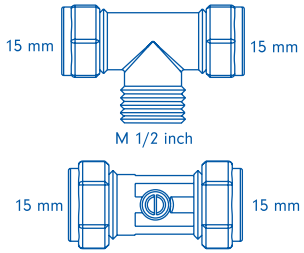

Name	Part number	Colour	Hinge	EAN	Ring bumper	Cover bumper	Weight	MQ	STD Pallet
Bemis Pure Clean Slow Close, Take Off Ultra-Fix®	9801BIDU000	White	Adjustable plastic	5012799282982	2	2	1.91	5	135

THERMOPLASTIC TOILET SEAT **STIRLING ULTRA-FIX®**
BRITISH STANDARD 2 | **108030000**

MANUFACTURED IN GREAT BRITAIN

Features

- Designed to meet the requirements of BS1254 Type 2.
- Bemis Ultra-Fix® - patented fixing system that will not loosen! Simple, "no mess" installation ensures your seat stays tight on the pan.
- Long-lasting thermoplastic is virtually unbreakable and recycable.
- Adjustable plastic hinge.

108030000

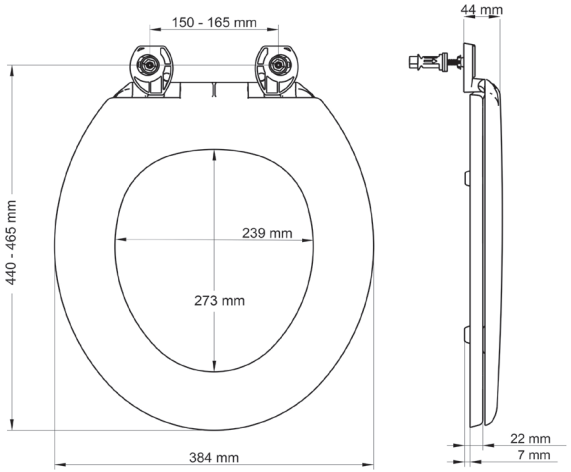

Bemis Ultra-Fix® prevents shifting

- ✓ Resists corrosion
- ✓ One-piece nut installs easily
- ✓ No glue or adhesives leaving residue on your ceramic
- ✓ Lasts over 30,000 cycles in side-to-side testing
- ✓ The only system in the market that resists the 30 kg. side-pull test

Name	Part number	Colour	Hinge	EAN	Ring bumper	Cover bumper	Weight	MQ	STD Pallet
Stirling BS2 Ultra-Fix®	108030000	White	Adjustable plastic	5012799285730	4	2	1.70 kg	6	162

www.bemisemea.com | Email: uksales@bemismfg.com | Tel.: +44 (0)1282 438 717

THERMOPLASTIC TOILET SEAT **SHANNON 108034000**

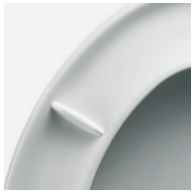

Features

- Take Off - for convenient and hygienic cleaning.
- Thermoplastic - provides superior durability and is a recyclable material.
- Virtually unbreakable.
- Adjustable chorme-plated hinge

108034000

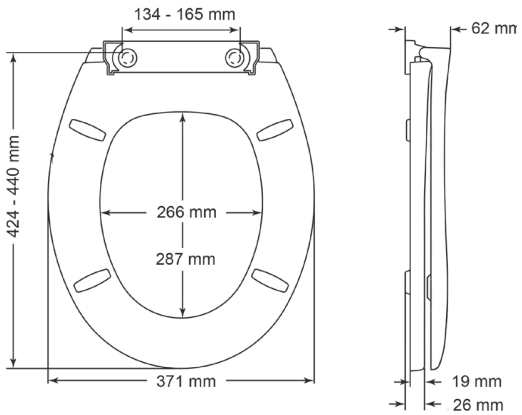

Name	Part number	Colour	Hinge	EAN	Ring bumper	Cover bumper	Weight	MQ	STD Pallet
Shannon	108034000	White	Adjustable plastic hinge	5012799285754	4	2	2.65 kg	6	162

MANUFACTURED IN GREAT BRITAIN

THERMOPLASTIC TOILET SEAT **CREWE ULTRA-FIX®**
108039T000

Features

- Bemis Ultra-Fix® - patented fixing system that will not loosen! Simple, "no mess" installation ensures your seat stays tight on the pan.
- Long-lasting thermoplastic is virtually unbreakable and recycable.
- Fixed hybrid hinge.

108039T000

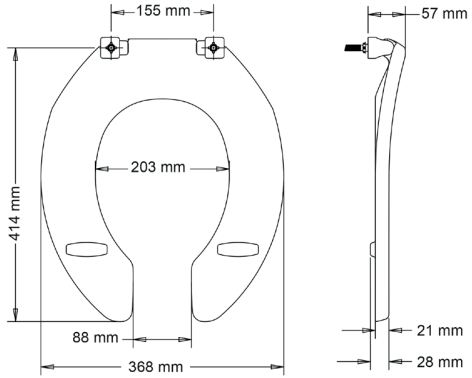

Bemis Ultra-Fix® prevents shifting

- ✓ Resists corrosion
- ✓ One-piece nut installs easily
- ✓ No glue or adhesives leaving residue on your ceramic
- ✓ Lasts over 30,000 cycles in side-to-side testing
- ✓ The only system in the market that resists the 30 kg. side-pull test

Name	Part number	Colour	Hinge	EAN	Ring bumper	Cover bumper	Weight	MQ	STD Pallet
Crewe Ultra-Fix® Ring only Open front	108039T000	White	Fixed hybrid	5012799284320	2	2	1.4 kg	6	162

www.bemisemea.com | Email: uksales@bemismfg.com | Tel.: +44 (0)1282 438 717

THERMOPLASTIC TOILET SEAT **JERSEY**
108051***

Features

- Long-lasting thermoplastic is virtually unbreakable and recyclable.
- Available with adjustable plastic hinge.

108051***

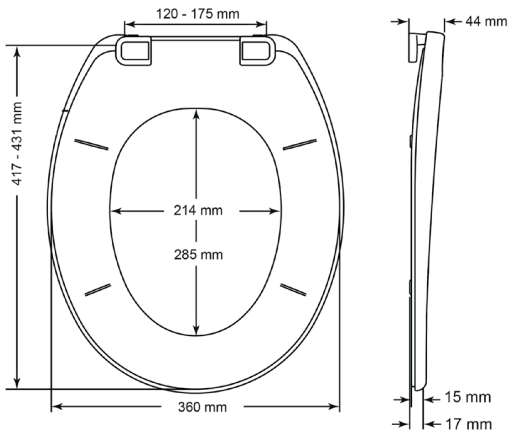

047 - Black

MANUFACTURED IN GREAT BRITAIN

Name	Part number	Colour	Hinge	EAN	Ring bumper	Cover bumper	Weight	MQ	STD Pallet
Jersey	108051000	White	Adjustable plastic	5012799284405	4	2	0.87 kg	10	150
Jersey	108051047	Black	Adjustable plastic	5012799284504	4	2	0.87 kg	10	150

THERMOPLASTIC TOILET SEAT **ATLANTIC SPA 108052*****

MANUFACTURED IN GREAT BRITAIN

Features

- Long-lasting thermoplastic is virtually unbreakable and recycable.
- Adjustable plastic hinge.

108052***

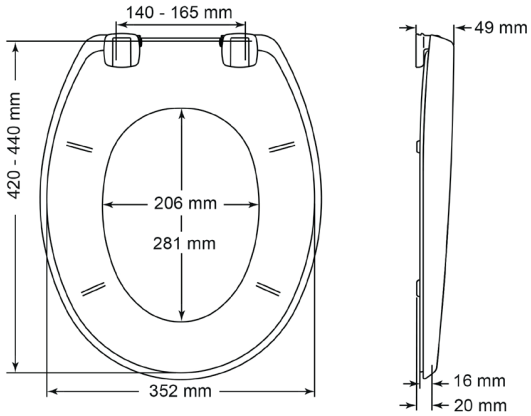

047 - Black 153 - Red 604 - Blue

Name	Part number	Colour	Hinge	EAN	Ring bumper	Cover bumper	Weight	MQ	STD Pallet
Atlantic Spa	108052 000	White	Adjustable plastic	5012799284382	4	2	1.5 kg	6	162
Atlantic Spa Black	108052 047	Black	Adjustable plastic	5012799285839	4	2	1.5 kg	6	162
Atlantic Spa Chicago Red	108052 153	Red	Adjustable plastic	5012799285853	4	2	1.5 kg	6	162
Atlantic Spa Marine Blue	108052 604	Blue	Adjustable plastic	5012799285877	4	2	1.5 kg	6	162

www.bemisemea.com | Email: uksales@bemismfg.com | Tel.: +44 (0)1282 438 717

THERMOPLASTIC TOILET SEAT **ATLANTIC SPA ULTRA-FIX®**
108054***

047 - Black

085 - Slate Grey

153 - Chicago Red

604 - Marine Blue

Features

- Bemis Ultra-Fix® - patented fixing system that will not loosen! Simple, "no mess" installation ensures your seat stays tight on the pan.
- Long-lasting thermoplastic is virtually unbreakable and recycable.
- Adjustable plastic hinge.

108054***

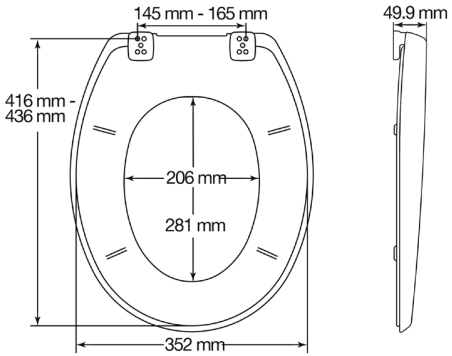

MANUFACTURED IN GREAT BRITAIN

Bemis Ultra-Fix® prevents shifting

- ✓ Resists corrosion
- ✓ One-piece nut installs easily
- ✓ No glue or adhesives leaving residue on your ceramic
- ✓ Lasts over 30,000 cycles in side-to-side testing
- ✓ The only system in the market that resists the 30 kg. side-pull test

Name	Part number	Colour	Hinge	EAN	Ring bumper	Cover bumper	Weight	MQ	STD Pallet
Atlantic Spa Ultra-Fix®	108054000	White	Adjustable chrome-plated	5012799284368	2	2	1.70 kg	6	162
Atlantic Spa Ultra-Fix®	108054047	Black	Adjustable chrome-plated	5012799285938	2	2	1.70 kg	6	162
Atlantic Spa Ultra-Fix®	108054085	Grey	Adjustable chrome-plated	5012799285952	2	2	1.70 kg	6	162
Atlantic Spa Ultra-Fix®	108054153	Red	Adjustable chrome-plated	5012799285976	2	2	1.70 kg	6	162
Atlantic Spa Ultra-Fix®	108054604	Blue	Adjustable chrome-plated	5012799284542	2	2	1.70 kg	6	162

THERMOPLASTIC TOILET SEAT **SHANNON ULTRA-FIX®**
108055000

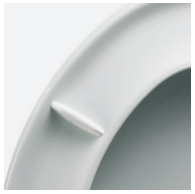

Features

- Bemis Ultra-Fix® - patented fixing system that will not loosen! Simple, "no mess" installation ensures your seat stays tight on the pan.
- Thermoplastic - provides superior durability and is a recyclable material.
- Virtually unbreakable.
- Adjustable chorme-plated hinge

108055000

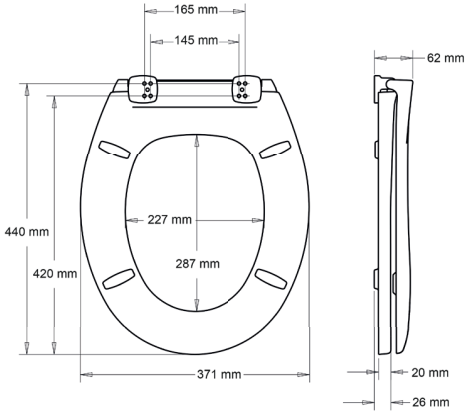

Bemis Ultra-Fix® prevents shifting

- ✓ Resists corrosion
- ✓ One-piece nut installs easily
- ✓ No glue or adhesives leaving residue on your ceramic
- ✓ Lasts over 30,000 cycles in side-to-side testing
- ✓ The only system in the market that resists the 30 kg. side-pull test

Name	Part number	Colour	Hinge	EAN	Ring bumper	Cover bumper	Weight	MQ	STD Pallet
Shannon Ultra-Fix®	108055000	White	Adjustable chrome-plated	5012799285990	4	2	2.85 kg	6	162

MANUFACTURED IN GREAT BRITAIN

www.bemisemea.com | Email: uksales@bemismfg.com | Tel.: +44 (0)1282 438 717

THERMOPLASTIC TOILET SEAT **KENSEY ULTRA-FIX®**
108061000

Features

- Bemis Ultra-Fix® - patented fixing system that will not loosen! Simple, "no mess" installation ensures your seat stays tight on the pan.
- Long-lasting thermoplastic is virtually unbreakable and recycable.
- Fixed hybrid hinges.
- Available in White and Iron Blue colour.
- Fits majority of manufacturers' universal shaped pans.

108061000

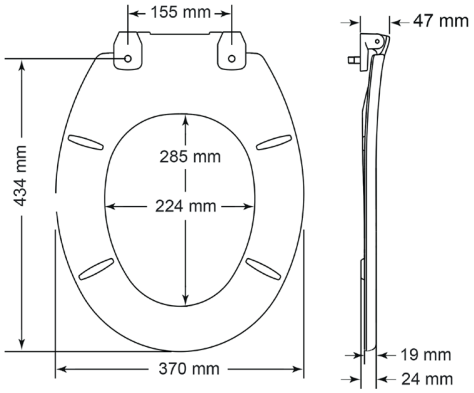

104 - Iron Blue

Bemis Ultra-Fix® prevents shifting

- ✓ Resists corrosion
- ✓ One-piece nut installs easily
- ✓ No glue or adhesives leaving residue on your ceramic
- ✓ Lasts over 30,000 cycles in side-to-side testing
- ✓ The only system in the market that resists the 30 kg. side-pull test

Name	Part number	Colour	Hinge	EAN	Ring bumper	Cover bumper	Weight	MQ	STD Pallet
Kensey Ultra-Fix®	108061000	White	Standard stainless steel/ plastic	5012799284443	4	-	1.15 kg	6	162
Kensey Ultra-Fix® Iron Blue	108061104	Iron blue	Standard stainless steel/ plastic	5012799286010	4	-	1.15 kg	6	162

THERMOPLASTIC TOILET SEAT **KENT ULTRA-FIX®**
108065***

047 - Black

Features

- Bemis Ultra-Fix® - patented fixing system that will not loosen! Simple, "no mess" installation ensures your seat stays tight on the pan.
- Long-lasting thermoplastic is virtually unbreakable and recyclable.
- Adjustable plastic hinge.

108065***

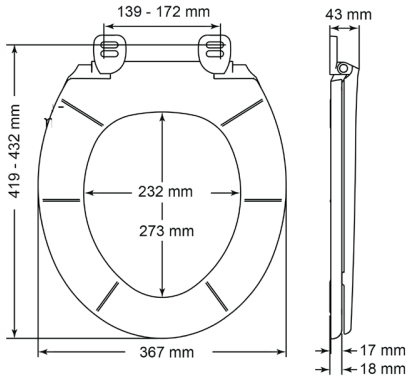

MANUFACTURED IN GREAT BRITAIN

Bemis Ultra-Fix® prevents shifting

- ✓ Resists corrosion
- ✓ One-piece nut installs easily
- ✓ No glue or adhesives leaving residue on your ceramic
- ✓ Lasts over 30,000 cycles in side-to-side testing
- ✓ The only system in the market that resists the 30 kg. side-pull test

Name	Part number	Colour	Hinge	EAN	Ring bumper	Cover bumper	Weight	MQ	STD Pallet
Kent Ultra-Fix®	108065000	White	Adjustable plastic	5012799284467	6	2	0.96 kg	10	150
Kent Ultra-Fix®	108065047	Black	Adjustable plastic	5012799286058	6	2	0.96 kg	10	150

www.bemisemea.com | Email: uksales@bemismfg.com | Tel.: +44 (0)1282 438 717

THERMOPLASTIC TOILET SEAT **YORK SLOW CLOSE ULTRA-FIX®**
108070***

Features

- Bemis Ultra-Fix® - patented fixing system that will not loosen! Simple, "no mess" installation ensures your seat stays tight on the pan.
- Slow close prevents slamming and pinched fingers.
- Long-lasting thermoplastic is virtually unbreakable and recycable.
- Adjustable plastic hinge.

108070*** 0580PLT085

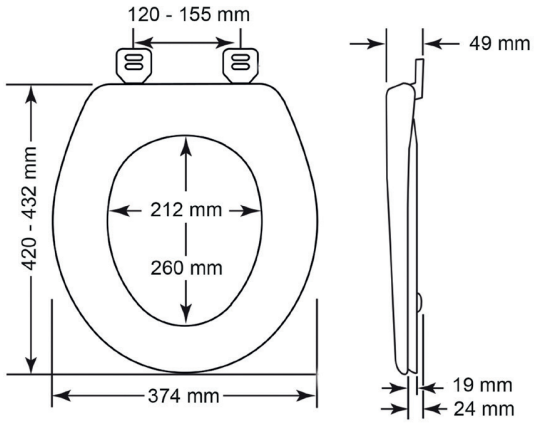

Bemis Ultra-Fix® prevents shifting

- ✓ Resists corrosion
- ✓ One-piece nut installs easily
- ✓ No glue or adhesives leaving residue on your ceramic
- ✓ Lasts over 30,000 cycles in side-to-side testing
- ✓ The only system in the market that resists the 30 kg. side-pull test

0580PLT085 - Slate Grey

Name	Part number	Colour	Hinge	EAN	Ring bumper	Cover bumper	Weight	MQ	STD Pallet
York Slow Close Ultra-Fix®	108070000	White	Adjustable plastic	5012799279609	2	2	1.25 kg	6	162
Upton Slow Close Ultra-Fix®	0580PLT085	Slate Grey	Adjustable plastic	5012799282678	2	2	1.25 kg	6	162

BEMIS Duroplast Toilet seats

DUROPLAST TOILET SEAT **ARONA SLOW CLOSE TAKE OFF 2060PB000**

Features

- Slow Close - closes slowly and quietly.
- Take Off - push-button take off system for hygienic cleaning.
- Top Fix - installs easily from the top of the pan.
- Long-lasting Duroplast plastic is scratch and heat resistant and offers a ceramic-like shine.
- Adjustable plastic hinge.

2086CL000

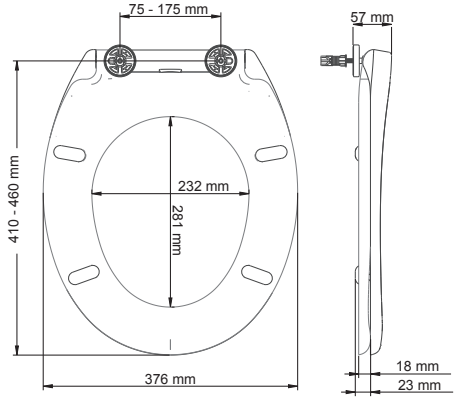

Name	Part number	Colour	Hinge	EAN	Ring bumper	Cover bumper	Weight	MQ	STD Pallet
Arona Slow Close Take Off, Top Fix	2060PB000	White	Adjustable plastic	5012799280551	4	2	2.1 kg	5	135

DUROPLAST TOILET SEAT **SAN REMO SLOW CLOSE TAKE OFF 2086CL000**

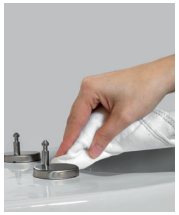

Features

- Slow Close - closes slowly and quietly.
- Take Off - push-button take off system for hygienic cleaning.
- Top Fix - installs easily from the top of the pan.
- Long-lasting Duroplast plastic is scratch and heat resistant and offers a ceramic-like shine.
- Adjustable stainless steel hinge.

2086CL000

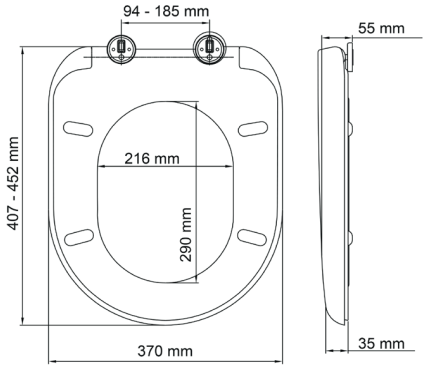

Name	Part number	Colour	Hinge	EAN	Ring bumper	Cover bumper	Weight	MQ	STD Pallet
San Remo Slow Close Take Off, Top Fix	2086CL000	White	Adjustable stainless steel	5012799280278	4	2	2.16 kg	5	135

www.bemisemea.com | Email: uksales@bemismfg.com | Tel.: +44 (0)1282 438 717

NEW

DUROPLAST TOILET SEAT **IRIL 2201ST000**

Features

- Long-lasting Duroplast plastic is scratch and heat resistant and offers a ceramic-like shine.
- Adjustable stainless steel hinge.
- Speed nut fixation

2201ST000

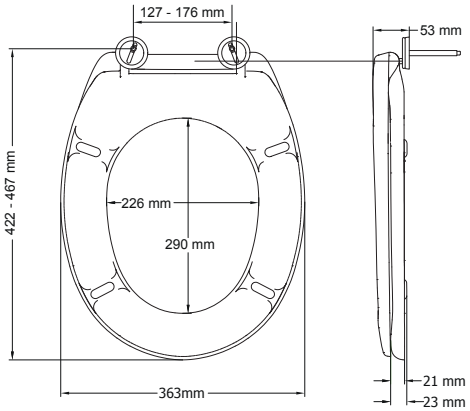

Name	Part number	Colour	Hinge	EAN	Ring bumper	Cover bumper	Weight	MQ	STD Pallet
Iril	2201ST000	White	Adjustable stainless steel	5012799281909	4	2	1.80 kg	7	168

NEW

DUROPLAST TOILET SEAT **POTENZA 2202ST000**

Features

- Long-lasting Duroplast plastic is scratch and heat resistant and offers a ceramic-like shine.
- Adjustable stainless steel hinge.
- Speed nut fixation

2202ST000

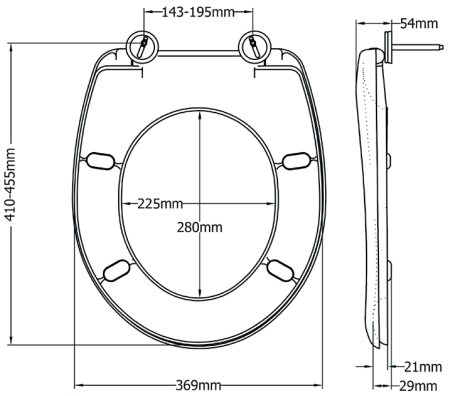

Name	Part number	Colour	Hinge	EAN	Ring bumper	Cover bumper	Weight	MQ	STD Pallet
Potenza	2202ST000	White	Adjustable stainless steel	5012799281916	4	2	1.8 kg	7	168

www.bemisemea.com | Email: uksales@bemismfg.com | Tel.: +44 (0)1282 438 717

NEW

DUROPLAST TOILET SEAT **PESARO 2205ST000**

Features

- Long-lasting Duroplast plastic is scratch and heat resistant and offers a ceramic-like shine.
- Adjustable stainless steel hinge.
- Speed nut fixation

2205ST000

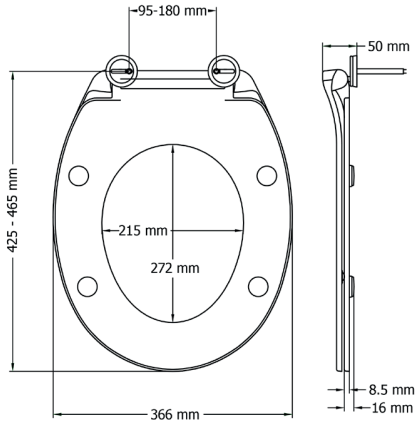

Name	Part number	Colour	Hinge	EAN	Ring bumper	Cover bumper	Weight	MQ	STD Pallet
Pesaro	2205ST000	White	Adjustable stainless steel	5012799282067	4	2	2.34 kg	7	168

NEW

DUROPLAST TOILET SEAT **TERAMO SQUARE SLOW CLOSE TAKE OFF 2400CL000**

Features

- Slow Close - closes slowly and quietly.
- Take Off - push-button take off system for hygienic cleaning.
- Top Fix - installs easily from the top of the ceramic.
- Long-lasting Duroplast plastic is scratch and heat resistant and offers a ceramic-like shine.
- Adjustable stainless steel hinge.

2400CL000

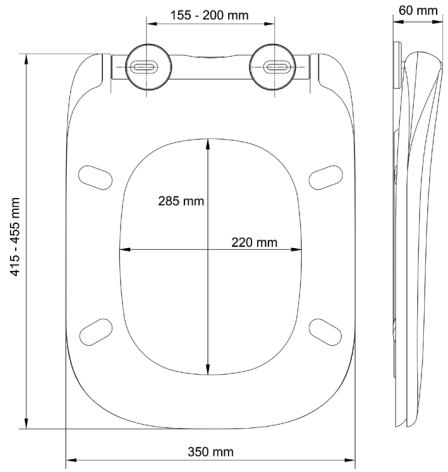

Name	Part number	Colour	Hinge	EAN	Ring bumper	Cover bumper	Weight	MQ	STD Pallet
Teramo Square Slow Close Take Off, Top Fix	2400CL000	White	Adjustable stainless steel	5012799283033	4	2	2.82 kg	5	120

www.bemisemea.com | Email: uksales@bemismfg.com | Tel.: +44 (0)1282 438 717

NEW

DUROPLAST TOILET SEAT **PADUA TOP FIX 3500PPTF000**

Features

- Long-lasting Duroplast plastic is scratch and heat resistant and offers a ceramic-like shine.
- Adjustable plastic hinge.
- Fixation from the top of the ceramic.

3500PPTF000

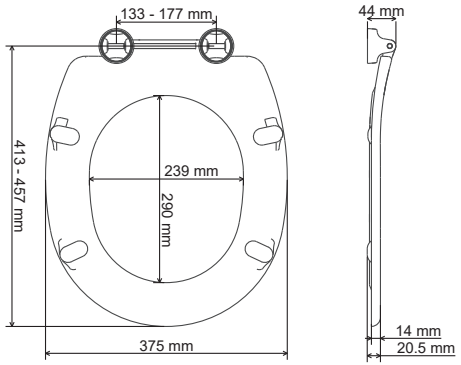

Name	Part number	Colour	Hinge	EAN	Ring bumper	Cover bumper	Weight	MQ	STD Pallet
Padua Top Fix	3500PPTF000	White	Adjustable plastic	5012799282944	4	-	1.4 kg	5	120

BEMIS
CLICK & CLEAN®
TOILET SEAT
ANTIBACTERIAL*
Antibacterieel - Antibakteriell - Antibacteriano - Antibactérien - Antibakterijski - Antibatterico

NEW

BEMIS CLICK & CLEAN® SLIM
DUROPLAST TOILET SEAT | 2310CNCTF000

Features

- Slow close prevents slamming and pinched fingers.
- Bemis Click & Clean® easy take off for convenient cleaning.
- Antibacterial treatment inhibits the growth of bacteria.
- Long-lasting Duroplast plastic is scratch and heat resistant and offers a ceramic-like shine.
- Adjustable stainless steel hinge.
- Fixation from the top of the ceramic.

2310CNCTF000

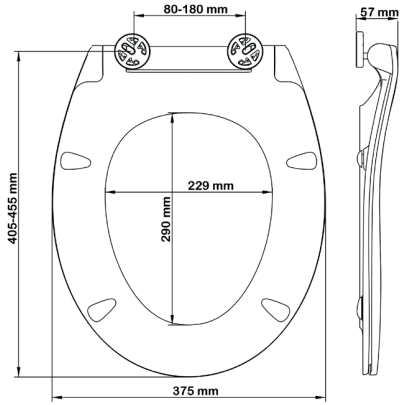

Name	Part number	Colour	Hinge	EAN	Ring bumper	Cover bumper	Weight	MQ	STD Pallet
Bemis Click & Clean® Slim	2310CNCTF000	White	Adjustable stainless steel top fix	5012799287253	4	2	2.2 kg	5	135

NEW

BEMIS CLICK & CLEAN® CLASSIC
DUROPLAST TOILET SEAT | 2320CNCTF000

Features

- Slow close prevents slamming and pinched fingers.
- Bemis Click & Clean® easy take off for convenient cleaning.
- Antibacterial treatment inhibits the growth of bacteria.
- Treated article containing biocidal product with active substance: Pyrithione zinc
- Long-lasting Duroplast plastic is scratch and heat resistant and offers a ceramic-like shine.
- Adjustable stainless steel hinge.
- Fixation from the top of the ceramic.

2320CNCTF000

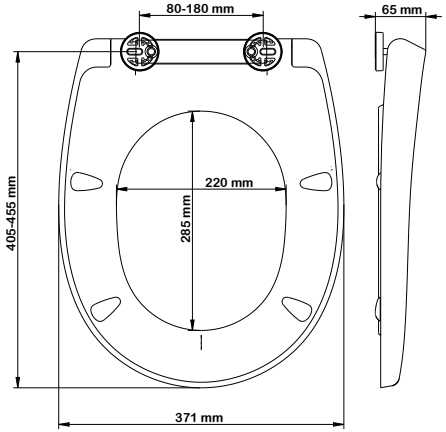

Name	Part number	Colour	Hinge	EAN	Ring bumper	Cover bumper	Weight	MQ	STD Pallet
Bemis Click & Clean® Classic	2320CNCTF000	White	Adjustable stainless steel top fix	5012799282203	4	2	2.4 kg	5	135

NEW

BEMIS CLICK & CLEAN® SILENT
DUROPLAST TOILET SEAT | 2350CNCTF000

Features

- Ultra quiet, sound reducing seal (Closed ring and cover).
- Hygiene improving, retains water droplets inside the ceramic (Closed ring and cover).
- Antibacterial treatment inhibits the growth of bacteria.
- Treated article containing biocidal product with active substance: Pyrithione zinc.
- Anti-slip seal for a secure grip on the ceramic.
- Slow close prevents slamming and pinched fingers.
- Bemis Click & Clean® easy take off for convenient cleaning.
- Long-lasting Duroplast plastic is scratch and heat resistant and offers a ceramic-like shine.
- Adjustable stainless steel hinge.
- Fixation from the top of the ceramic.

2350CNCTF000

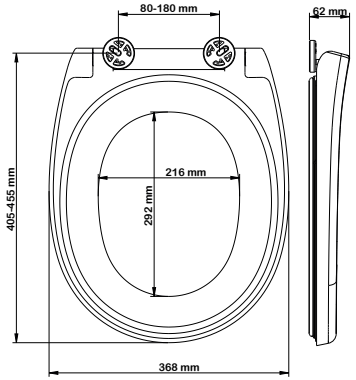

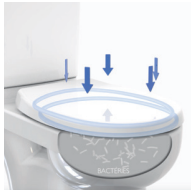

Name	Part number	Colour	Hinge	EAN	Ring bumper	Cover bumper	Weight	MQ	STD Pallet
Bemis Click & Clean® Silent	2350CNCTF000	White	Adjustable stainless steel top fix	5012799282258	4	2	2.9 kg	5	135

BEMIS Moulded Wood Toilet seats

MOULDED WOOD TOILET SEAT **PROSEAT 340259000**

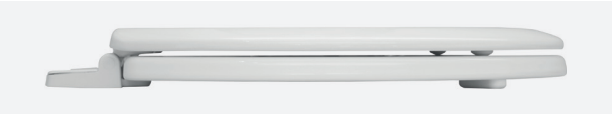

Features

- Environmentally Friendly Moulded Wood - made with responsibly sourced woods and water-based paints.
- Adjustable plastic hinge.

340259000

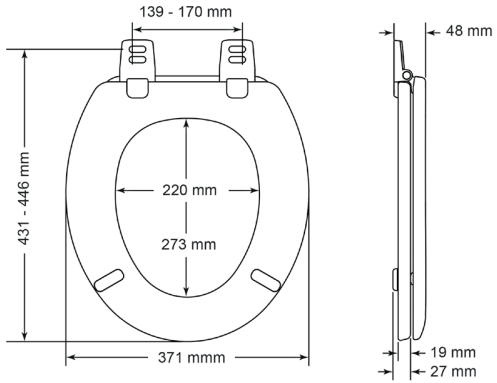

Name	Part number	Colour	Hinge	EAN	Ring bumper	Cover bumper	Weight	MQ	STD Pallet
Proseat	340259000	White	Adjustable plastic	5012799284610	2	2	2.63 kg	6	162

MOULDED WOOD TOILET SEAT **PROSEAT ULTRA-FIX®**
340550000

Features

- Bemis Ultra-Fix® - patented fixing system that will not loosen! Simple, "no mess" installation ensures your seat stays tight on the pan.
- Environmentally Friendly Moulded Wood - made with responsibly sourced woods and water-based paints.
- Adjustable plastic hinge.

340550000

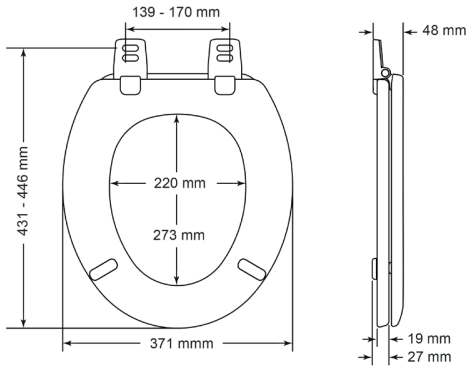

Bemis Ultra-Fix® prevents shifting

- ✓ Resists corrosion
- ✓ One-piece nut installs easily
- ✓ No glue or adhesives leaving residue on your ceramic
- ✓ Lasts over 30,000 cycles in side-to-side testing
- ✓ The only system in the market that resists the 30 kg. side-pull test

5000ART047 - Black

340550492 - Whisper Grey

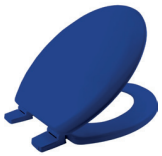

340550604 - Marine Blue

Name	Part number	Colour	Hinge	EAN	Ring bumper	Cover bumper	Weight	MQ	STD Pallet
Proseat Ultra-Fix®	340550000	White	Adjustable plastic	5012799284658	2	2	2.7 kg	6	162
Chicago Ultra-Fix®	5000ART047	Black	Adjustable plastic	5012799279135	2	2	2.7 kg	6	162
Proseat Ultra-Fix®	340550492	Whisper Grey	Adjustable plastic	5012799286287	2	2	2.7 kg	6	162
Proseat Ultra-Fix®	340550604	Marine Blue	Adjustable plastic	5012799286300	2	2	2.7 kg	6	162

www.bemisemea.com | Email: uksales@bemismfg.com | Tel.: +44 (0)1282 438 717

MOULDED WOOD TOILET SEAT **ASTI**
340580000

Features

- Bemis Ultra-Fix® - patented fixing system that will not loosen! Simple, "no mess" installation ensures your seat stays tight on the pan.
- Slow Close - closes slowly and quietly.
- Non-Slip Bumpers - provide extra grip so the seat stays securely on the pan.
- Environmentally Friendly Moulded Wood - made with responsibly sourced woods and water-based paints.
- Adjustable chrome-plated hinges.

340580000

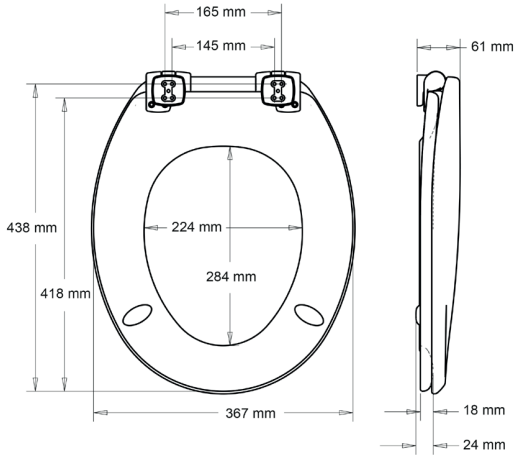

Bemis Ultra-Fix® prevents shifting

- ✓ Resists corrosion
- ✓ One-piece nut installs easily
- ✓ No glue or adhesives leaving residue on your ceramic
- ✓ Lasts over 30,000 cycles in side-to-side testing
- ✓ The only system in the market that resists the 30 kg. side-pull test

Name	Part number	Colour	Hinge	EAN	Ring bumper	Cover bumper	Weight	MQ	STD Pallet
Asti Slow Close Ultra-Fix®	340580000	White	Adjustable chrome-plated	5012799286386	2	2	3.31 kg	5	135

MOULDED WOOD TOILET SEAT **CANYON ULTRA-FIX®**
340590000

Features

- Bemis Ultra-Fix® - patented fixing system that will not loosen! Simple, "no mess" installation ensures your seat stays tight on the pan.
- Slow Close - closes slowly and quietly.
- Environmentally Friendly Moulded Wood - made with responsibly sourced woods and water-based paints.
- Adjustable chrome-plated hinges.

340590000

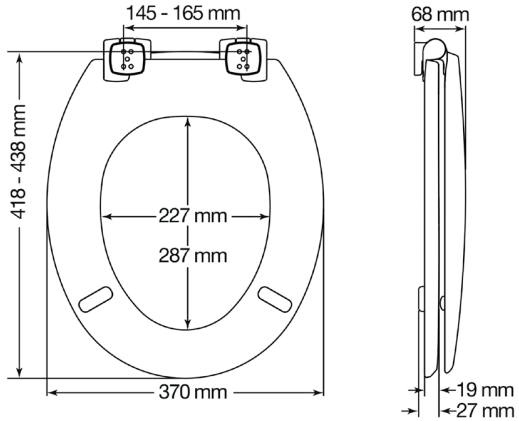

Bemis Ultra-Fix® prevents shifting

- ✓ Resists corrosion
- ✓ One-piece nut installs easily
- ✓ No glue or adhesives leaving residue on your ceramic
- ✓ Lasts over 30,000 cycles in side-to-side testing
- ✓ The only system in the market that resists the 30 kg. side-pull test

Name	Part number	Colour	Hinge	EAN	Ring bumper	Cover bumper	Weight	MQ	STD Pallet
Canyon Slow Close Ultra-Fix®	340590000	White	Adjustable chrome-plated	5012799284757	2	2	3.00 kg	5	135

MOULDED WOOD TOILET SEAT **DANUBE ULTRA-FIX®**
340900000

Features

- Bemis Ultra-Fix® - patented fixing system that will not loosen! Simple, "no mess" installation ensures your seat stays tight on the pan.
- Slow Close - closes slowly and quietly.
- Environmentally Friendly Moulded Wood - made with responsibly sourced woods and water-based paints.
- Adjustable chrome-plated hinge.

340900000

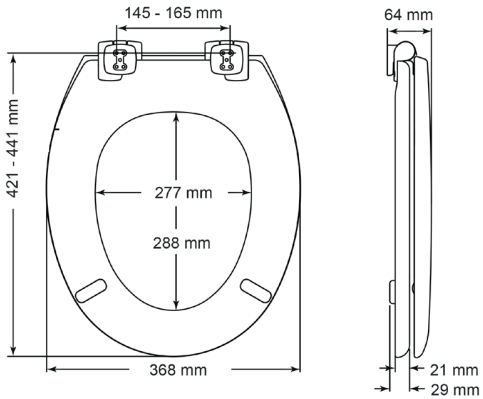

Bemis Ultra-Fix® prevents shifting

- ✓ Resists corrosion
- ✓ One-piece nut installs easily
- ✓ No glue or adhesives leaving residue on your ceramic
- ✓ Lasts over 30,000 cycles in side-to-side testing
- ✓ The only system in the market that resists the 30 kg. side-pull test

Name	Part number	Colour	Hinge	EAN	Ring bumper	Cover bumper	Weight	MQ	STD Pallet
Danube Slow Close Ultra-Fix®	340900000	White	Adjustable chrome-plated	5012799287161	2	2	3.31 kg	5	135

CREME MAINS THE MOIS
HAND CREAM BLACK TEA
SAVON LIQUIDE
LIQUID SOAP
THE BLANC
WHITE TEA

CARRARA & MATTA TO BEMIS
CROSS REFERENCE LIST

THERMOSET			
CM PART NUMBER	**CM DESCRIPTION**	**BEMIS PART NUMBER**	**BEMIS DESCRIPTION**
100835000	BEMIS FERNO - blanc inner carton UK	2060PB000	TSET BEMIS ARONA SLOW CLOSE TO TF WHITE
100522000	TSET BEMIS MILLIE TOP ST WHITE	2006ST000	TSET BEMIS 2006 ST WHITE
100452000	TSET BEMIS NORD ST WHITE	2009ST000	TSET NORD PLUS INOX BIANCO 000
100459000	TSET BEMIS NORD SILENTIUM CL WHITE	2019CL000	TSET BEMIS 2019 SILENTIUM CL WHITE
100120000	TSET BEMIS PAVIA BPB STA-TITE SC TF WHT	2070PB000	TSET BEMIS NAPLES BPB STA-TITE SC TO TF WHITE
100830000	TSET BEMIS UNIVERSAL RAVENNA D SHAPE SLOW CLOSE WHITE	2086CL000	TSET BEMIS SANREMO SLOW CLOSE TO TF WHITE
100597000	TSET BEMIS FIRENZE SILENTIUM STATITE WHITE	2082CLT000	TSET BEMIS 2082 SILENTIUM STATITE CL WHITE
100597000	TSET BEMIS FIRENZE SILENTIUM STATITE WHITE	2082WCLT000	TSET BEMIS 2082W SILENTIUM STATITE CL WHITE

PLASTIC			
CM PART NUMBER	**CM DESCRIPTION**	**BEMIS PART NUMBER**	**BEMIS DESCRIPTION**
108051000	PLAS BEMIS JERSEY PL WHITE	108051000	PLAS BEMIS JERSEY PL WHITE
108051047	PLAS BEMIS JERSEY PL BLACK	108051047	PLAS BEMIS JERSEY PL BLACK
108057000	PLAS BEMIS JERSEY PL MULTIPACK WHITE	108057000	PLAS BEMIS JERSEY PL MULTIPACK WHITE
108067000	PLAS BEMIS JERSEY STXT STA-TITE WHITE	108067000	PLAS BEMIS JERSEY STATITE PL WHITE
108056047	PLAS BEMIS JERSEY ST BLACK	108056047	PLAS BEMIS JERSEY ST BLACK
108070000	PLAS BEMIS YORK STA-TITE SLOW CLOSE PLT WHITE	108070000	PLAS BEMIS YORK ULTRA-FIX SLOW CLOSE PLT WHITE
108070000	PLAS BEMIS YORK STA-TITE SLOW CLOSE PLT WHITE	0580PLT000	PLAS BEMIS UPTON ULTRA-FIX SLOW CLOSE PLT WHITE
108070000	PLAS BEMIS YORK STA-TITE SLOW CLOSE PLT WHITE	0580PLT000	PLAS BEMIS UPTON ULTRA-FIX SLOW CLOSE PLT WHITE
108052000	PLAS BEMIS ATLANTIC SPA PL WHITE	2850TP000	PLAS BEMIS 2850 BUXTON PL WHITE
108052000	PLAS BEMIS ATLANTIC SPA PL WHITE	108052000	PLAS BEMIS ATLANTIC SPA PL WHITE
108053000	PLAS BEMIS ATLANTIC SPA CP WHITE	108053000	PLAS BEMIS ATLANTIC SPA CP WHITE
108054000	PLAS BEMIS ATLANTIC SPA CP STATITE WHITE	108054000	PLAS BEMIS ATLANTIC SPA ULTRA-FIX WHIT
108054000	PLAS BEMIS ATLANTIC SPA CP STATITE WHITE	2850CPT000	PLAS BEMIS 2850 BUXTON ULTRA-FIX WHITE
108054047	PLAS BEMIS ATLANTIC SPA CP STATITE BLACK	108054047	PLAS BEMIS ATLANTIC SPA ULTRA-FIXBLACK
108054047	PLAS BEMIS ATLANTIC SPA CP STATITE BLACK	2850CPT047	PLAS BEMIS 2850 BUXTON ULTRA-FIX BLACK
108055000	PLAS BEMIS SHANNON STATITE CP WHITE	3900CPT000	PLAS BEMIS OXFORD ULTRA-FIXCP WHITE

108065000	PLAS BEMIS KENT STA-TITE PL WHITE	108065000	PLAS BEMIS KENT ULTRA-FIX PL WHITE
108065000	PLAS BEMIS KENT STA-TITE PL WHITE	7210ART000	PLAS BEMIS 7200 CHESTER ULTRA-FIX PL WHITE
108059000	PLAS BEMIS KENT TOP-FIX PL WHITE	108059000	PLAS BEMIS KENT TOP-FIX PL WHITE
108059000	PLAS BEMIS KENT TOP-FIX PL WHITE	7220AR000	PLAS BEMIS 7200 PL WHITE (BLIND HOLE)
MOULDED WOOD			
C&M PART NUMBER	**C&M DESCRIPTION**	**BEMIS PART NUMBER**	**BEMIS DESCRIPTION**
340540000	MLDW C&M NILE CC PL WHITE	340540000	MLDW BEMIS NILE CC PL WHITE
340180000	MLDW BEMIS DANUBE CP WHITE	4100CP000	MLDW BEMIS 4100 CP WHITE
340600000	MLDW BEMIS DANUBE STATITE CP WHITE	4100CPT000	MLDW BEMIS 4100 ULTRA-FIX CP WHITE
340300000	MLDW BEMIS DANUBE SIL CL WHITE	4100CL000	SEDILE 4100CL BIANCO 000
340900000	MLDW BEMIS DANUBE SIL STA-TITE WHITE	4100CLT000	MLDW BEMIS 4100 ULTRA-FIX CL WHITE
340385000	MLDW BEMIS 4403 ALBA STATITE CP WHITE	4403CPT000	MLDW BEMIS 4403 ALBA ULTRA-FIX CP WHITE
340550000	MLDW BEMIS PROSEAT STATITE PL WHITE	5000ART000	MLDW BEMIS CHICAGO 5000 STATITE PL WHITE
340550000	MLDW BEMIS PROSEAT STATITE PL WHITE	340550000	MLDW BEMIS PROSEAT ULTRA-FIX WHITE
340259000	MLDW BEMIS PROSEAT PL WHITE	340259000	MLDW BEMIS PROSEAT PL WHITE
340259000	MLDW BEMIS PROSEAT PL WHITE	5000AR000	MLDW BEMIS 5000 PL WHITE
340259000	MLDW BEMIS PROSEAT PL WHITE	5000AR000	MLDW BEMIS 5000 PL WHITE
340259766	AM IN PROSEAT* SOFT CREUK 766	5000AR756	SEDILE UNIVERSALE 5000 CHAMPAG 756
340259766	AM IN PROSEAT* SOFT CREUK 766	340259766	AM IN PROSEAT* SOFT CREUK 766
340340000	MLDW BEMIS PROSEAT AEL WHITE	340340000	AM IN PROSEAT AEL BIANCO 000
340340000	MLDW BEMIS PROSEAT AEL WHITE	5000EL000	MLDW BEMIS 5000EL PL WHITE
340341000	MLDW BEMIS PROSEAT STATITE ELT WHITE	5000ELT000	
340341000	MLDW BEMIS PROSEAT STATITE ELT WHITE	340341000	MLDW BEMIS PROSEAT ULTRA-FIX ELT WHITE
340615000	MLDW BEMIS PROSEAT STATITE CHROME EL WHITE	5000CELT000	
340615000	MLDW BEMIS PROSEAT STATITE CHROME EL WHITE	340615000	MLDW BEMIS PROSEAT ULTRA-FIX CHROME EL WHITE
340260000	MLDW BEMIS ELWOOD SLOW CLOSE TF WHITE - master carton	5017CL000	MLDW BEMIS ELWOOD SLOW CLOSE TF WHITE
340590000	MLDW BEMIS CANYON STATITE CL WHITE	5050CLT000	MLDW BEMIS CANYON STATITE CL WHITE
340110000	MLDW BEMIS CANYON CP WHITE	5050CP000	SEDILE UNIVERSALE 5050CP BIANCO 000
340261000	MLDW BEMIS JACKSON SLOW CLOSE TF WHITE	5501QCL000	MLDW FSC BEMIS OAKLAND SLOW CLOSE TF WHITE

BEMIS®

INNOVATION FOR EVERYDAY LIFE®

Tel: +44 (0) 1282 438717
Fax: +44 (0) 1282 412717
E-mail: uksales@bemismfg.com

Bemis Manufacturing Company © 2022-V4

All information is correct at time of going to print. Colours may vary due to limitations in printing processes.