Safety information

⚠ WARNING:

- Only qualified professionals should handle electrical wiring/devices.
- Install and use this product in accordance with applicable electrical codes and regulations in your region.
- The device is designed for indoor use in dry locations only.
- Keep this manual as it contains important technical data, testing, and troubleshooting information which may be useful after installation is complete.
- The IQ Power Switch-PG is not compatible with standard 3-way or 4-way switches.
- Do not attempt to disassemble the product or make repairs yourself. Doing so may result in electric shock and void the limited warranty.
- Do not exceed the maximum rated power of this device. For further information, see Specifications.
- If you require assistance, contact our after-sales services.
- Make sure to use this product together with a 15A circuit breaker.
- Do not use smart lights and smart bulbs with the IQ Dimmer-PG.
- Aluminium wiring is not compatible with the IQ Power Switch PG. Do not use aluminium wiring when you install the IQ Power Switch PG.

Overview

The IQ Power Switch-PG is a wireless smart device that lets you control your indoor lighting remotely through your control panel. For panels that are compatible with the IQ Power Switch-PG, see https://bit.ly/3PwPksX.

Figure 1: Overview

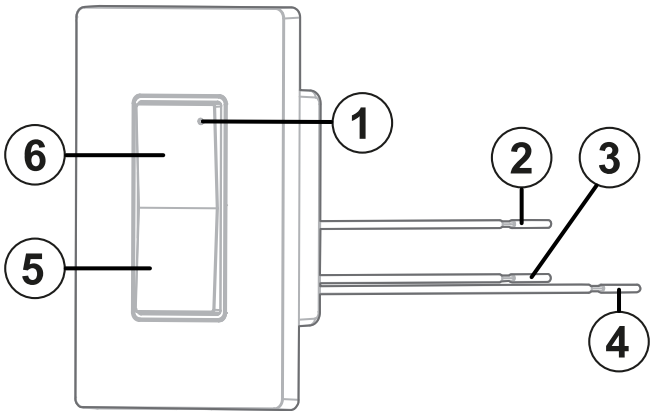

Callout	Description
1	LED indicator

Callout	Description
2	Load wire colored red
3	Neutral wire colored white
4	Line (hot) wire colored black
5	Off button
6	On button

Installing the device

⚠ **WARNING:** Before installing the device, make sure that the electrical supply to the area is turned off. Failure to do so may result in electric shock or serious injury.

ⓘ **Note:** This device uses copper alloys in the terminal. Do not install with aluminium wiring.

1. Turn off the power at the circuit breaker.
2. Remove the existing switch and connect the new switch according to Figure 2 and Figure 3.

Figure 2: Wiring diagram

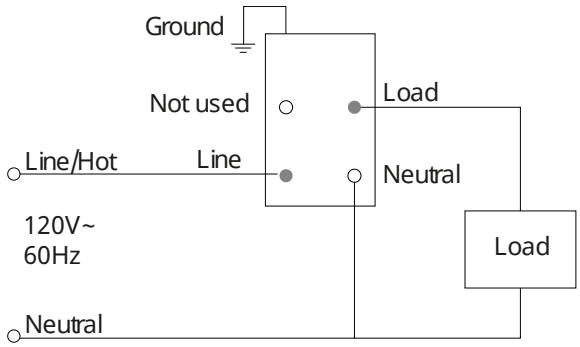

Figure 3: Connecting the switch

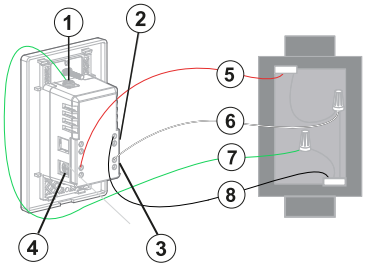

Callout	Description
1	Line wire (hot) coloured black
2	Neutral wire coloured white
3	Ground wire coloured green
4	Load wire coloured red

3. Mount the switch with the screws and attach the faceplate, see Figure 4.

Figure 4: Mounting the switch

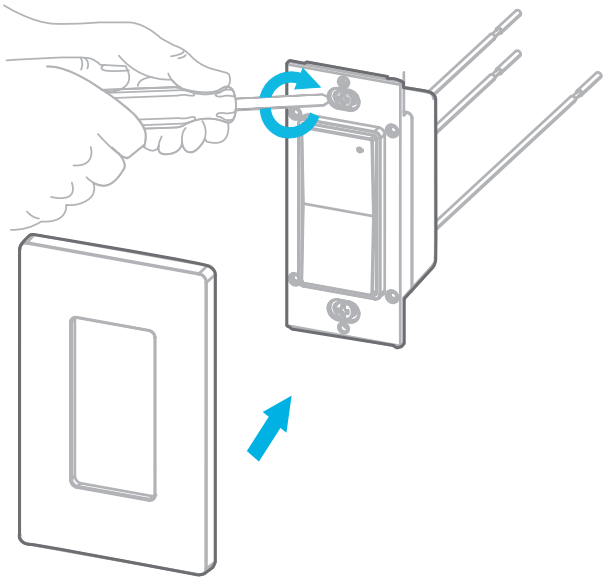

4. Turn power on at the circuit breaker.

Enrolling the device with Auto Learn Enroll

Before you begin: Ensure power is connected to the device.

1. On the IQ panel menu, select **Settings > Advanced Settings > Enter Installer Code > Installation > Devices > Automation > Auto Learn Devices.**
2. Press and hold the On and Off buttons for 2 seconds or until the LED turns orange.
3. Release both buttons and the LED turns off. The device enters enrollment mode, and the panel is notified of the device initiating enrollment.
4. When the device is recognized, tap **OK** when the pop-up window appears. Enter the device details in the next configuration pop-up window.
5. **Optional:** Enter the PIN code on the product label for increased security during enrollment. The device does not pair with the panel if you enter an incorrect PIN code.
6. Tap **Pair**.
7. If the device does not automatically enroll, perform a factory reset as indicated in the Resetting the device section of the user manual.
   Result: The device enrols successfully and returns to the IQ Panel menu.

Enrolling the device with Add PowerG

Before you begin: Ensure power is not connected to the device.

You can enroll the device in the IQ panel using the Add PowerG feature or scan the QR code on the box. To enroll the device in the IQ panel using the Add PowerG feature, complete the following steps:

1. On the IQ panel menu, select **Settings > Advanced Settings > Enter Installer Code > Installation > Devices > Automation > Add PowerG.**

2. Enter the sensor id in the Sensor ID field or scan the QR code on the box label to enroll the device.
3. **Optional:** Enter the PIN code on the product label for increased security during enrollment. The device does not pair with the panel if you enter an incorrect PIN code.
4. Tap **Pair.**
5. Plug in and power on the device.
   Result: The device enrolls successfully.

Considerations when you enroll a device

The following considerations apply when you enroll a device with PowerG or when you enroll a device with Auto Learn enroll.

- If the buttons remain pressed after the light is turned off, the device returns to low-power mode.
- If the connection is successful, the PowerG signal strength displays on the device and the enrolled status on the control panel.
- If the connection fails, a **Not enrolled** status indicates on the control panel.

Checking the PowerG signal strength of the device

1. Ensure that the IQ Power Switch-PG is powered on.
2. On the IQ panel, tap **Settings > Advanced Settings > Enter Installer Code > Installation > System Tests > PowerG Test > Run**.

LED indication and configuration

- LED flashes orange 3 times when delay off is activated.

Table 1: Device configuration state

#	Configuration	Definition
1	Activation LED enabled	LED turns green when the load is on. LED does not turn green when the load is off.
2	Activation LED disabled	LED is always off. ⓘ **Note:** The IQ Dimmer-PG and IQ Power Switch-PG operations that require feedback overrides the Activation LED disabled mode. These operations are the PowerG signal strength test and the Delay Off Timer.

ⓘ **Note:** If the connection fails and the LED indicator turns off, reset the device to factory default. For more information see, Resetting the device.

Manual operation

Table 2: Device operations

Action	Status	Function
Short press the Off button	On	Turns the light Off.
	Off	Keeps the light Off.
Short press the On button	On	Keeps the light On.
	Off	Turns the light On.
Double click the Off button	On	Switches the light Off after a 5 minute delay as hardware default.
Short press the Off button	Delayed Off	Immediately turn Off the load and cancel the delay timer.
Short press the On button	Delayed On	Immediately turn Off the load and cancel the delay timer.

Additional behavior of the device

Behavior	Corresponding behavior
Control the light on or off using the built-in button	The IQ Panel updates the status within 10 seconds.
When enrolled	The IQ Panel registers the device as a PowerG device.
When power is removed from the device	The IQ panel updates the device status to unreachable within 14 minutes.
When power is restored to the device	The IQ panel automatically updates the device status to normal within 5 minutes.
When communication is lost and then restored	The IQ panel automatically updates the device status to normal within 5 minutes.

Resetting the device

1. Press and hold both on and off buttons for at least 2 seconds. The LED turns orange to indicate a long press.
2. Release briefly and press and hold both buttons again for 5 seconds until the LED turns red and flashes 3 times to indicate a back to factory default reset.

   ⓘ **Note:** After a device is reset back to factory default, you must delete it from the panel and re-enroll the device.

Troubleshooting

⚠ **WARNING:** Only a service person should attempt to change electrical wiring.

Lights Flickering

Lamp has a bad connection.

Wires need to be secured firmly under terminal screws of switch.

Light does not turn on and LED indicator does not turn on

Circuit breaker or fuse has tripped.

Check if the lamp is burned out or if the lamp neutral connection is not wired correctly.

Light can be powered on but LED indicator does not turn on

The switch is not configured.

Reset the switch and connect to the panel.

Unable to control the lights remotely.

Check if the switch is connected to the panel and ensure the wiring is correct.

Specifications

Frequency	912-919 MHz
Protocol	PowerG
Maximum noise	24dB at 20cm
Maximum load	Incandescent 600W, CFL/LED 300W
Standby power consumption	<1W
Power supply	120V at 60Hz
Maximum current	5A
Wiring	Direct wire connection, wire gauge 16 AWG
Humidity	0 to 85%, non condensing
Operating temperature range	0°C to 40°C or 32°F to 104°F
Storage temperature range	-20°C to 60°C or -4°F to 140°F
Device dimensions (L x W x H)	116.84 mm (4.6 in.) x 72.9 mm (2.87 in.) x 43.94 mm (1.73 in.)

Device weight	115.7g

Compliance with standards

FCC and ISED Canada Compliance Statement

This device complies with FCC Rules Part 15 and with ISED license-exempt RSS standard(s). Operation is subject to two conditions:

(1) This device may not cause harmful interference, and (2) this device must accept any interference that may be received or that may cause undesired operation.

Le présent appareil est conforme aux CNR d'Industrie Canada applicables aux appareils radio exempts de licence. L'exploitation est autorisée aux deux conditions suivantes:

(1) l'appareil ne doit pas produire de brouillage, et (2) l'utilisateur de l'appareil doit accepter tout brouillage radioélectrique subi, même si le brouillage est susceptible d'en compromettre le fonctionnement.

To comply with FCC Section 1.1310 for human exposure to radio frequency electromagnetic fields and IC requirements, implement the following instruction:

A distance of at least 20cm. between the equipment and all persons should be maintained during the operation of the equipment.

Le dispositif doit être placé à une distance d'au moins 20 cm à partir de toutes les personnes au cours de son fonctionnement normal. Les antennes utilisées pour ce produit ne doivent pas être situés ou exploités conjointement avec une autre antenne ou transmetteur.

Note: This equipment has been tested and found to comply with the limits for a Class B digital device, pursuant to part 15 of the FCC Rules. These limits are designed to provide reasonable protection against harmful interference in a residential installation. This equipment generates, uses and can radiate radio frequency energy and, if not installed and used in accordance with the instructions, may cause harmful interference to radio communications. However, there is no guarantee that interference will not occur in a particular installation. If this equipment does cause harmful interference to radio or television reception, which can be determined by turning the equipment off and on, the user is encouraged to try to correct the interference by one or more of the following measures:

- Reorient or relocate the receiving antenna.
- Increase the separation between the equipment and receiver.
- Connect the equipment into an outlet on a circuit different from that to which the receiver is connected.
- Consult the dealer or an experienced radio/TV technician for help.

This Class B digital apparatus complies with Canadian ICES-003.

Cet appareil numerique de la classe B est conforme a la norme NMB-003 du Canada.

WARNING: Changes or modifications to this equipment not expressly approved by the party responsible for compliance (DSC.) could void the user’s authority to operate the equipment.

UL/ULC notes

The IQ Switch PG has been listed by ETL for home automation applications in accordance with the requirements in the Standards UL 60730-1:2016 Ed.5 for contacts and switches.

Safety Instructions

Read the safety information before you install the equipment.

The device shall be installed and used within an environment that provides the pollution degree max 2 and over voltages category II in non-hazardous locations, indoor only. This product is to be installed or used in accordance with local electrical codes and regulations. The device is to be installed in an indoor dry location. Exposure to weather or corrosive conditions may damage the unit.

W.E.E.E Product recycling declaration

	For information regarding the recycling of this product you must contact the company from which you originally purchased it. If you are discarding this product and not returning it for repair then you must ensure that it is returned as identified by your supplier. This product is not to be thrown away with everyday waste. Directive 2012/19/EU Waste Electrical and Electronic Equipment.

Limited Warranty and EULA

To access Warranty and EULA information, access the following link: https://bit.ly/3PwPksX or scan the following QR code:

Technical support

Intrusion Tech support: +1- 855-476-5797 #2 or 1-800-387-3630

©2023 Johnson Controls. All rights reserved. JOHNSON CONTROLS, TYCO and DSC are trademarks and/or registered trademarks. Unauthorized use is strictly prohibited.