TANNER QUEEN BED
ASSEMBLY INSTRUCTIONS

BOX #1

A. HEADBOARD 1 PC

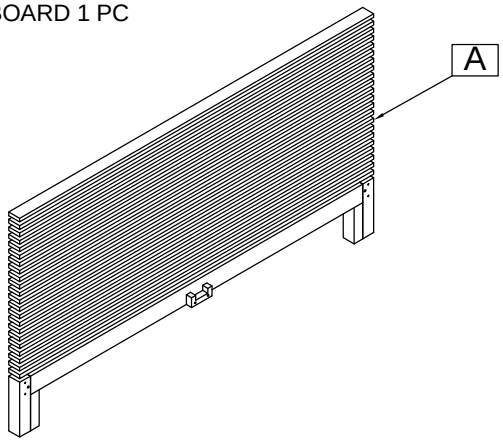

BOX #2

B. FOOTBOARD 1 PC
D. SLAT ROLL 1 SET
BED HARDWARE BOX

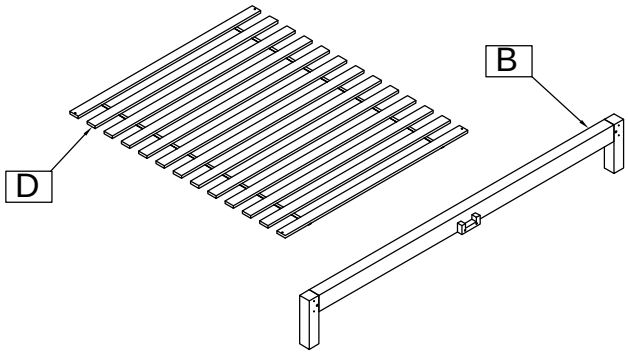

HARDWARE KIT PACKED IN BOX #2

No.	DESCRIPTION	IMAGE	QUANTITY
1	METAL DOWEL (8x40mm)		8 PCS
2	ALL- THREAD BOLT (5/16"x80mm)		4 PCS
3	THREADED HALF MOON WASHER NUT (5/16")		4 PCS
4	SPANNER		1 PC
5	WOOD SCREW (4x30mm)		6 PCS
6	ALLEN KEY		1 PC

BOX #3 :

C. SIDE RAIL 2 PCS
E. CENTER SLAT SUPPORT 1 PC
F. SUPPORT LEG 4 PCS

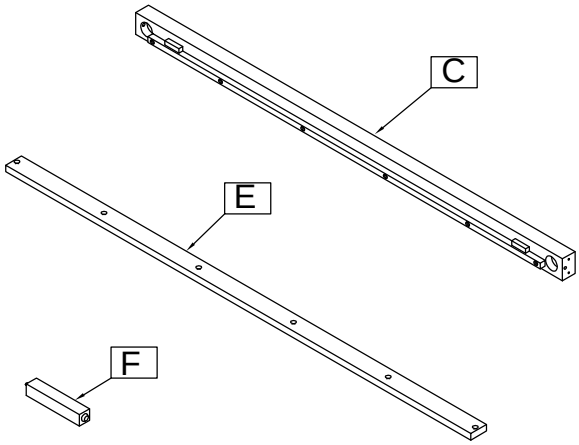

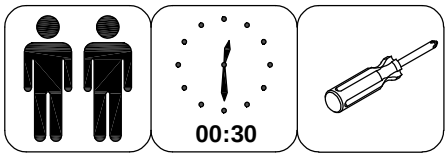

Not provided

ASSEMBLE ON A SOFT SURFACE

FULLY ASSEMBLED

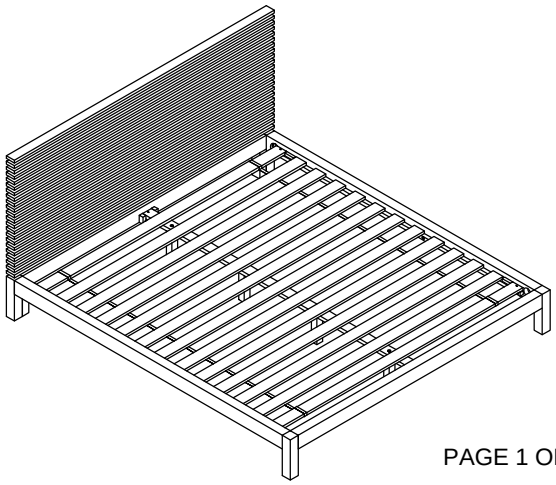

TANNER QUEEN BED
ASSEMBLY INSTRUCTIONS

STEP #1:

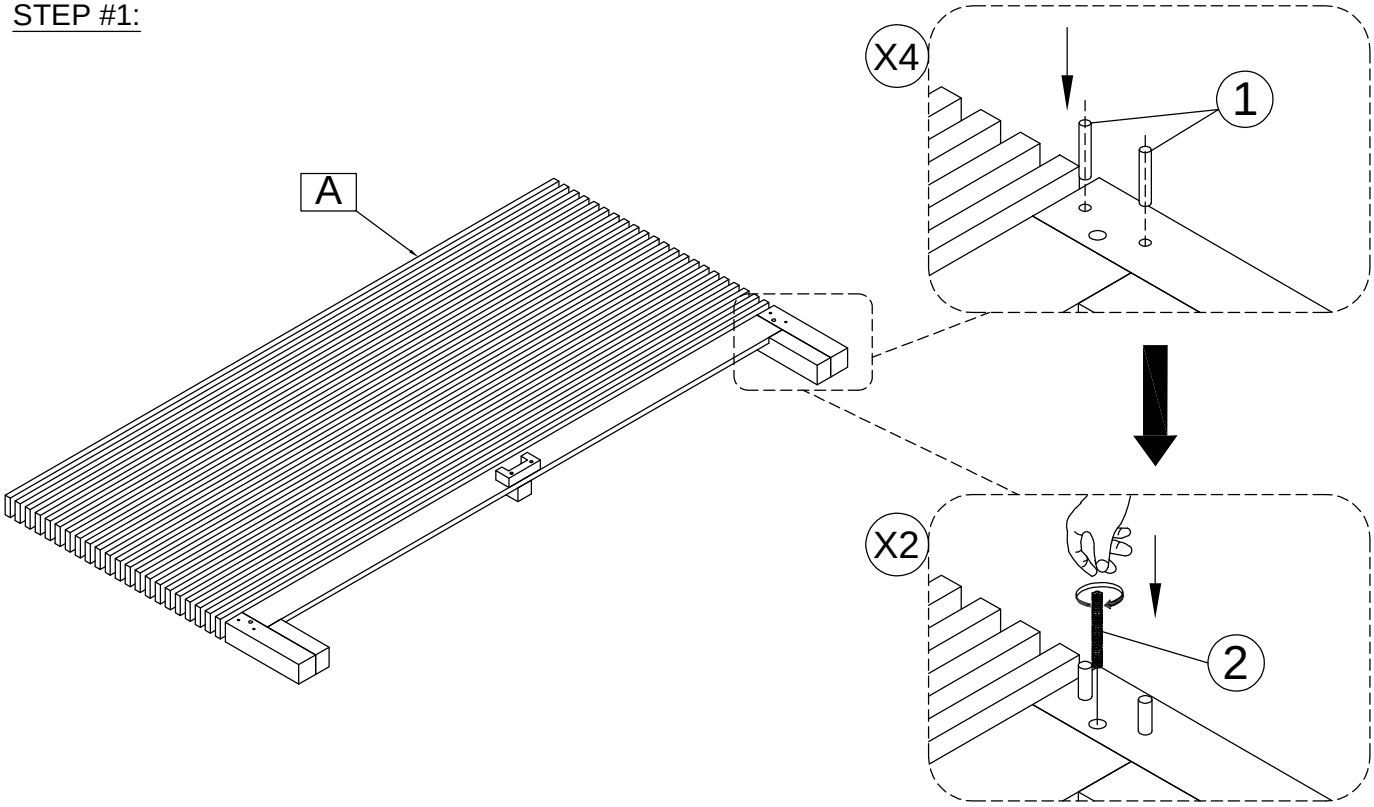

STEP #2:

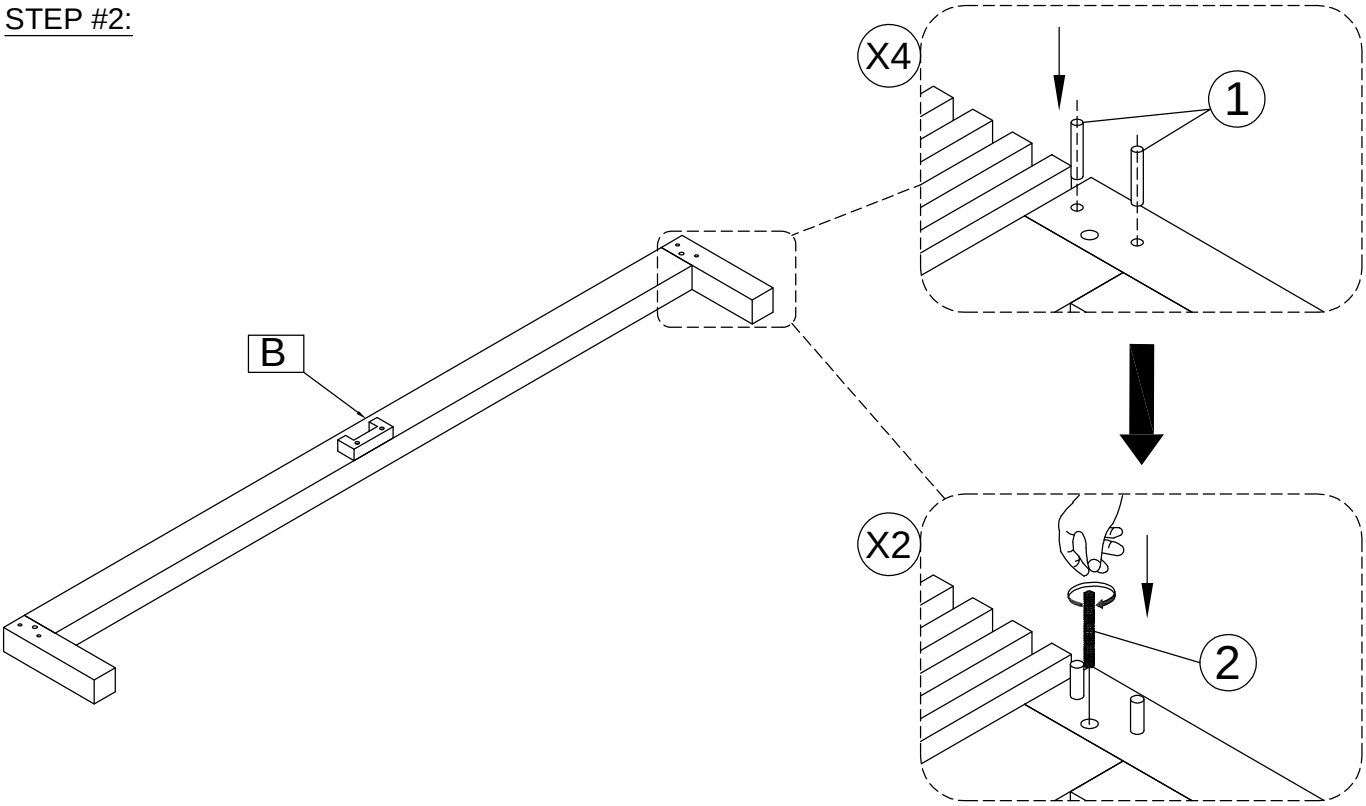

TANNER QUEEN BED
ASSEMBLY INSTRUCTIONS

STEP #3:

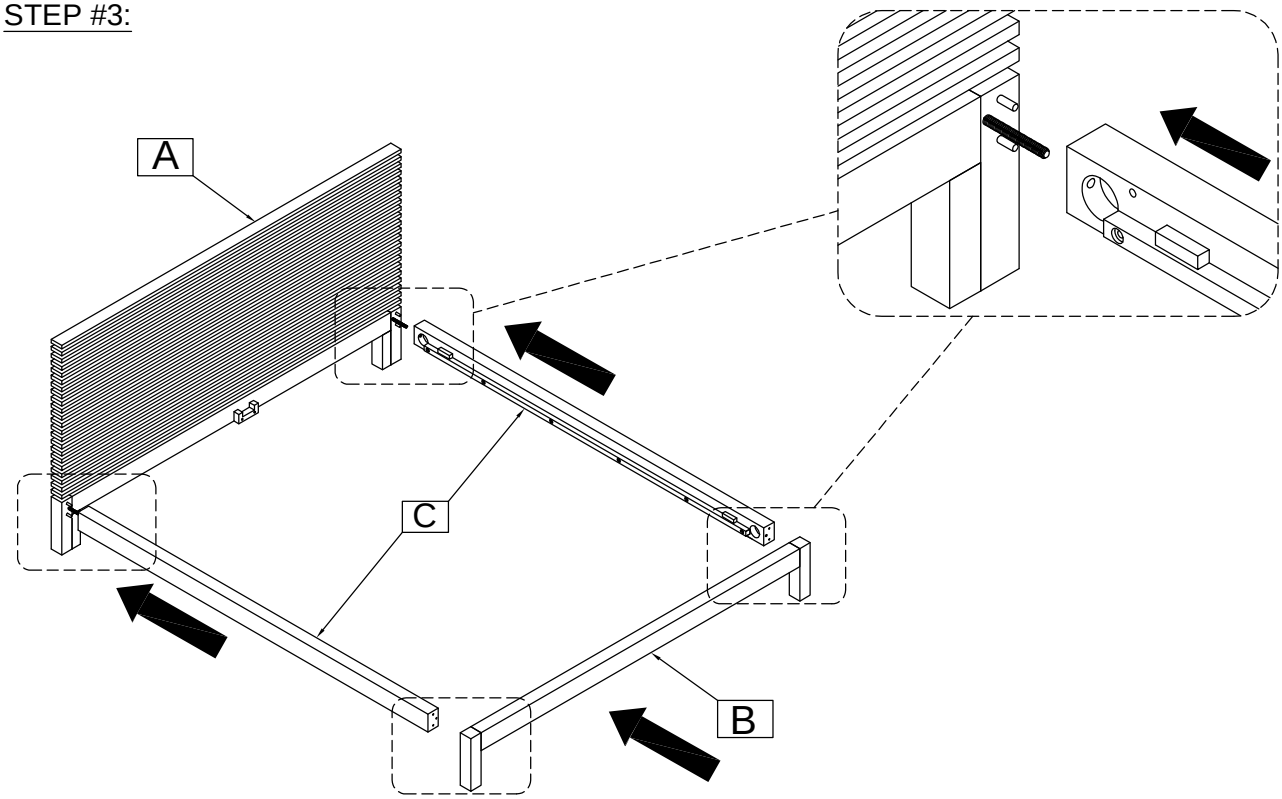

STEP #4:

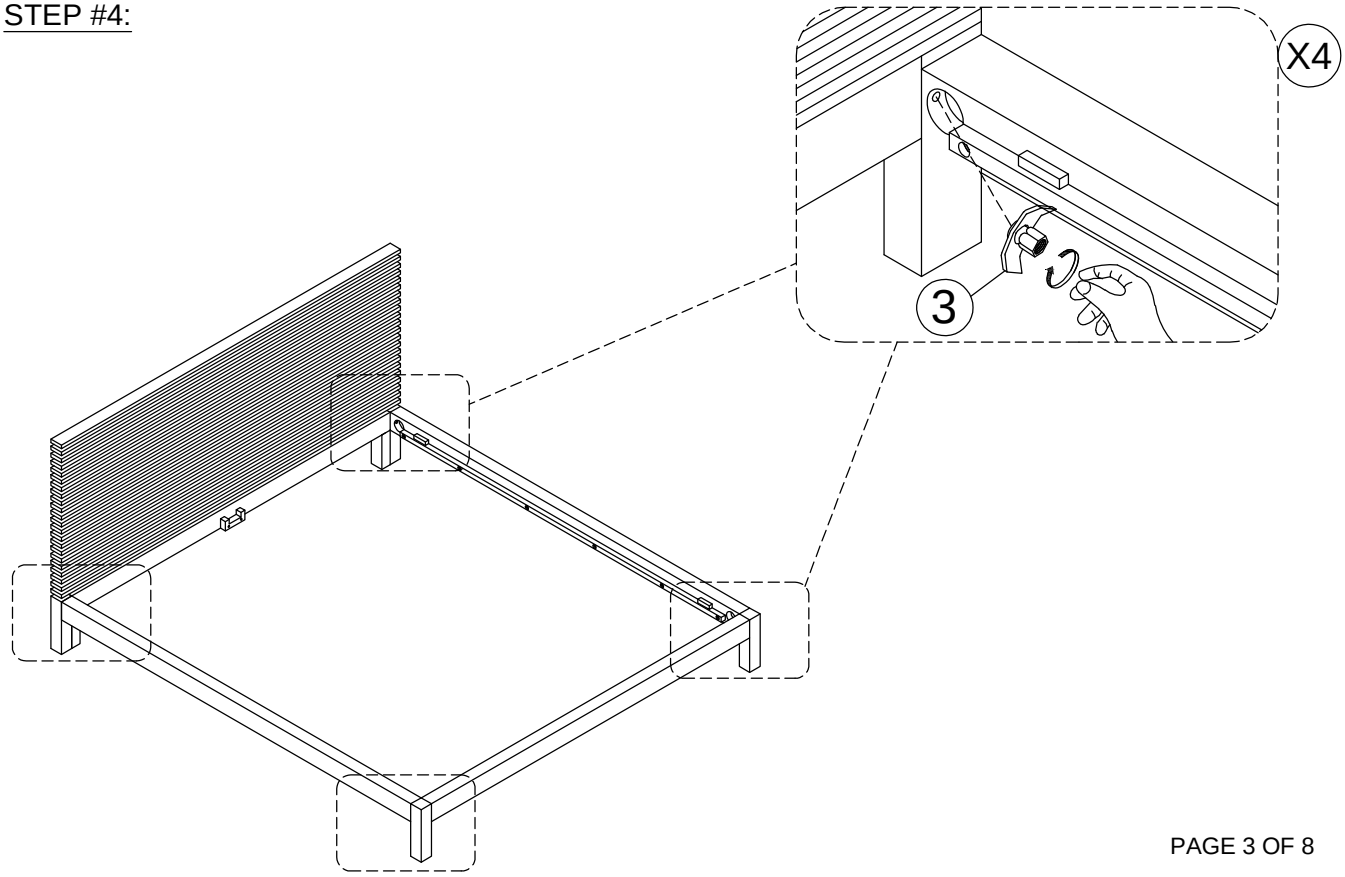

TANNER QUEEN BED
ASSEMBLY INSTRUCTIONS

STEP #5:

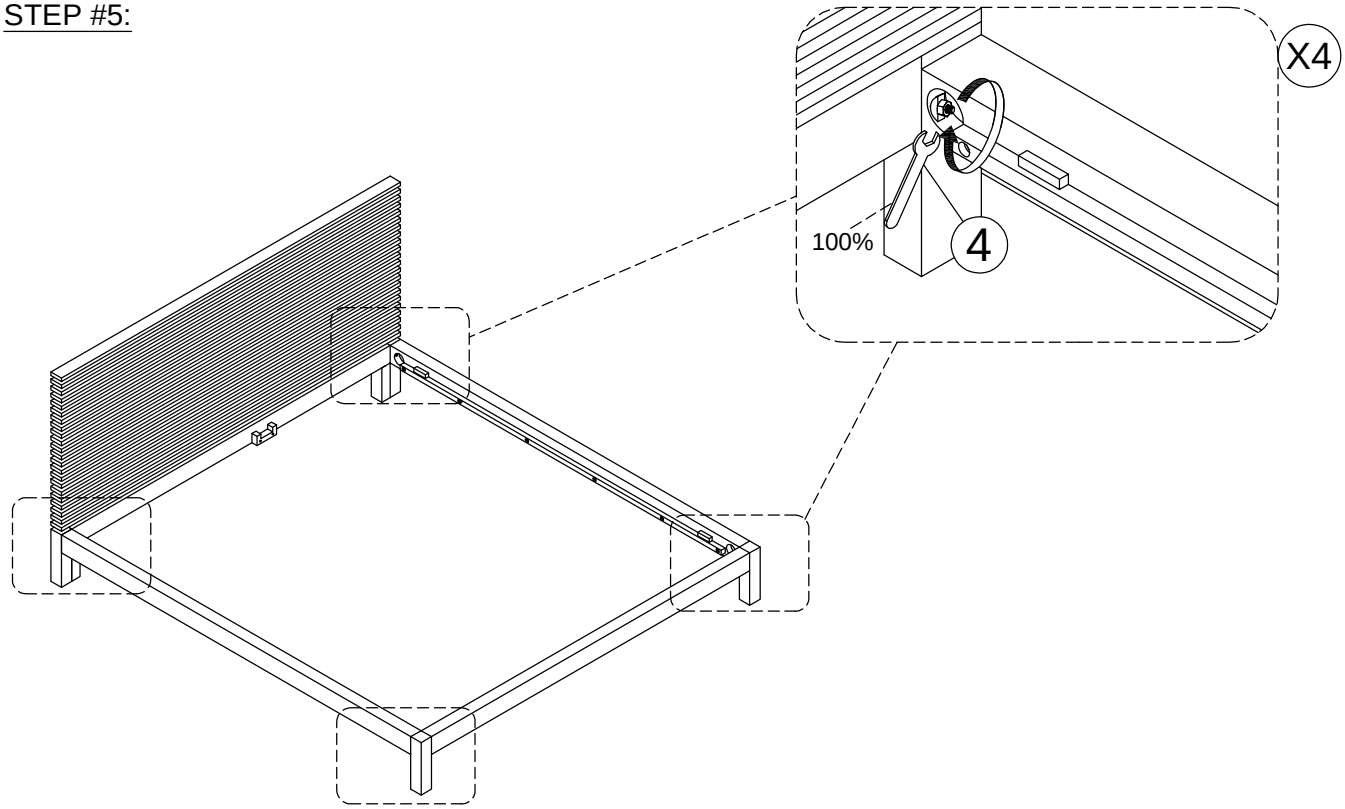

STOP

* IF USING BED FRAME WITH ADJUSTABLE MATTRESS BASE, SKIP TO APPENDIX A: ADJUSTABLE MATTRESS BASE ASSEMBLY SUPPLEMENT.
* IF USING BED FRAME WITH STANDARD BOX SPRING OR FOUNDATION CONTINUE TO STEP 6.

STEP #6:

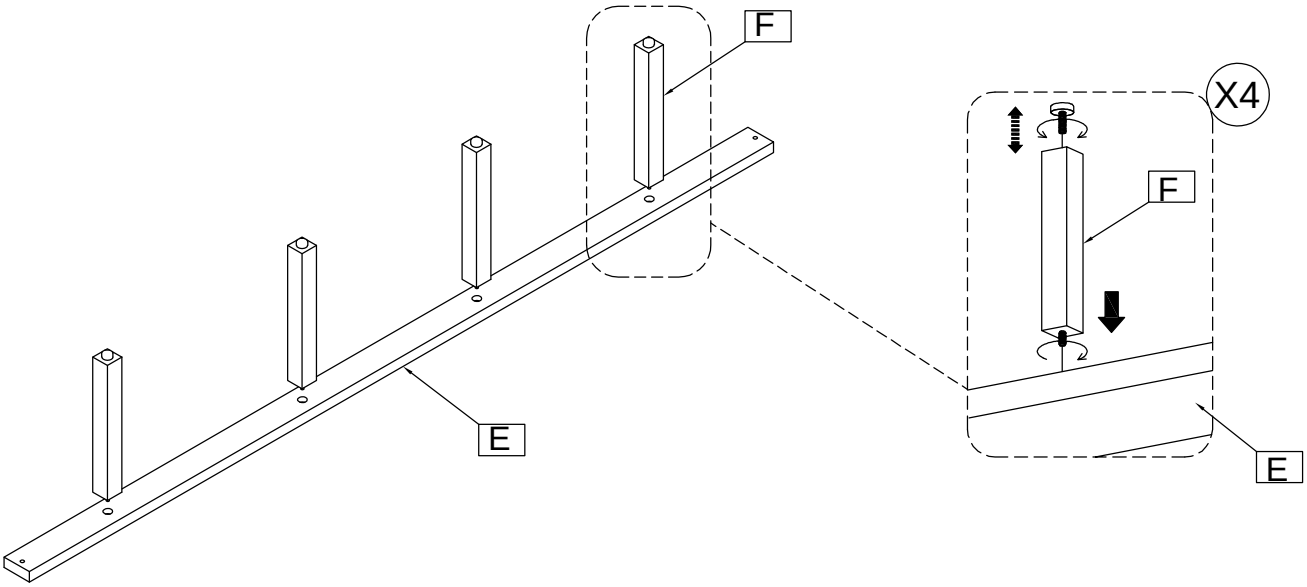

TANNER QUEEN BED
ASSEMBLY INSTRUCTIONS

STEP #7:

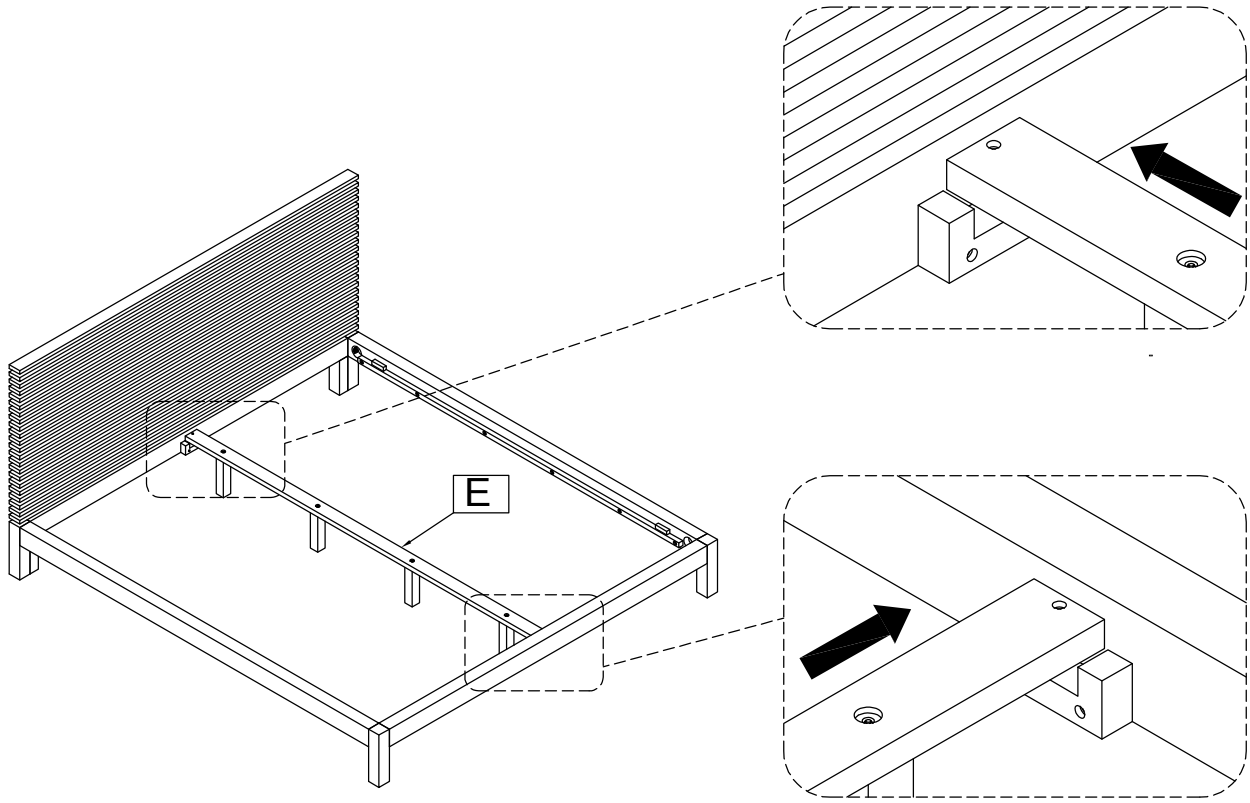

TANNER QUEEN BED
ASSEMBLY INSTRUCTIONS

STEP #8:

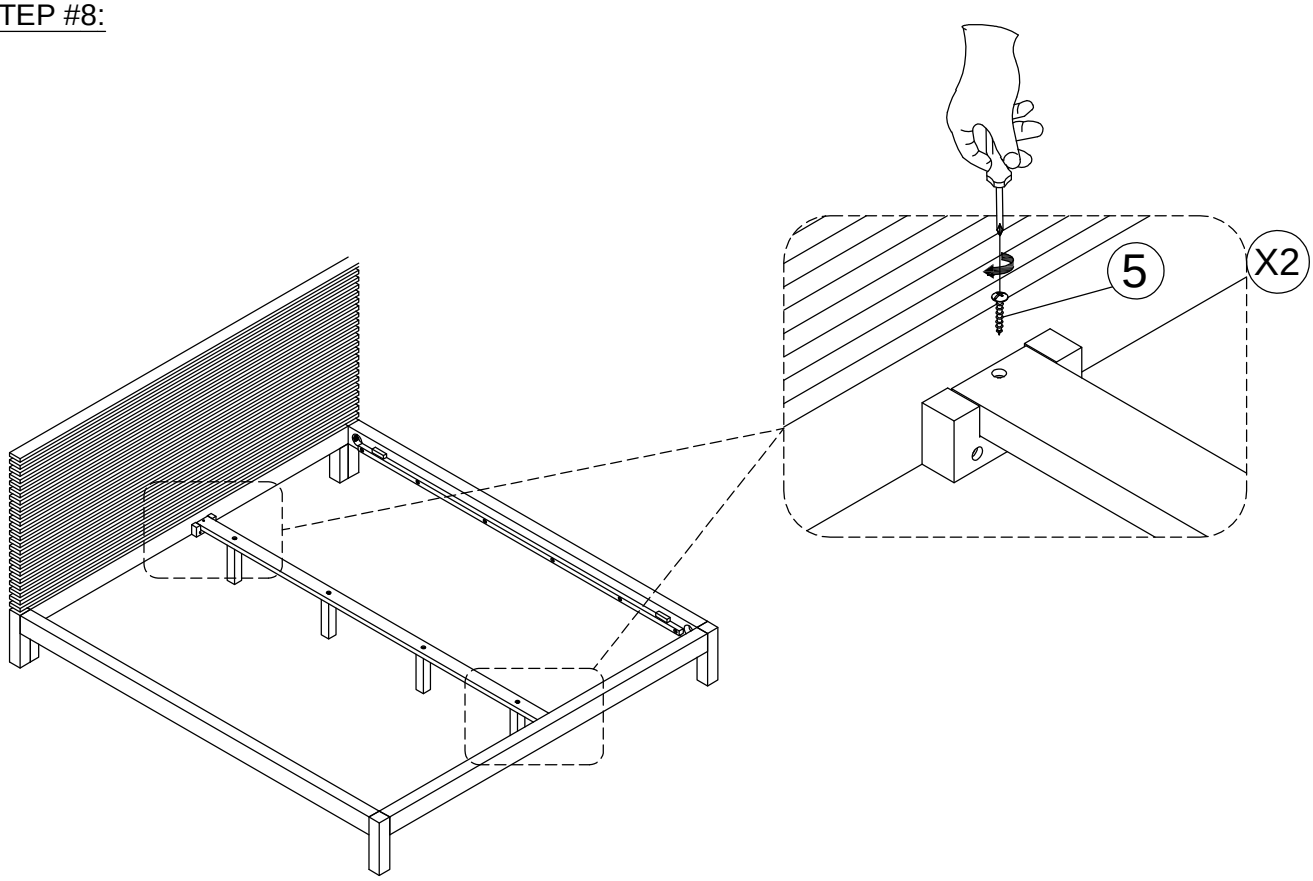

STEP #9:

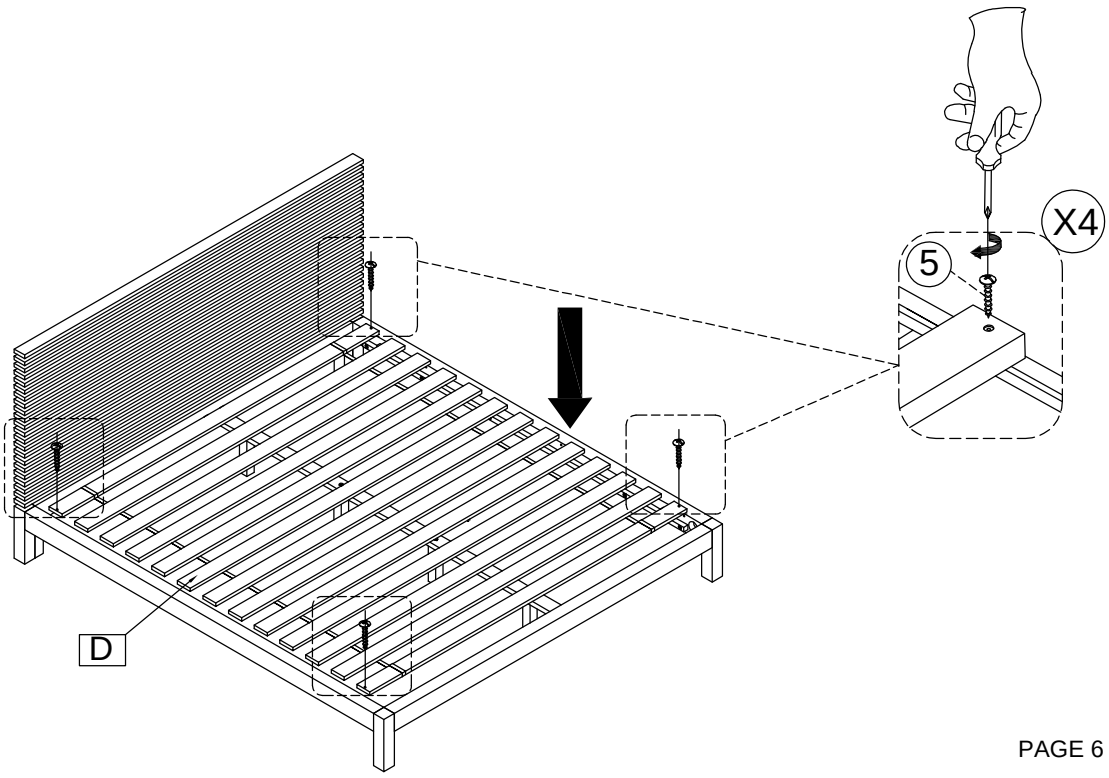

TANNER QUEEN BED
ASSEMBLY INSTRUCTIONS

STEP #10:

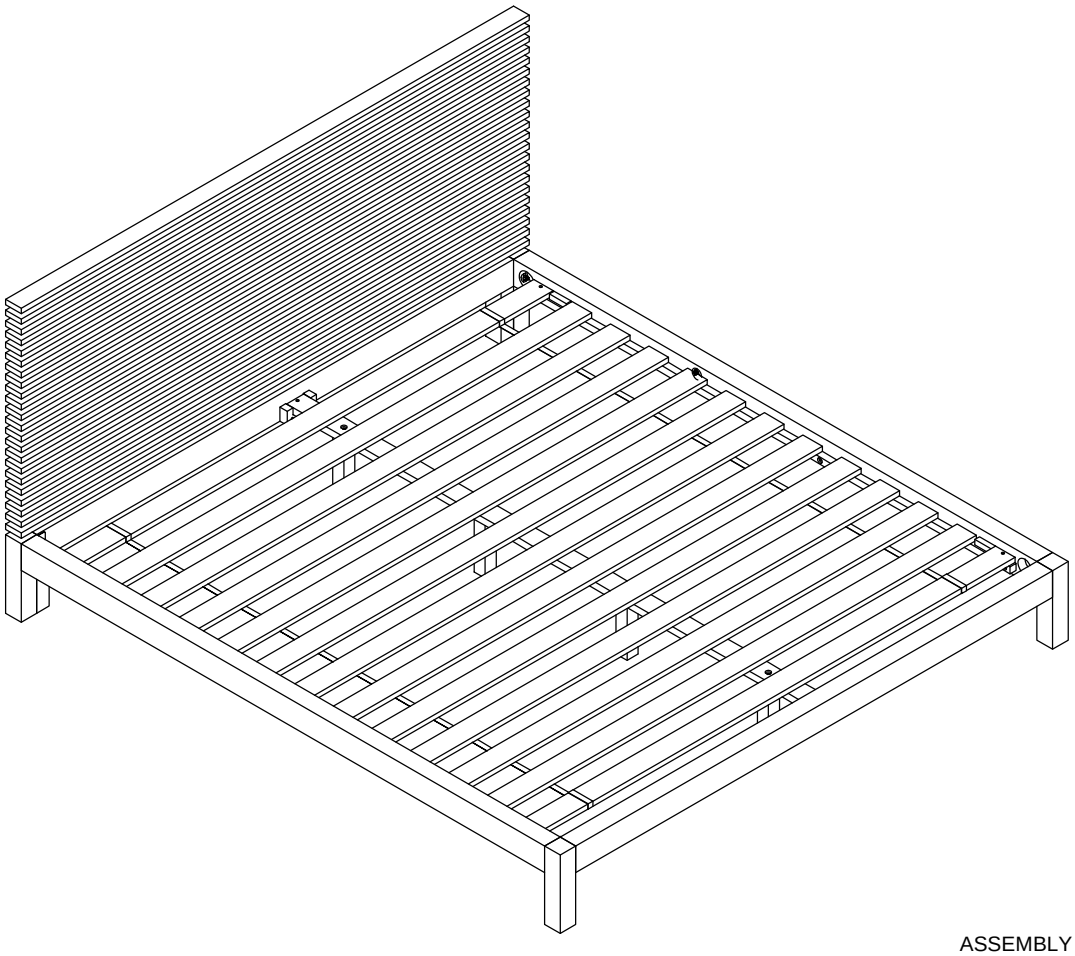

ASSEMBLY COMPLETE

INSTRUCTIONS FOR ADJUSTING LEVELER:

- POSITION THE BED IN YOUR SPACE AND LOCATE THE LEVELER UNDER EACH SUPPORT LEG.
- TURN THE LEVELER COUNTER- CLOCKWISE TO EXTEND THE LEVELER AND CLOCKWISE TO RETRACT IT.
- ADJUST EACH LEVELER UNTIL EACH SUPPORT LEG IS APPLYING EQUAL, UPWARD PRESSURE ON THE BED SUPPORT SLAT.

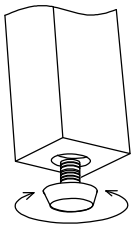

MAINTENANCE INSTRUCTIONS:

- PERIODICALLY CHECK ALL FITTINGS AND TIGHTEN IF NECESSARY, AS THEY CAN LOOSEN OVER TIME.
- ALWAYS REMOVE BOX SPRING AND MATTRESS BEFORE MOVING THE BED.
- LIFT THE BED WHEN MOVING IT. DRAGGING THE BED CAN DAMAGE THE CENTER SUPPORT.
- READJUST LEVELERS AFTER MOVING THE BED.

TANNER QUEEN BED
ASSEMBLY INSTRUCTIONS

APPENDIX A: ADJUSTABLE MATTRESS BASE ASSEMBLY SUPPLEMENT

AN ADJUSTABLE MATTRESS BASE IS A FREESTANDING MATTRESS SUPPORT THAT SITS WITHIN THE PERIMETER OF THE BED FRAME.

IF USING THIS BED FRAME WITH A STANDARD BOX SPRING OR FOUNDATION THESE INSTRUCTIONS DO NOT APPLY.

PRE-ASSEMBLED SIDE RAIL CLEATS OBSTRUCT ADJUSTABLE BASE INSTALLATION AND OPERATION.

FOLLOW THESE INSTRUCTIONS TO REMOVE THEM.

THE FOLLOWING PARTS ARE NOT REQUIRED FOR ADJUSTABLE MATTRESS BASE INSTALLATION:

D. SLAT ROLL 1 SET

E. CENTER SLAT SUPPORT 1 PC

F. SUPPORT LEG 4 PCS

5. WOOD SCREW (4x30MM) 6 PCS

STEP 1:

USE ALLEN KEY (6) IN BOX #2 TO UNSCREW ALLEN BOLTS AND REMOVE PRE-ASSEMBLED SIDE RAIL CLEATS.

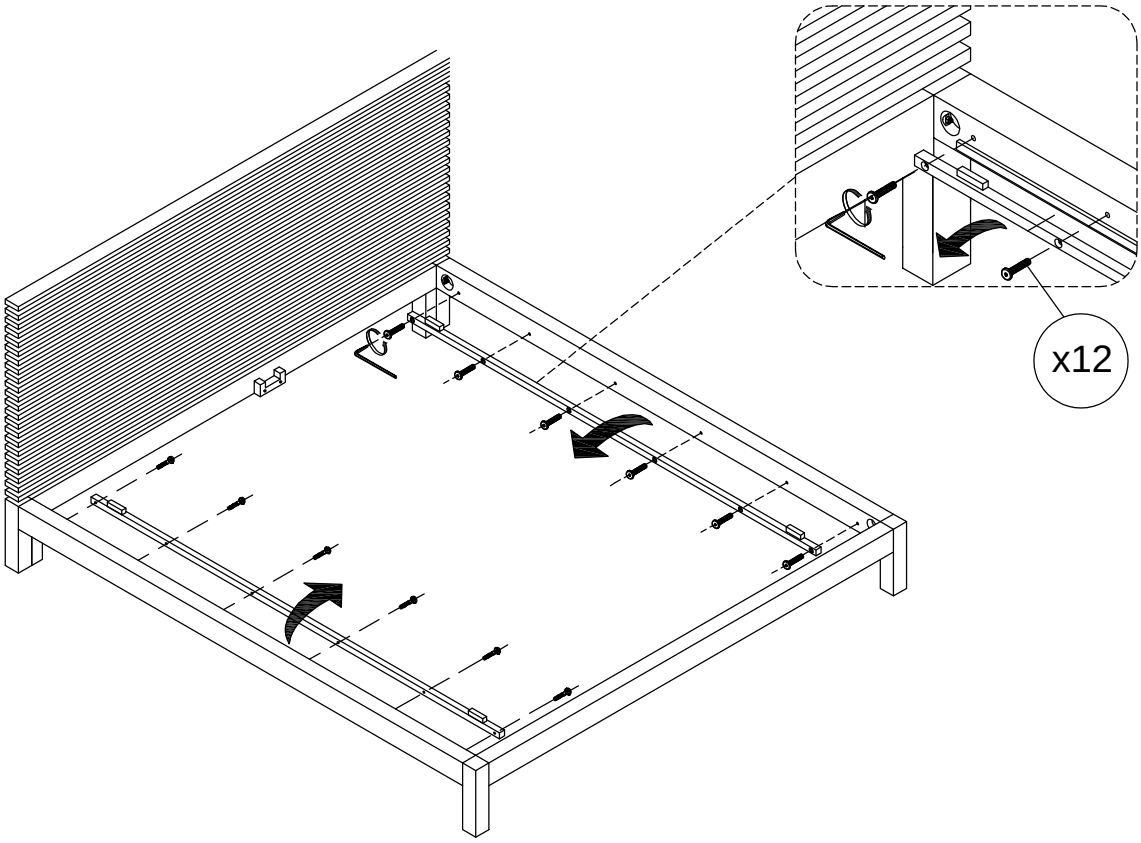

NOTE: YOU MAY WISH TO RETAIN UNUSED PARTS IF IN THE FUTURE YOU INTEND TO USE THE BED FRAME WITH A STANDARD BOX SPRING OR FOUNDATION

TANNER SPREAD PANEL WINGS W/LEFT & RIGHT DRAWERS
ASSEMBLY INSTRUCTIONS

A. LEFT SPREAD PANEL WING W/DRAWER 1 PC
B. RIGHT SPREAD PANEL WING W/DRAWER 1 PC

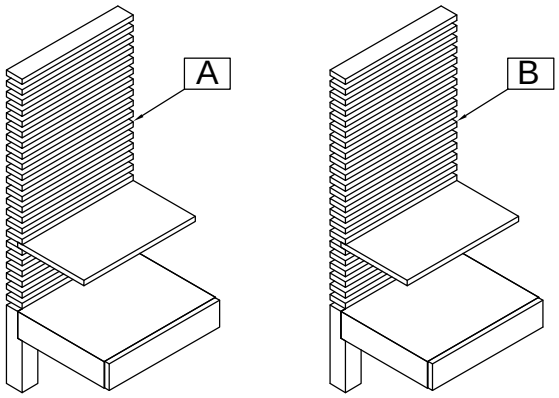

HARDWARE KIT PACKED IN BOX

No.	DESCRIPTION	IMAGE	QUANTITY
1	METAL BRACKET (3x17x60mm)		8 PCS
2	METAL BRACKET (3x60x100mm)		2 PCS
3	ALLEN BOLT (1/4"x20mm)		24 PCS
4	LOCK WASHER (1/4"x2mm)		24 PCS
5	FLAT WASHER (6x19mm)		24 PCS
6	ALLEN KEY		1 PC

FULLY ASSEMBLED

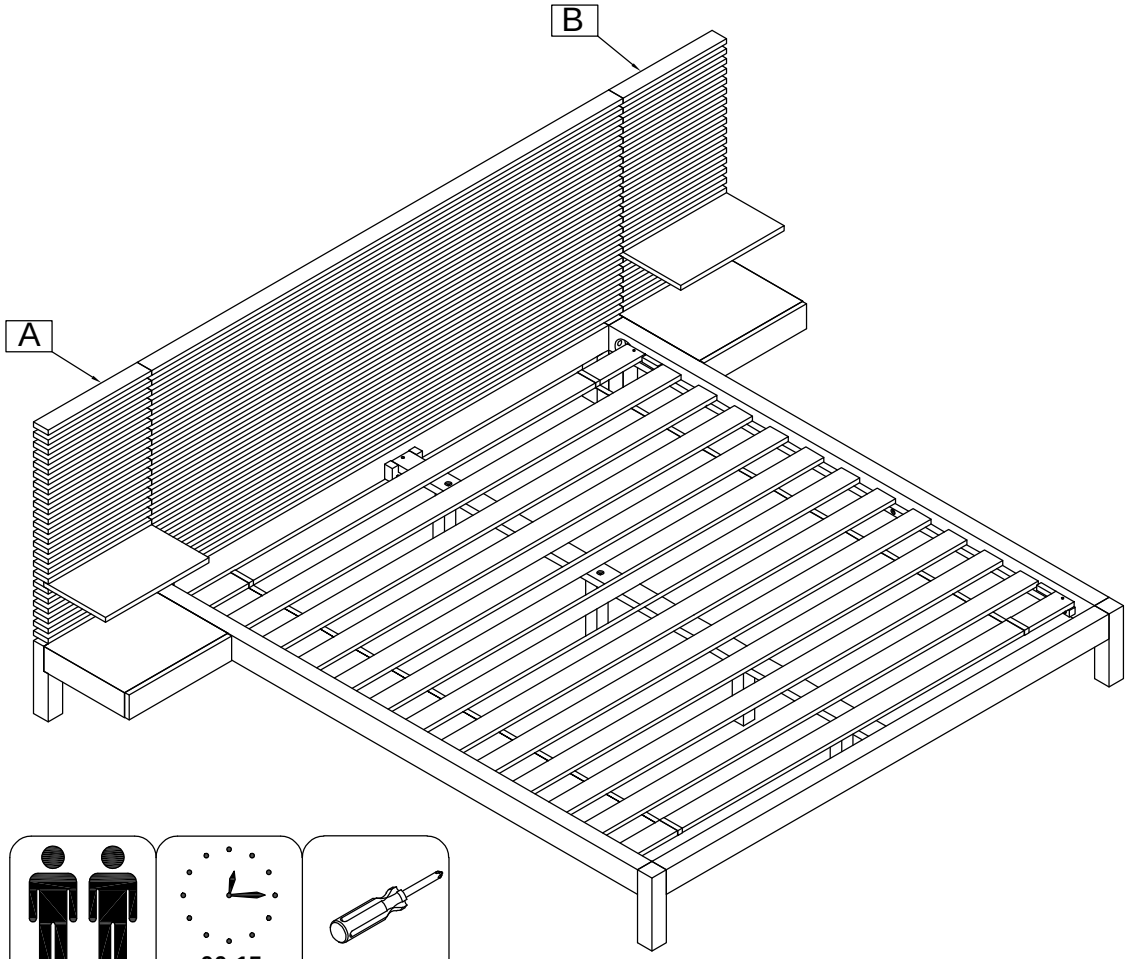

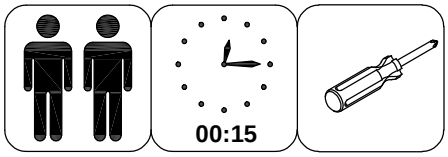

Not provided

ASSEMBLE ON A SOFT SURFACE

TANNER SPREAD PANEL WINGS W/LEFT & RIGHT DRAWERS
ASSEMBLY INSTRUCTIONS

MODUS FURNITURE

STEP #1:

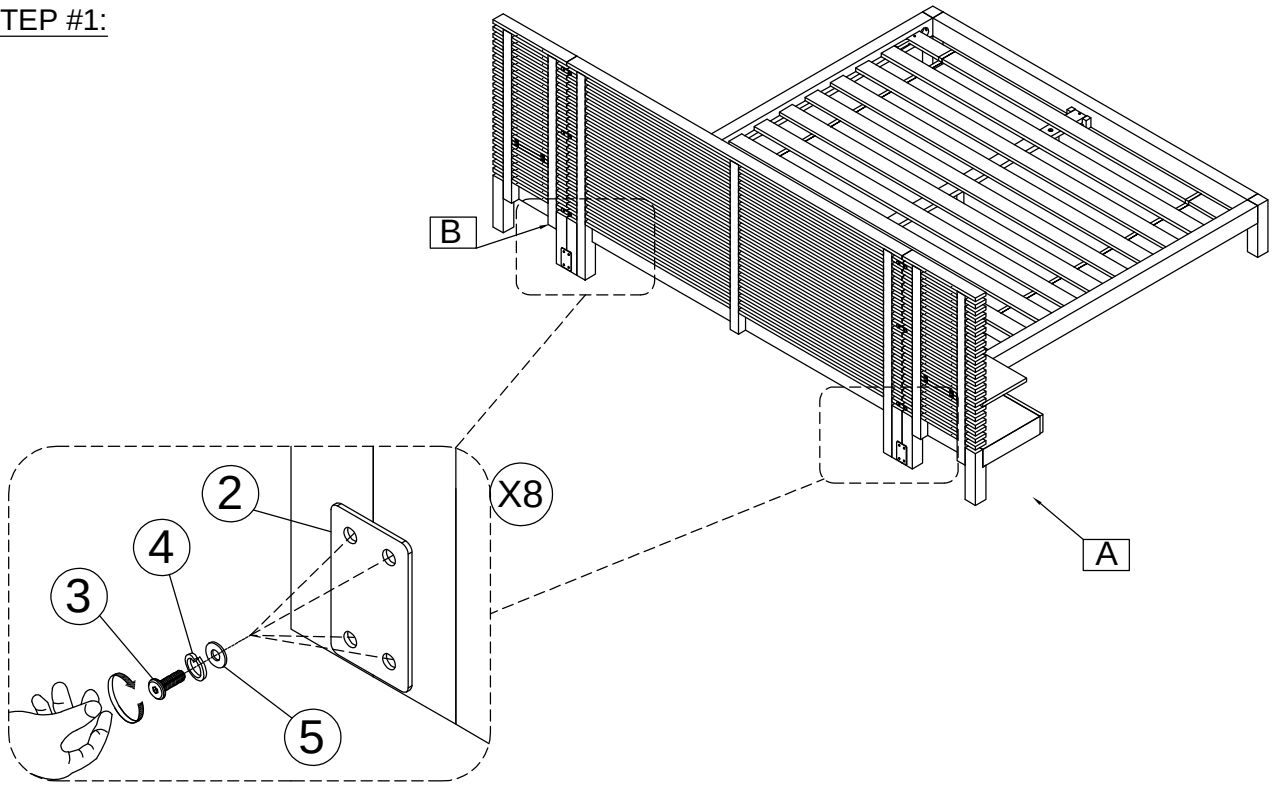

STEP #2:

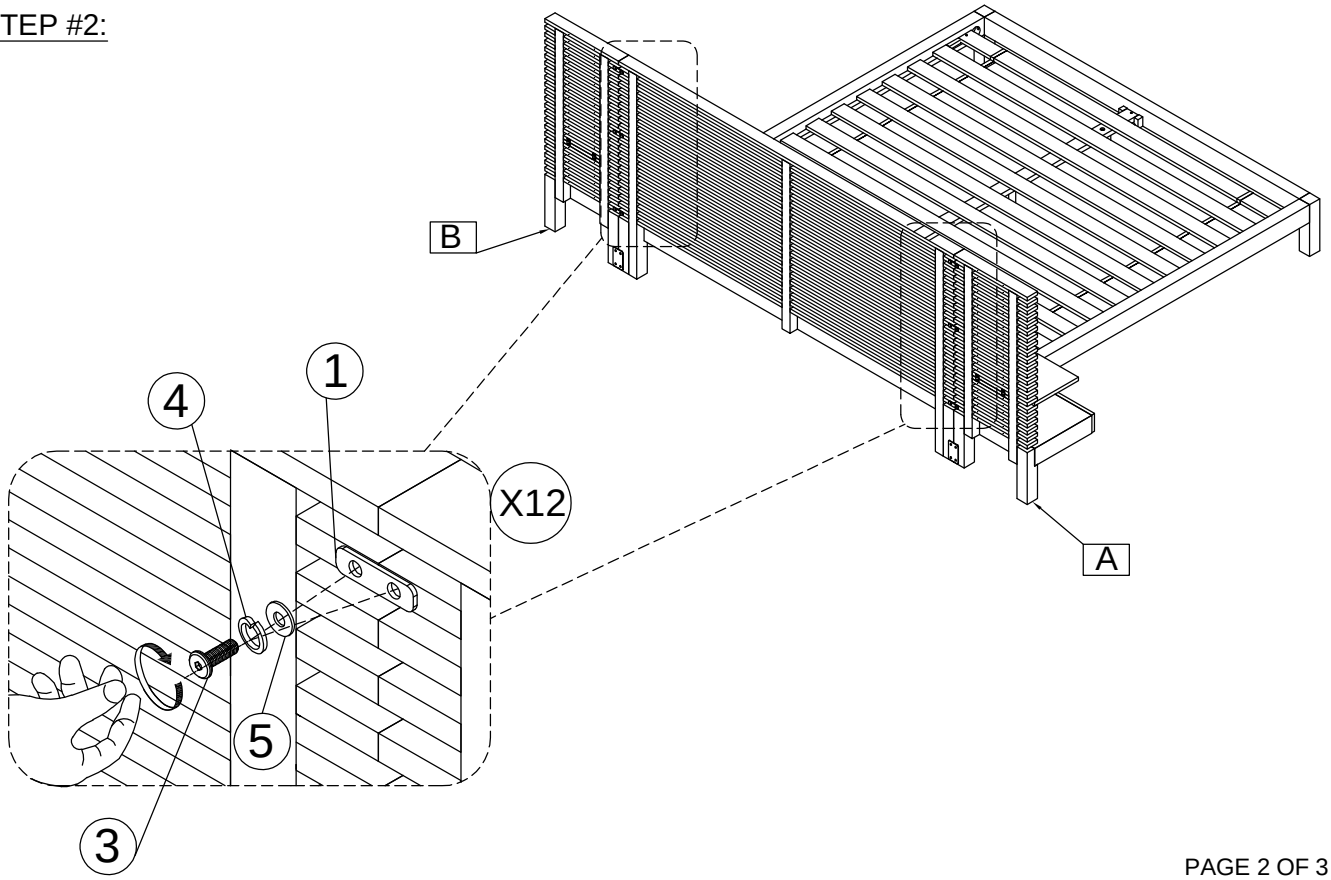

TANNER SPREAD PANEL WINGS W/LEFT & RIGHT DRAWERS
ASSEMBLY INSTRUCTIONS

MODUS FURNITURE

STEP #3:

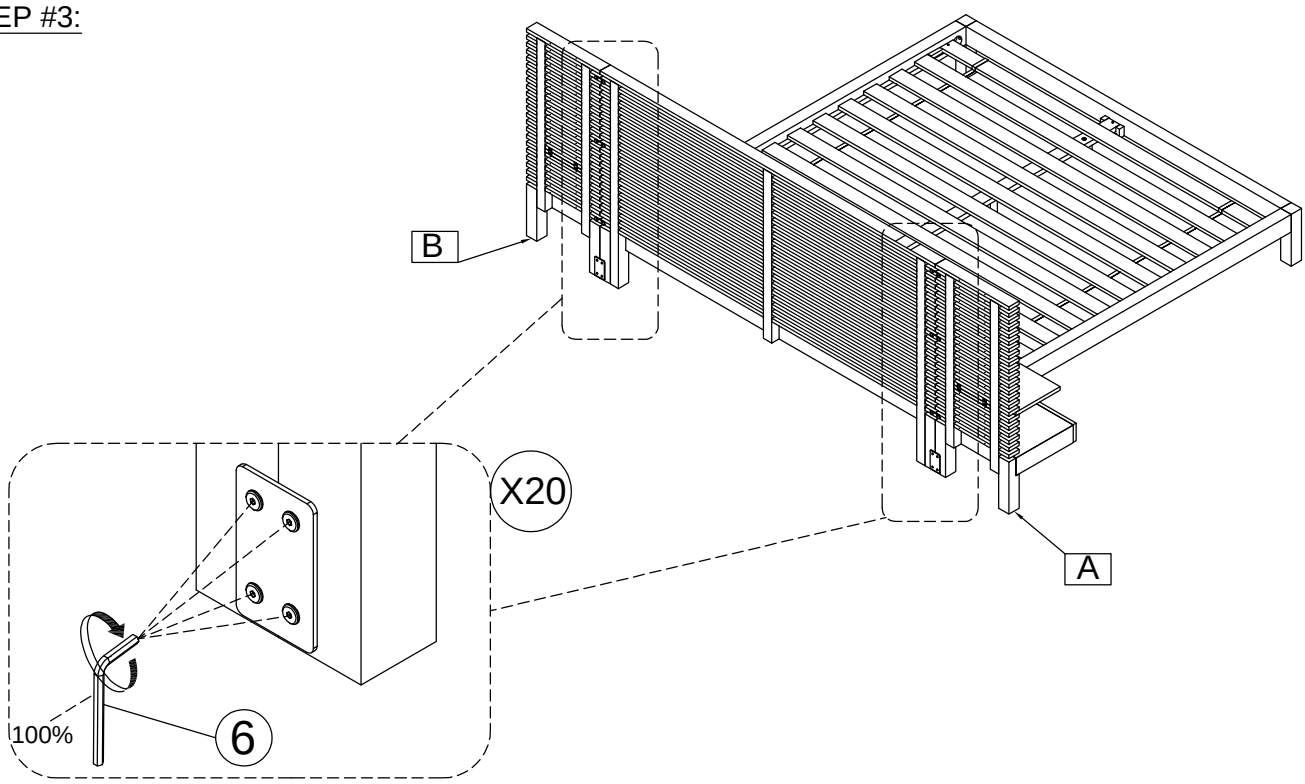

STEP #4:

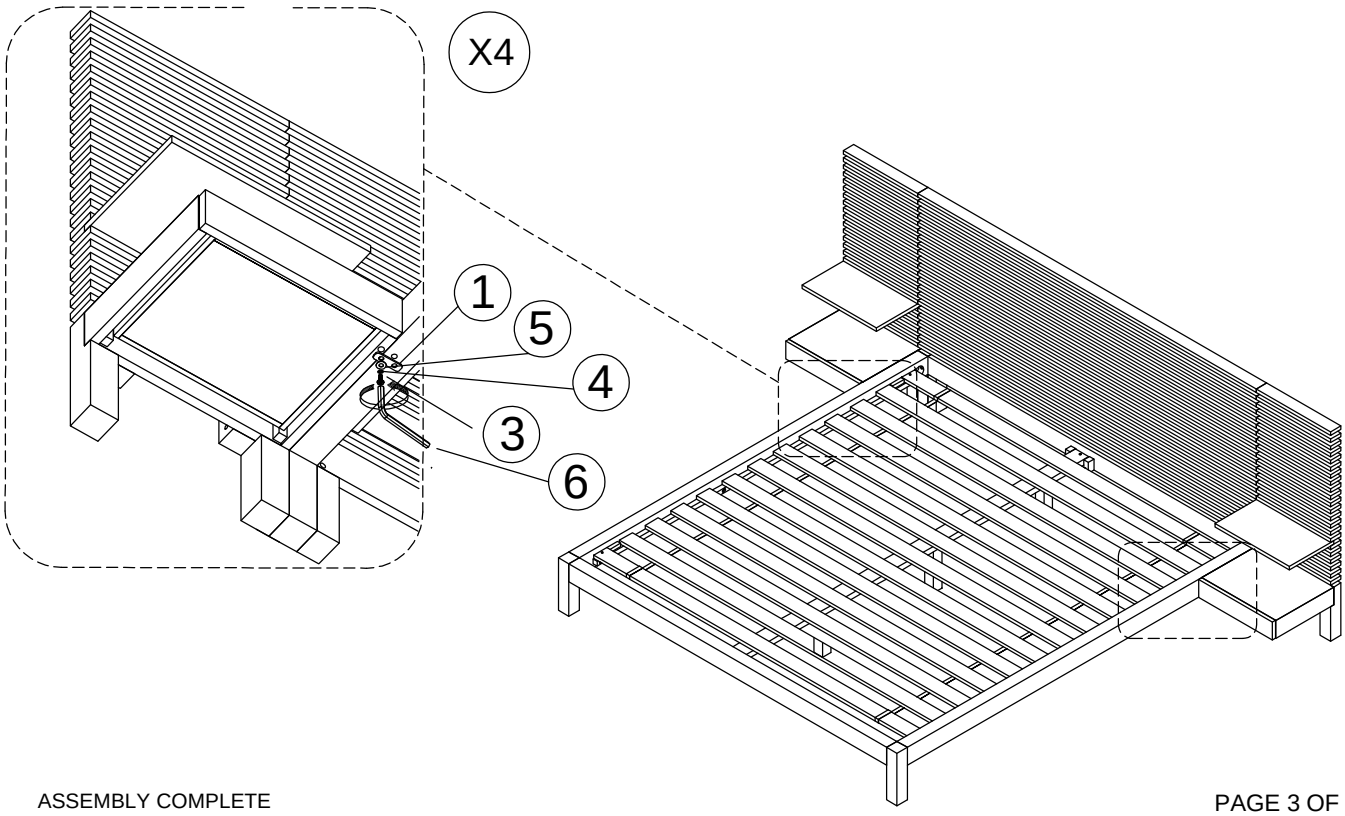

ASSEMBLY COMPLETE

TANNER KING BED
ASSEMBLY INSTRUCTIONS

BOX #1

A. HEADBOARD 1 PC

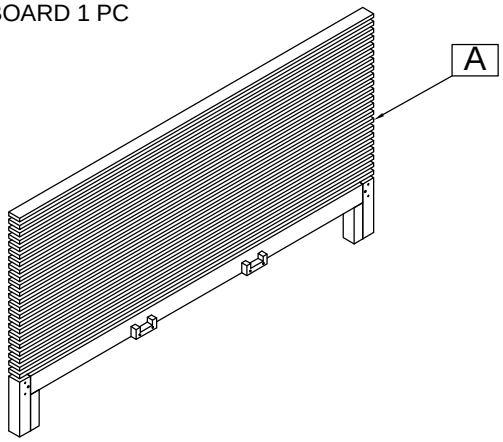

BOX #2

B. FOOTBOARD 1 PC
D. SLAT ROLL 1 SET
BED HARDWARE BOX

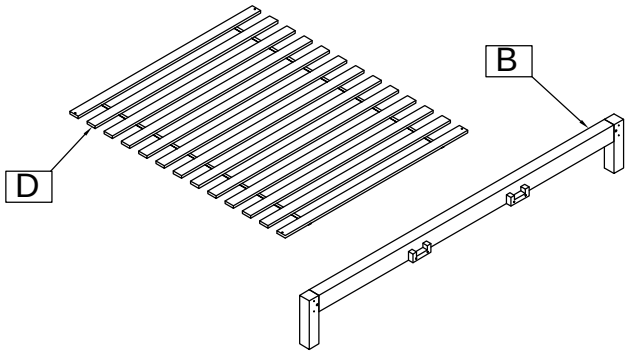

HARDWARE KIT PACKED IN BOX #2

No.	DESCRIPTION	IMAGE	QUANTITY
1	METAL DOWEL (8x40mm)		8 PCS
2	ALL- THREAD BOLT (5/16"x80mm)		4 PCS
3	THREADED HALF MOON WASHER NUT (5/16")		4 PCS
4	SPANNER		1 PC
5	WOOD SCREW (4x30mm)		8 PCS
6	ALLEN KEY		1 PC

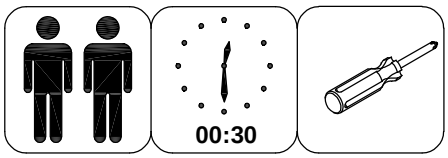

Not provided

ASSEMBLE ON A SOFT SURFACE

BOX #3 :

C. SIDE RAIL 2 PCS
E. CENTER SLAT SUPPORT 2 PCS
F. SUPPORT LEG 8 PCS

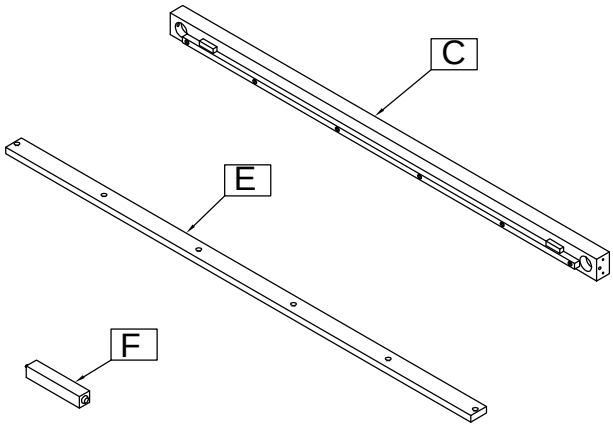

FULLY ASSEMBLED

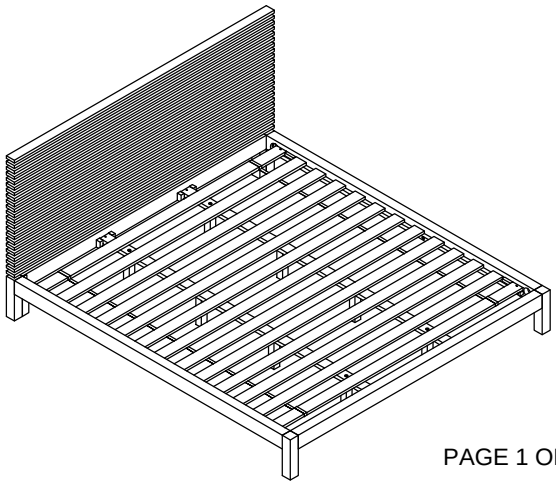

TANNER KING BED
ASSEMBLY INSTRUCTIONS

STEP #1:

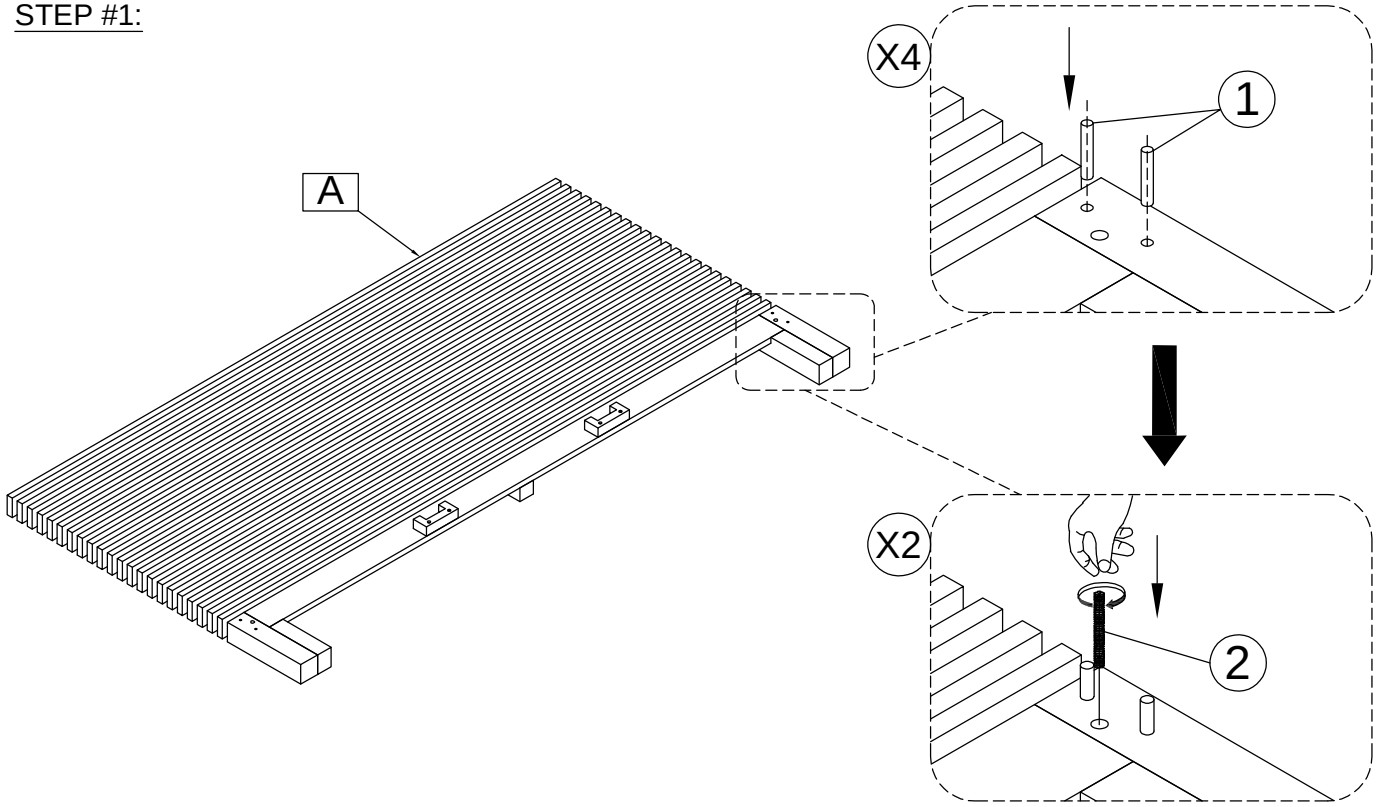

STEP #2:

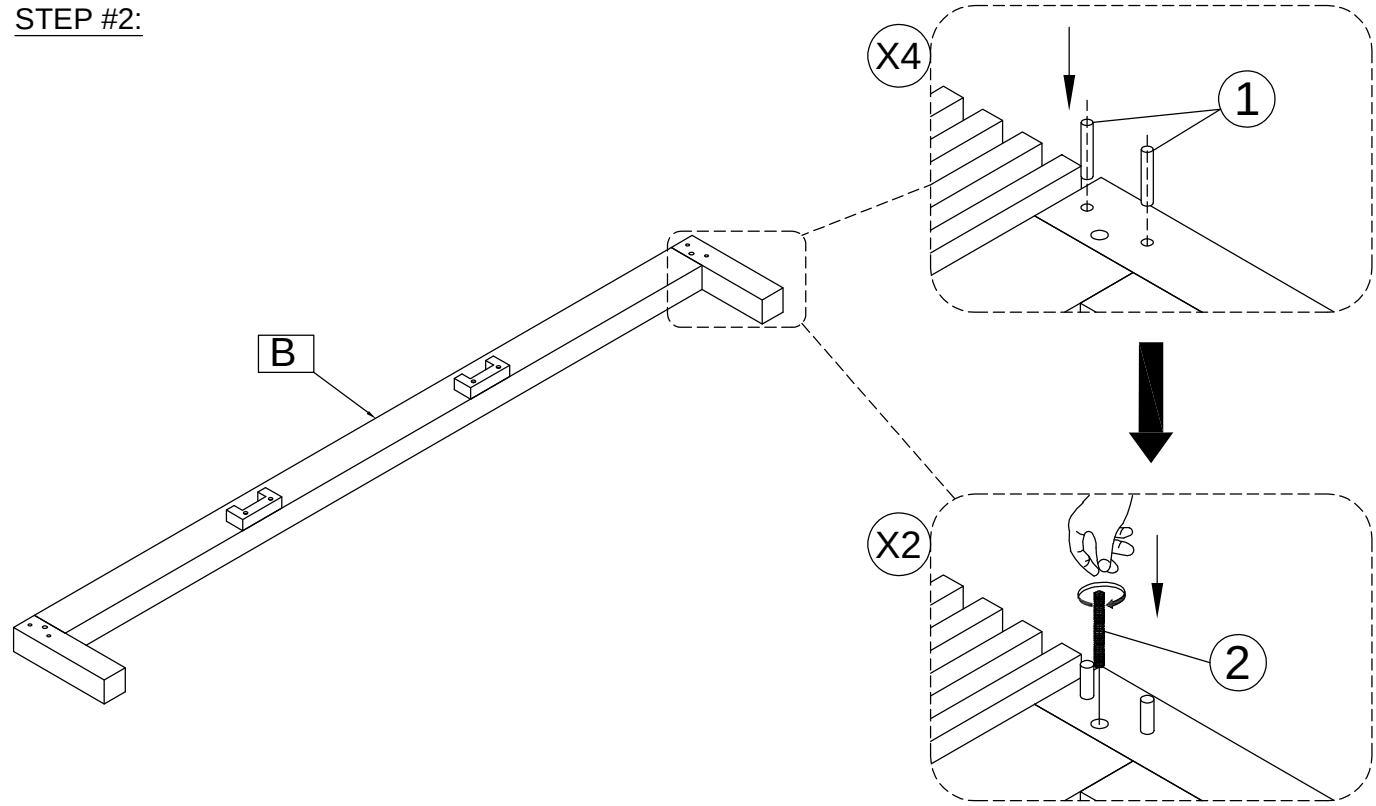

TANNER KING BED
ASSEMBLY INSTRUCTIONS

STEP #3:

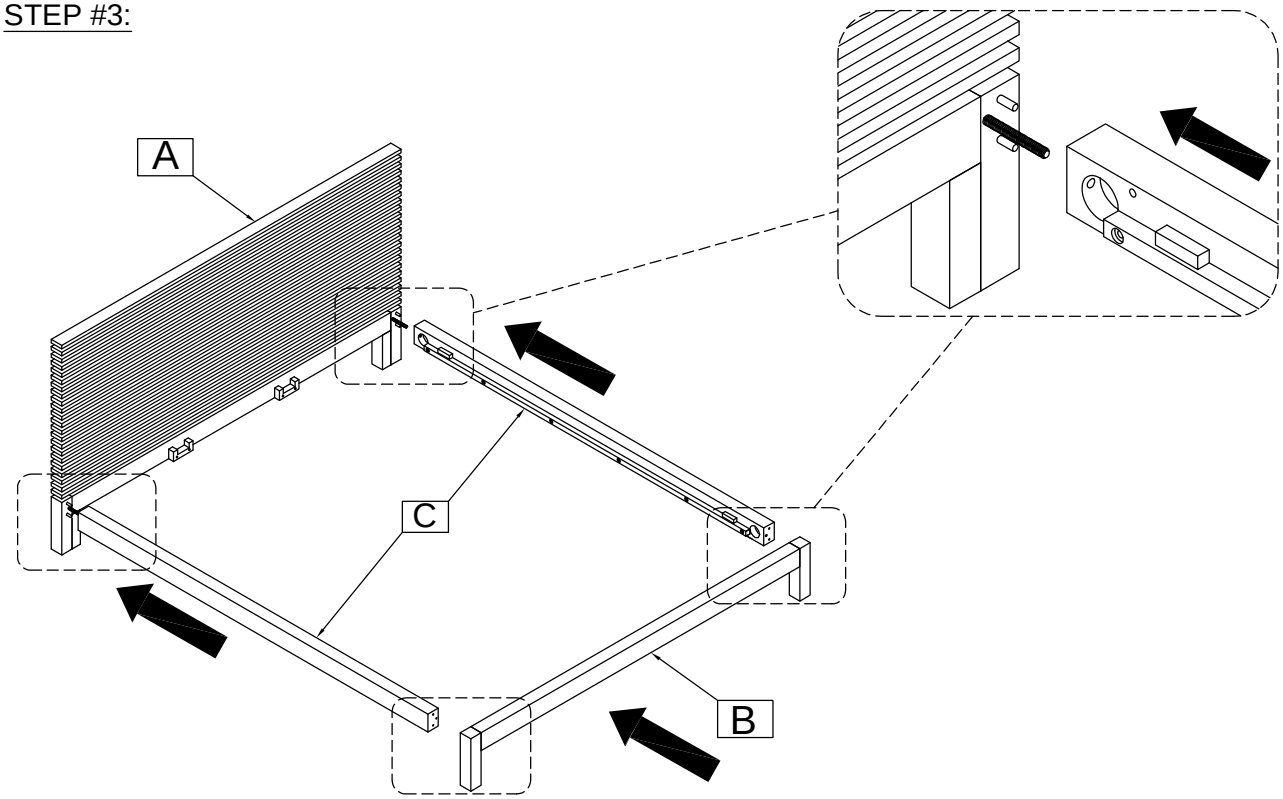

STEP #4:

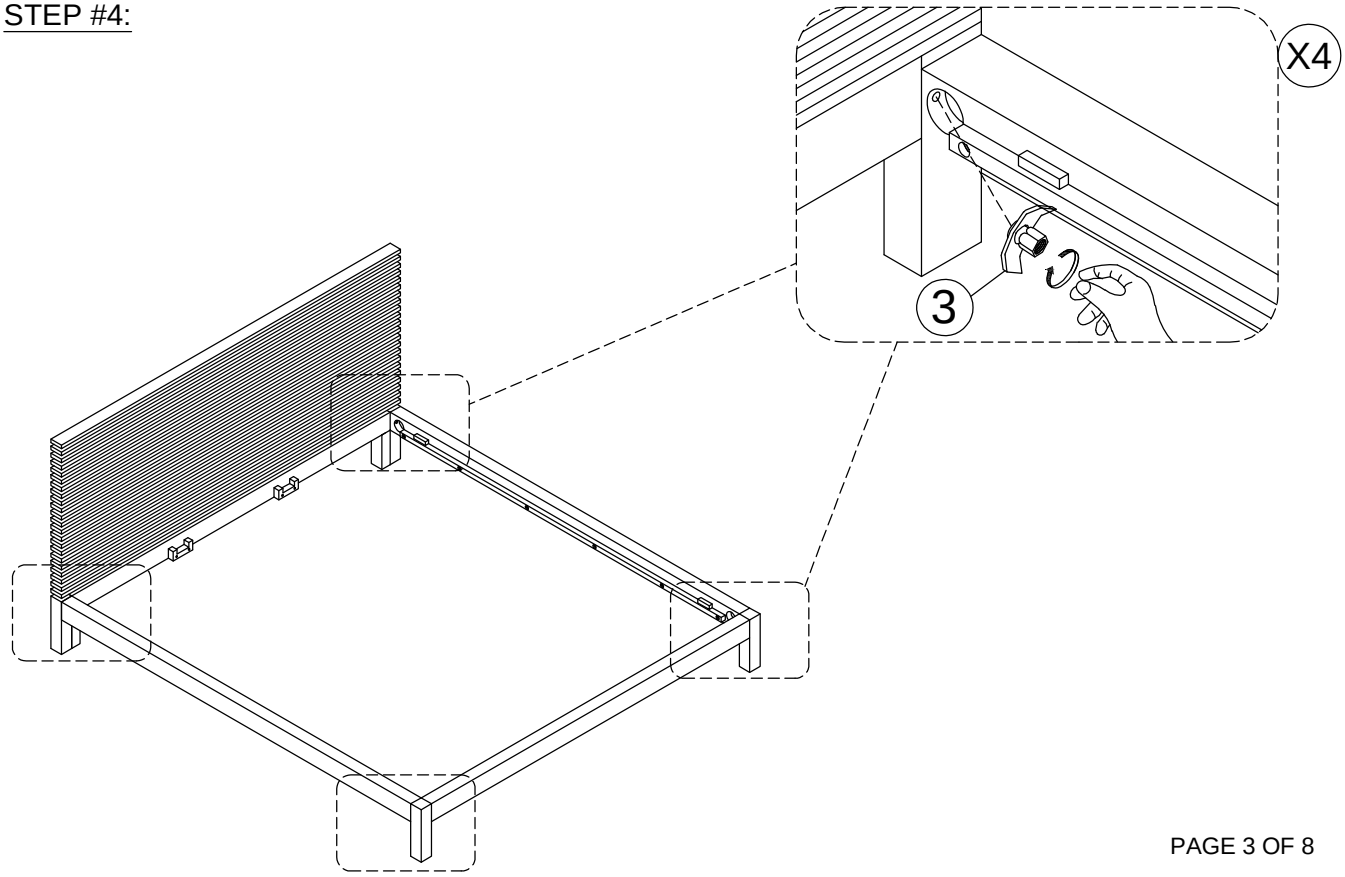

TANNER KING BED
ASSEMBLY INSTRUCTIONS

STEP #5:

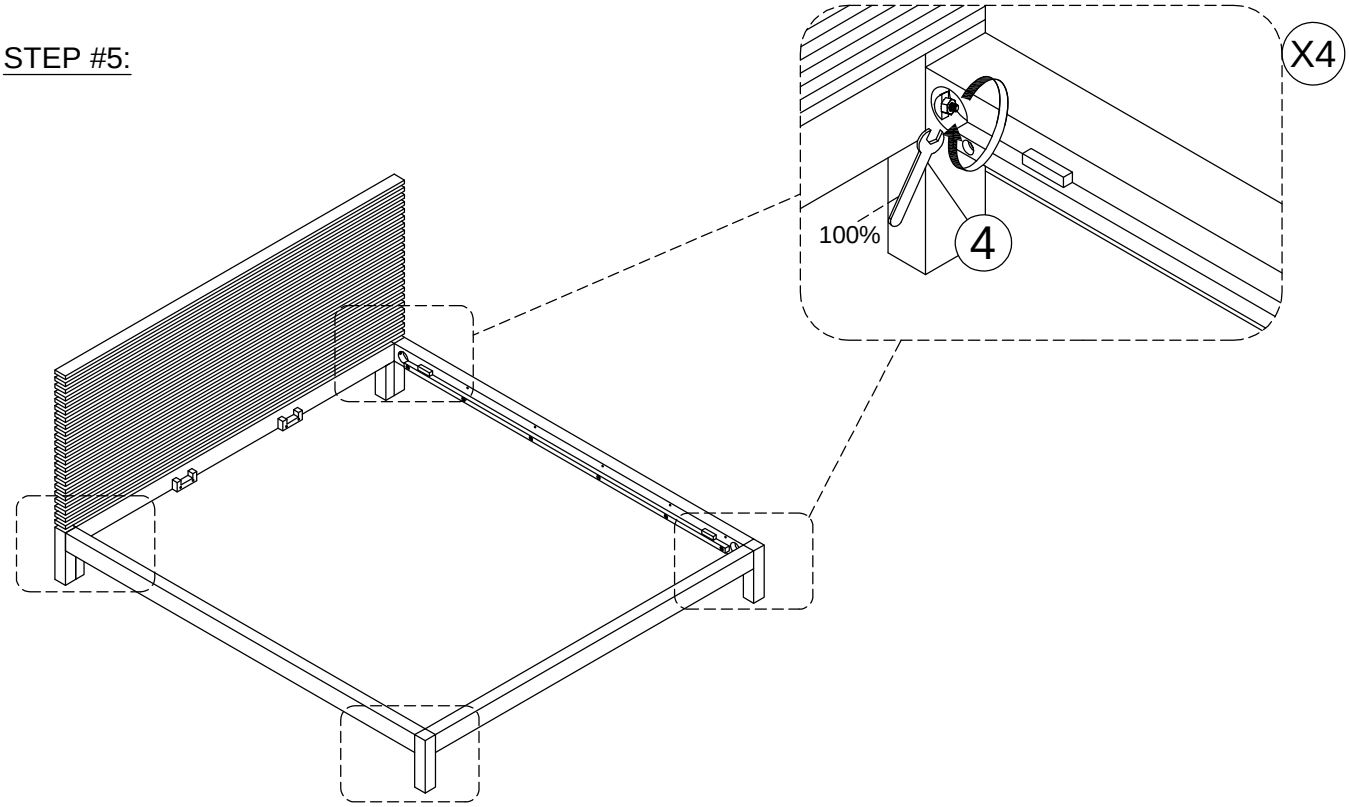

STOP

* IF USING BED FRAME WITH ADJUSTABLE MATTRESS BASE, SKIP TO APPENDIX A: ADJUSTABLE MATTRESS BASE ASSEMBLY SUPPLEMENT.
* IF USING BED FRAME WITH STANDARD BOX SPRING OR FOUNDATION CONTINUE TO STEP 6.

STEP #6:

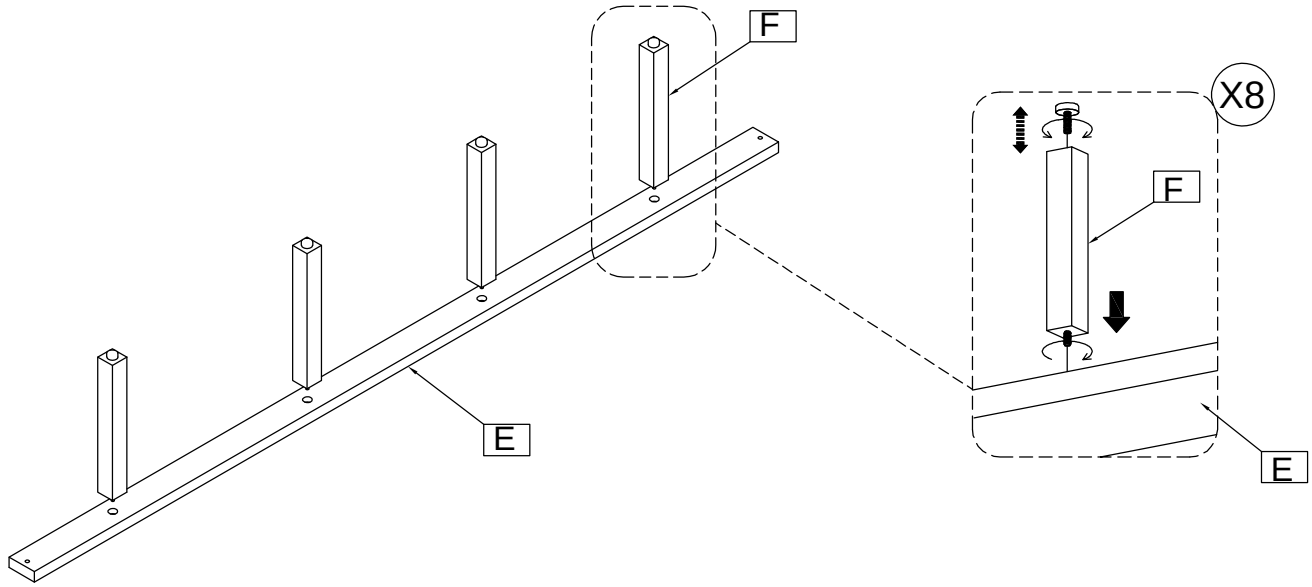

TANNER KING BED
ASSEMBLY INSTRUCTIONS

STEP #7:

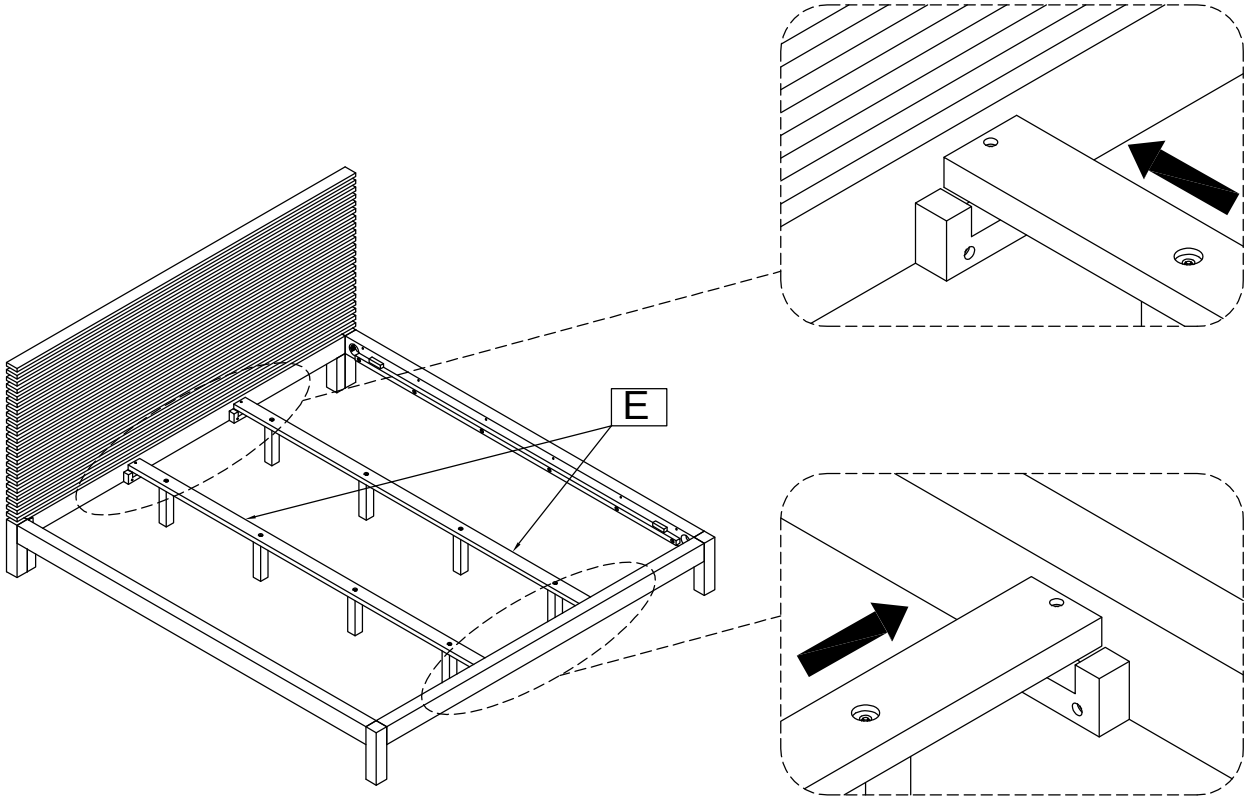

TANNER KING BED
ASSEMBLY INSTRUCTIONS

STEP #8:

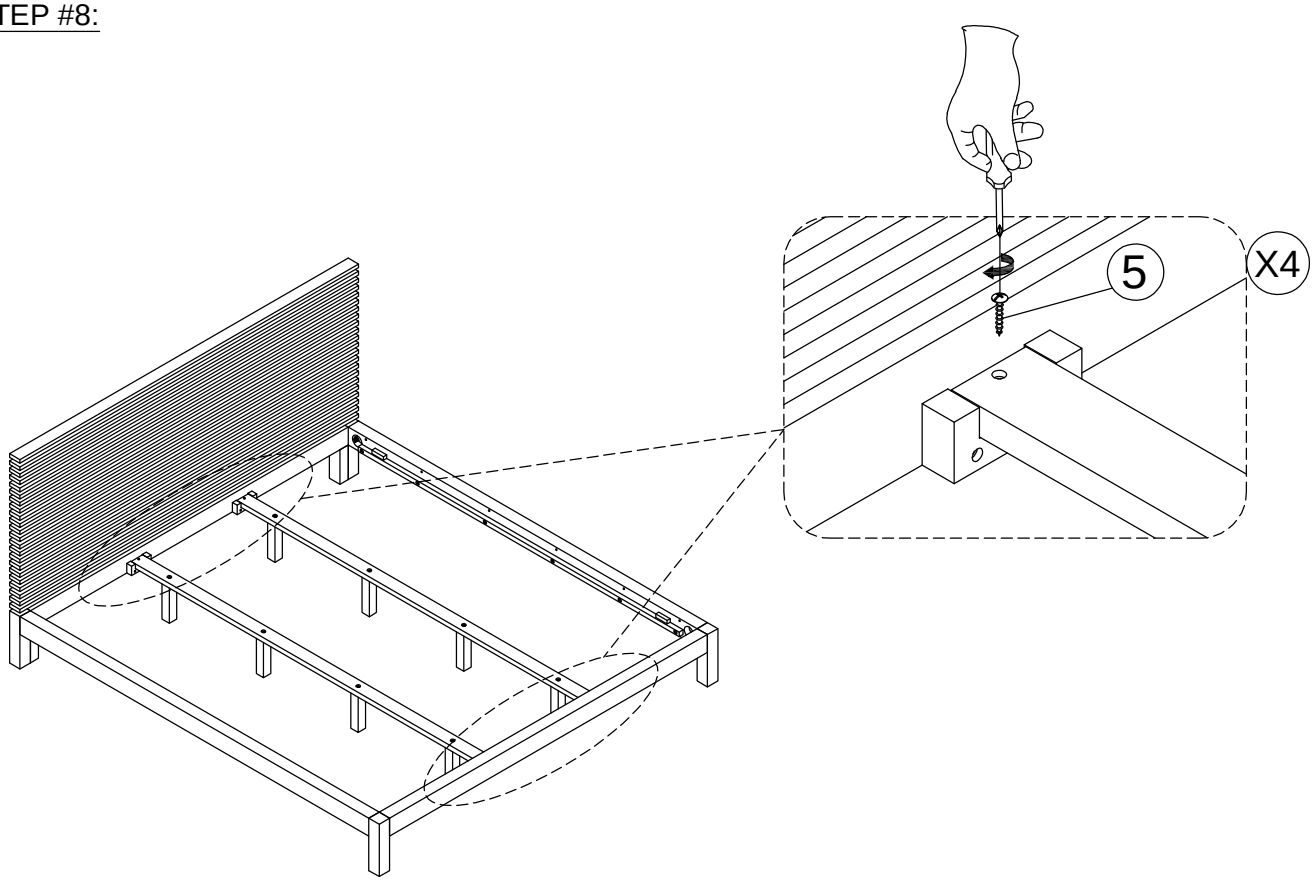

STEP #9:

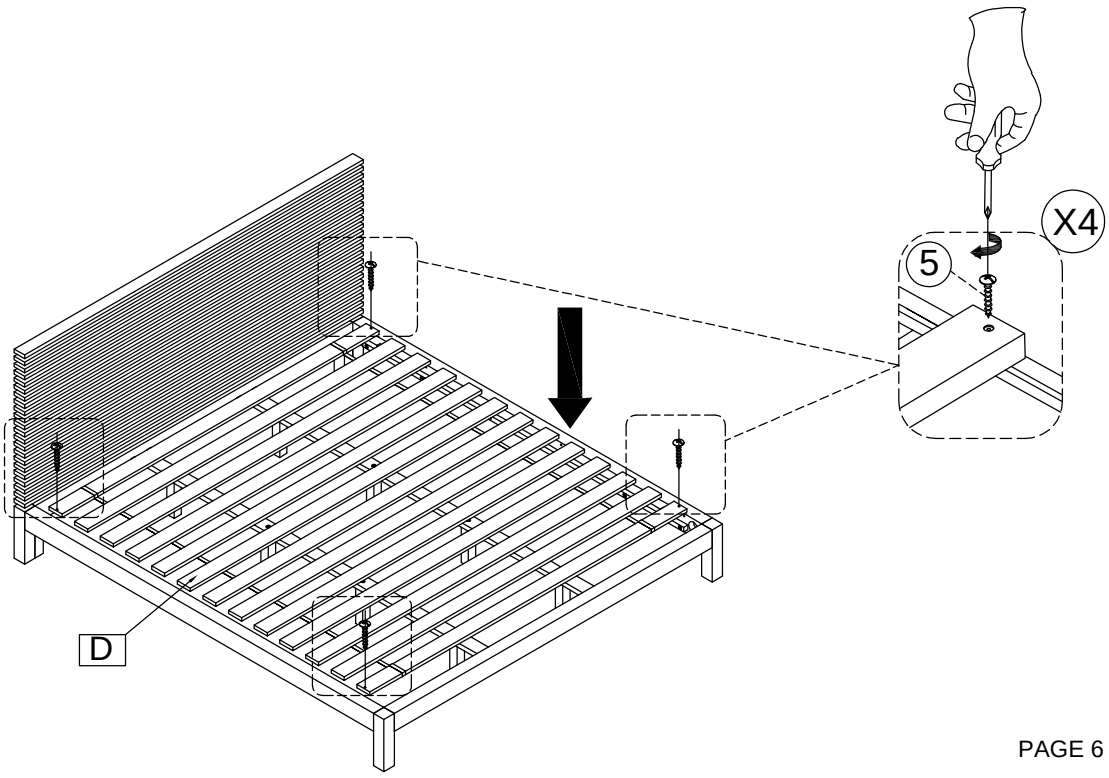

TANNER KING BED
ASSEMBLY INSTRUCTIONS

STEP #10:

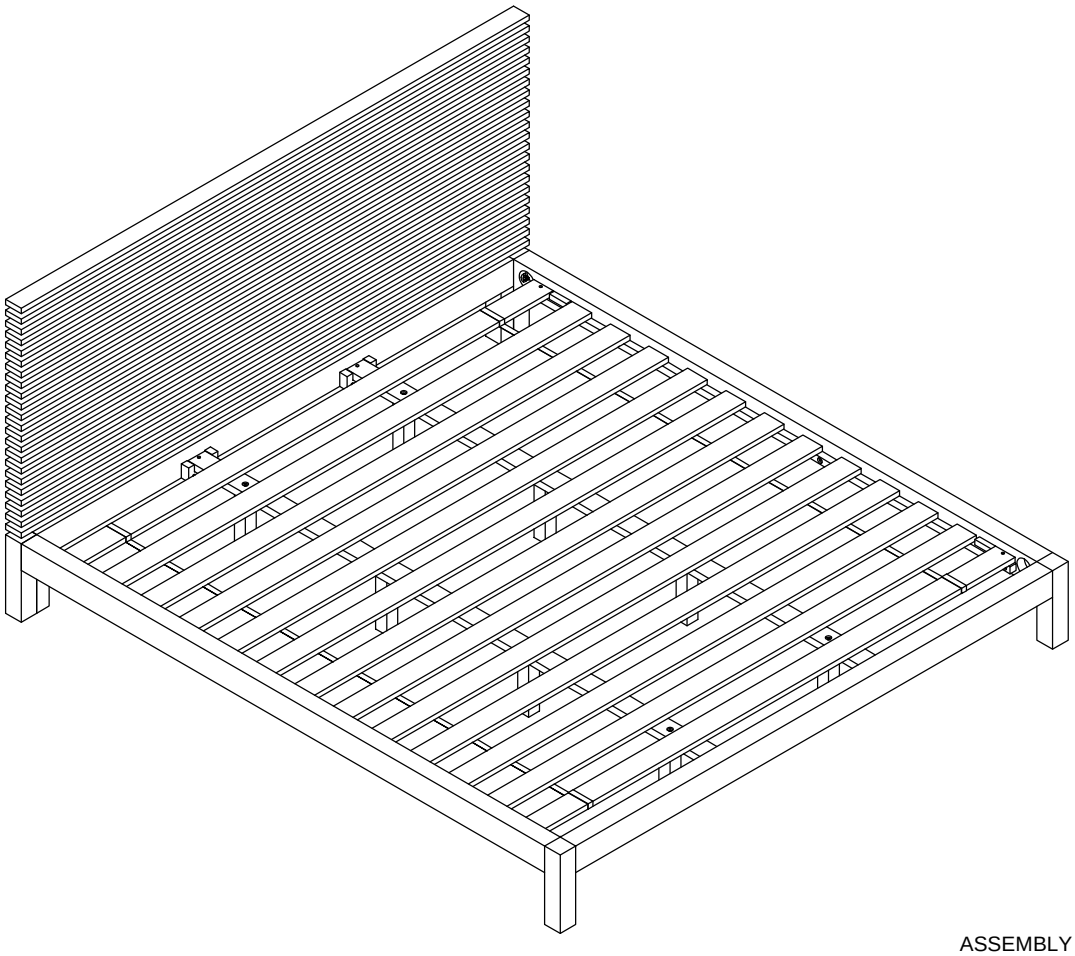

ASSEMBLY COMPLETE

INSTRUCTIONS FOR ADJUSTING LEVELER:

- POSITION THE BED IN YOUR SPACE AND LOCATE THE LEVELER UNDER EACH SUPPORT LEG.
- TURN THE LEVELER COUNTER- CLOCKWISE TO EXTEND THE LEVELER AND CLOCKWISE TO RETRACT IT.
- ADJUST EACH LEVELER UNTIL EACH SUPPORT LEG IS APPLYING EQUAL, UPWARD PRESSURE ON THE BED SUPPORT SLAT.

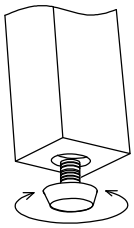

MAINTENANCE INSTRUCTIONS:

- PERIODICALLY CHECK ALL FITTINGS AND TIGHTEN IF NECESSARY, AS THEY CAN LOOSEN OVER TIME.
- ALWAYS REMOVE BOX SPRING AND MATTRESS BEFORE MOVING THE BED.
- LIFT THE BED WHEN MOVING IT. DRAGGING THE BED CAN DAMAGE THE CENTER SUPPORT.
- READJUST LEVELERS AFTER MOVING THE BED.

TANNER KING BED
ASSEMBLY INSTRUCTIONS

APPENDIX A: ADJUSTABLE MATTRESS BASE ASSEMBLY SUPPLEMENT

AN ADJUSTABLE MATTRESS BASE IS A FREESTANDING MATTRESS SUPPORT THAT SITS WITHIN THE PERIMETER OF THE BED FRAME.

IF USING THIS BED FRAME WITH A STANDARD BOX SPRING OR FOUNDATION THESE INSTRUCTIONS DO NOT APPLY.

PRE-ASSEMBLED SIDE RAIL CLEATS OBSTRUCT ADJUSTABLE BASE INSTALLATION AND OPERATION.

FOLLOW THESE INSTRUCTIONS TO REMOVE THEM.

THE FOLLOWING PARTS ARE NOT REQUIRED FOR ADJUSTABLE MATTRESS BASE INSTALLATION:

D. SLAT ROLL 1 SET

E. CENTER SLAT SUPPORT 2 PCS

F. SUPPORT LEG 8 PCS

5. WOOD SCREW (4x30MM) 8 PCS

STEP 1:

USE ALLEN KEY (6) IN BOX #2 TO UNSCREW ALLEN BOLTS AND REMOVE PRE-ASSEMBLED SIDE RAIL CLEATS.

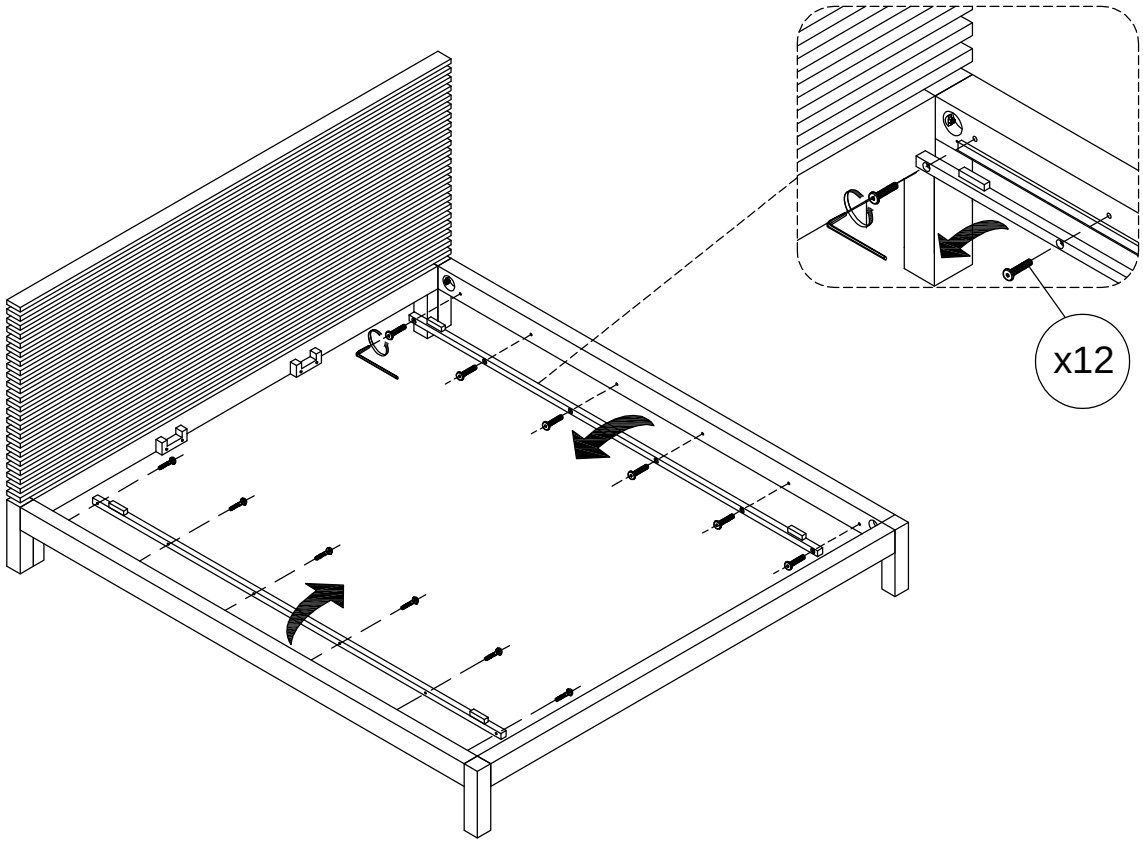

NOTE: YOU MAY WISH TO RETAIN UNUSED PARTS IF IN THE FUTURE YOU INTEND TO USE THE BED FRAME WITH A STANDARD BOX SPRING OR FOUNDATION

TANNER SPREAD PANEL WINGS W/LEFT & RIGHT DRAWERS
ASSEMBLY INSTRUCTIONS

A. LEFT SPREAD PANEL WING W/DRAWER 1 PC
B. RIGHT SPREAD PANEL WING W/DRAWER 1 PC

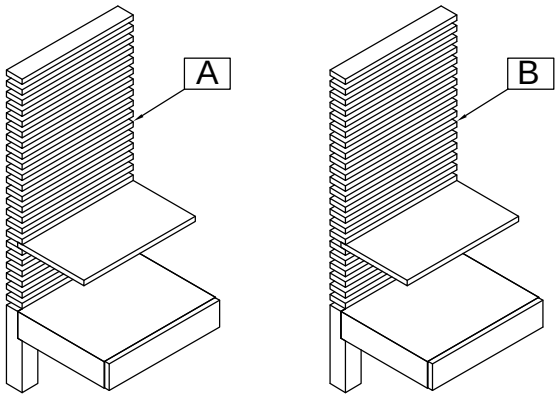

HARDWARE KIT PACKED IN BOX

No.	DESCRIPTION	IMAGE	QUANTITY
1	METAL BRACKET (3x17x60mm)		8 PCS
2	METAL BRACKET (3x60x100mm)		2 PCS
3	ALLEN BOLT (1/4"x20mm)		24 PCS
4	LOCK WASHER (1/4"x2mm)		24 PCS
5	FLAT WASHER (6x19mm)		24 PCS
6	ALLEN KEY		1 PC

FULLY ASSEMBLED

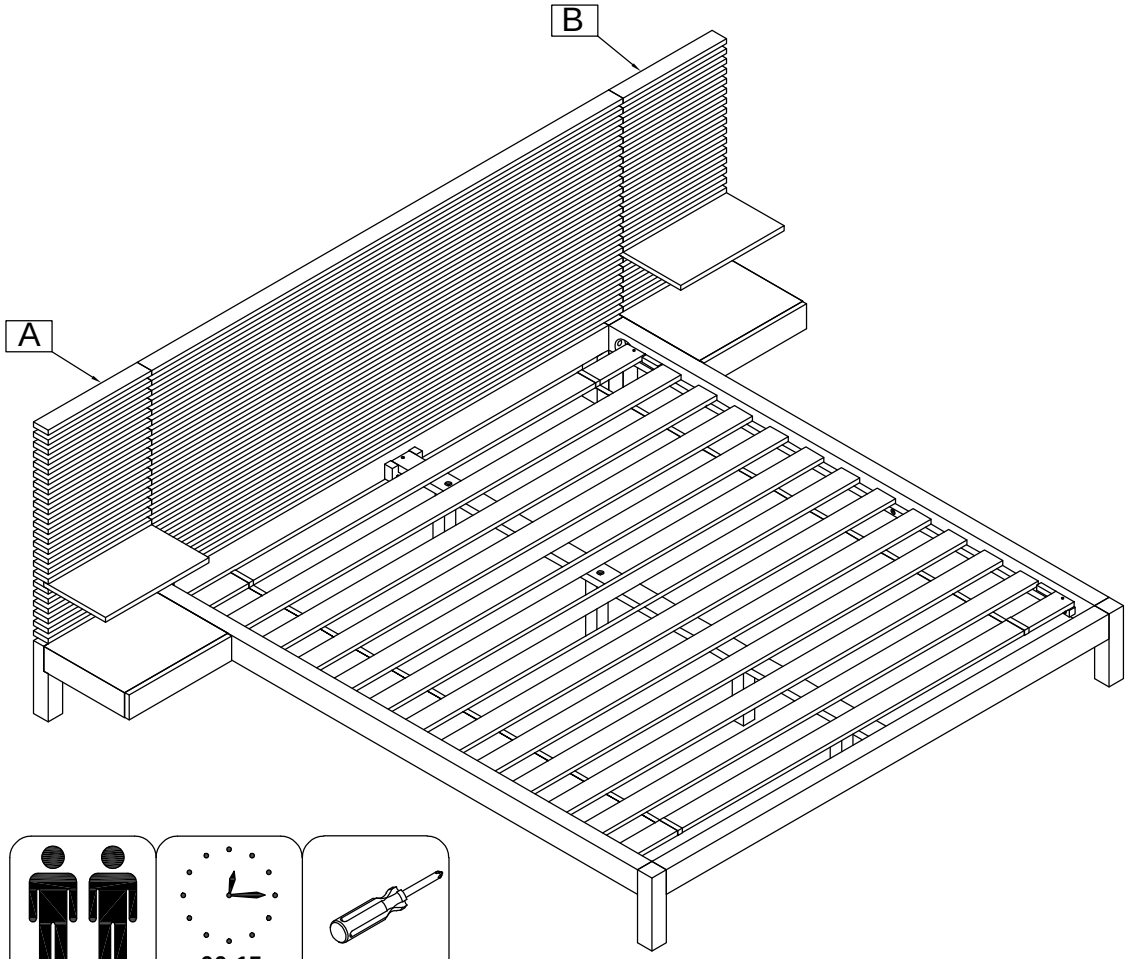

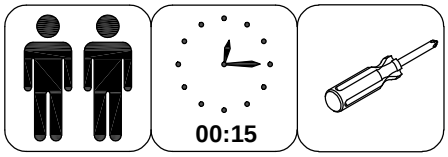

Not provided

ASSEMBLE ON A SOFT SURFACE

TANNER SPREAD PANEL WINGS W/LEFT & RIGHT DRAWERS
ASSEMBLY INSTRUCTIONS

MODUS FURNITURE

STEP #1:

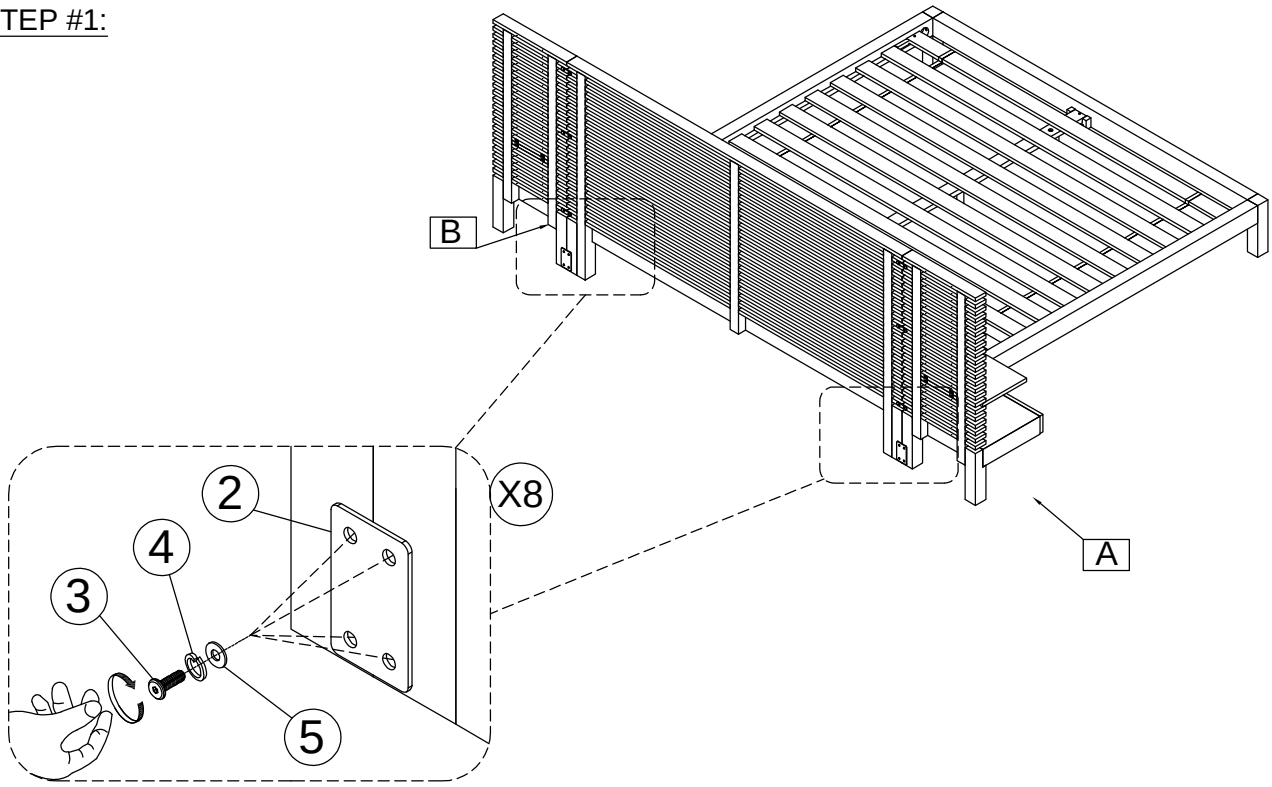

STEP #2:

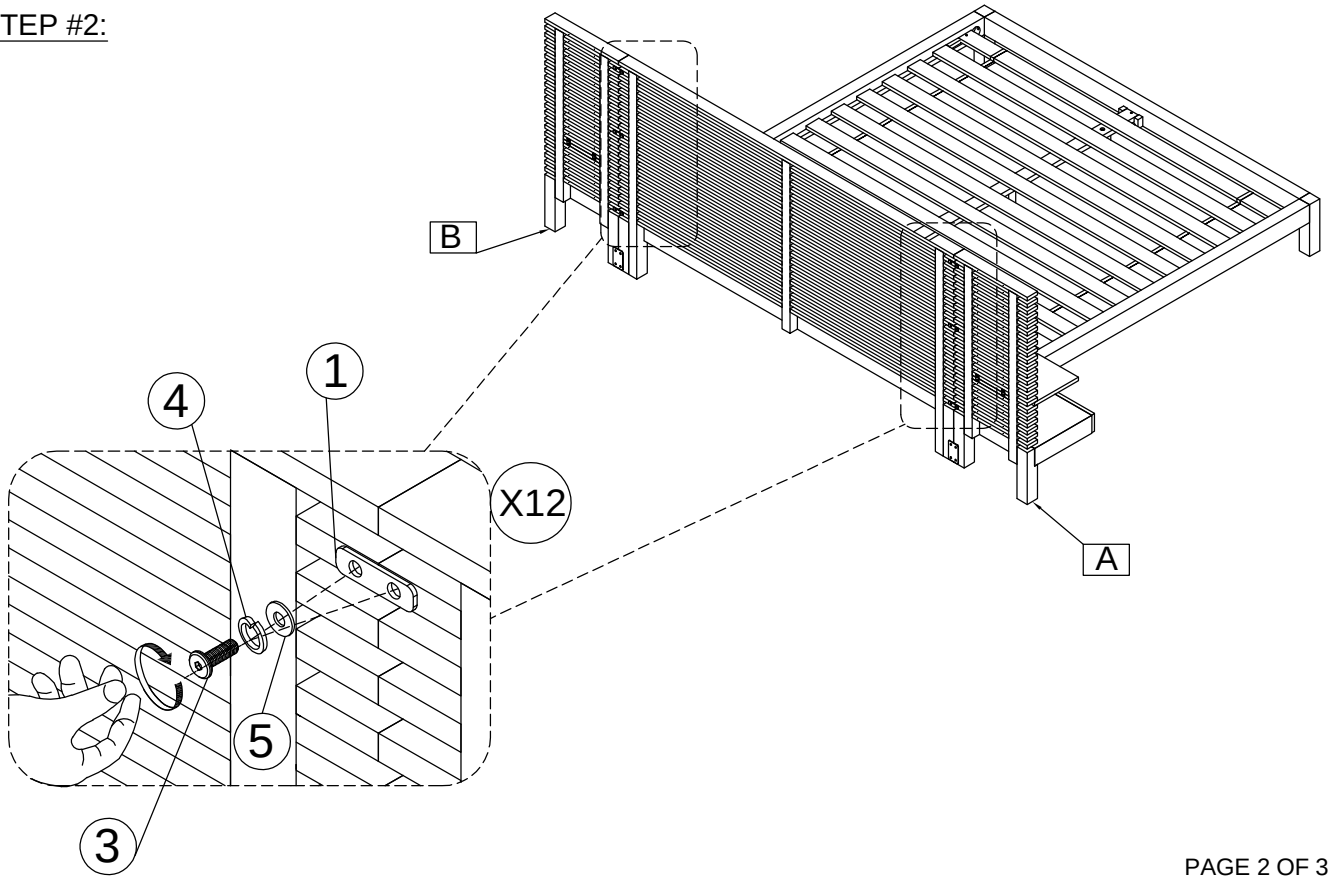

TANNER SPREAD PANEL WINGS W/LEFT & RIGHT DRAWERS
ASSEMBLY INSTRUCTIONS

MODUS FURNITURE

STEP #3:

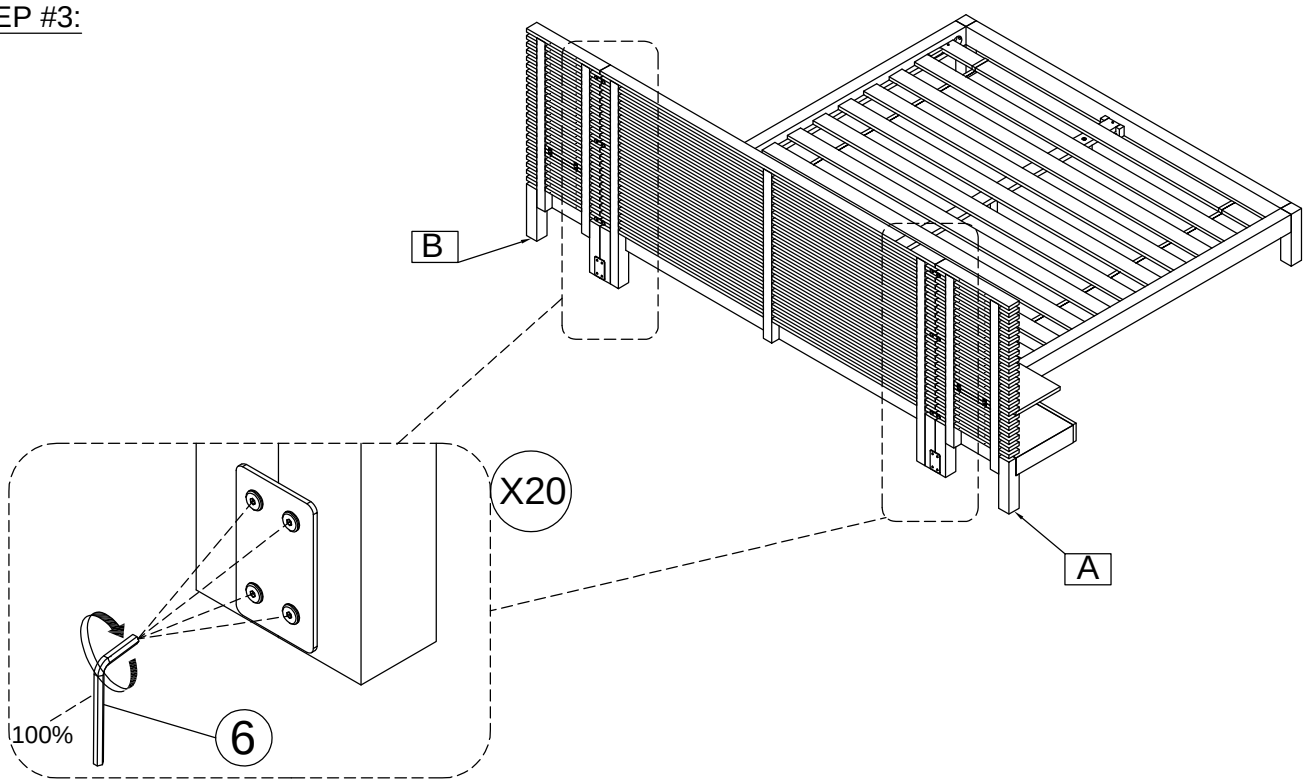

STEP #4:

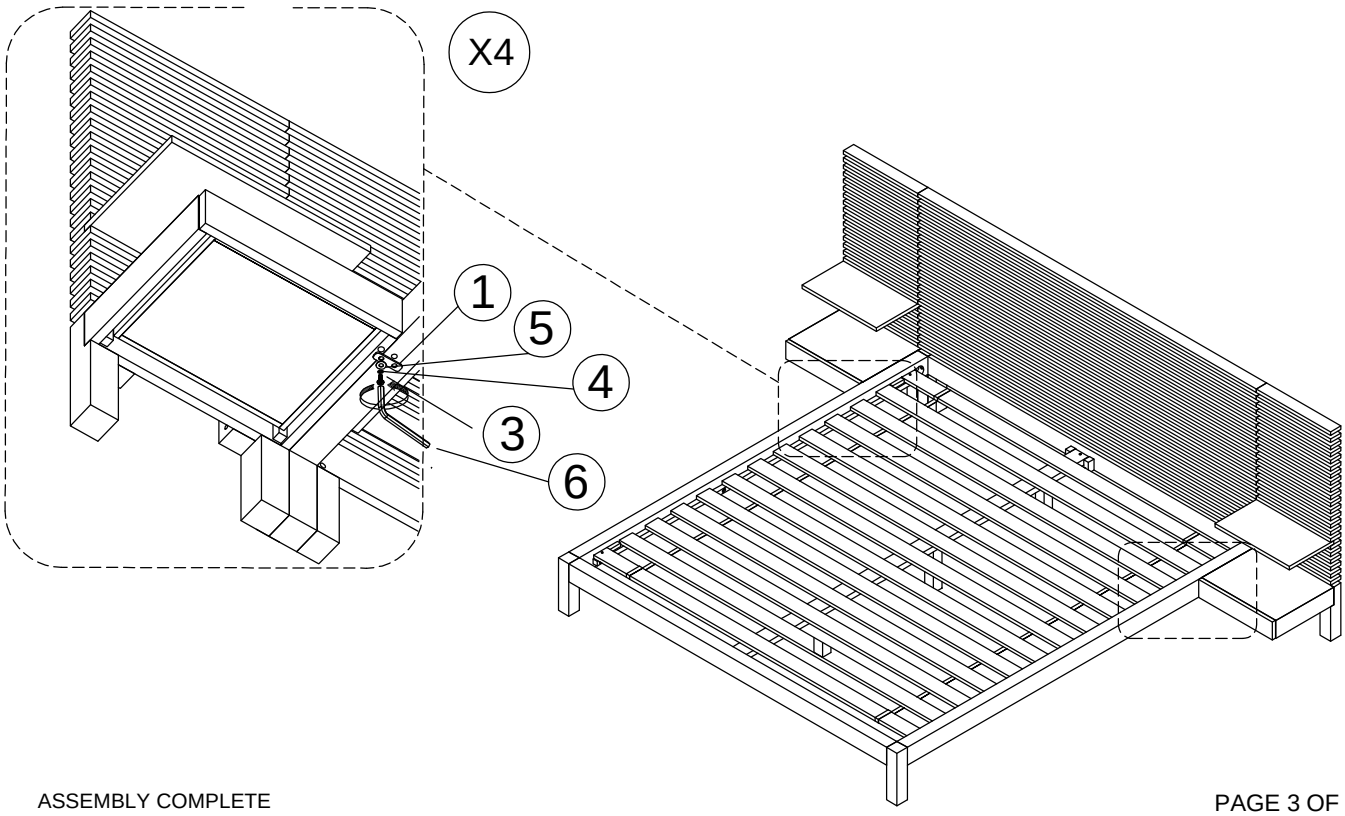

ASSEMBLY COMPLETE

TANNER CAL KING BED
ASSEMBLY INSTRUCTIONS

BOX #1

A. HEADBOARD 1 PC

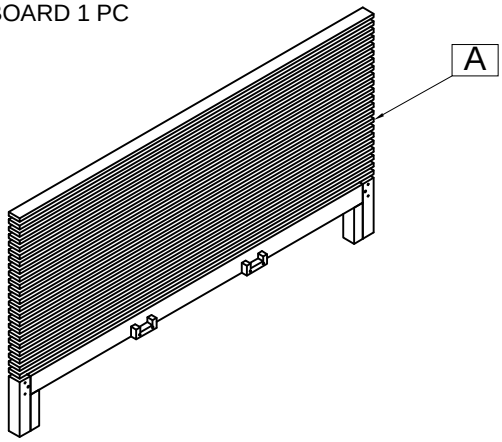

BOX #2

B. FOOTBOARD 1 PC
D. SLAT ROLL 1 SET
BED HARDWARE BOX

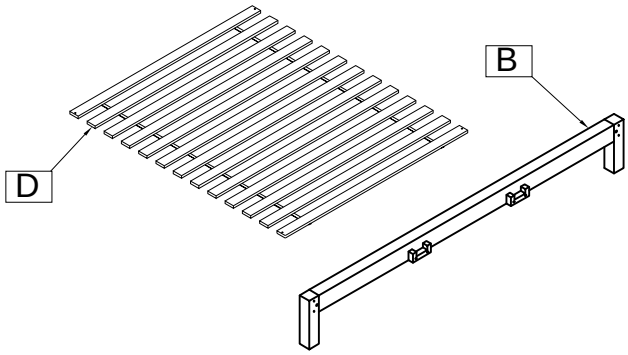

HARDWARE KIT PACKED IN BOX #2

No.	DESCRIPTION	IMAGE	QUANTITY
1	METAL DOWEL (8x40mm)		8 PCS
2	ALL- THREAD BOLT (5/16"x80mm)		4 PCS
3	THREADED HALF MOON WASHER NUT (5/16")		4 PCS
4	SPANNER		1 PC
5	ALLEN BOLT (1/4"x50mm)		12 PCS
6	LOCK WASHER (5/16"x2mm)		12 PCS
7	FLAT WASHER (8x19mm)		12 PCS
8	WOOD SCREW (4x30mm)		8 PCS
9	ALLEN KEY		1 PC

Not provided

ASSEMBLE ON A SOFT SURFACE

BOX #3 :

C. SIDE RAIL 2 PCS
E. CENTER SLAT SUPPORT 2 PCS
F. MATTRESS SPACER 2 PCS
G. SUPPORT LEG 8 PCS

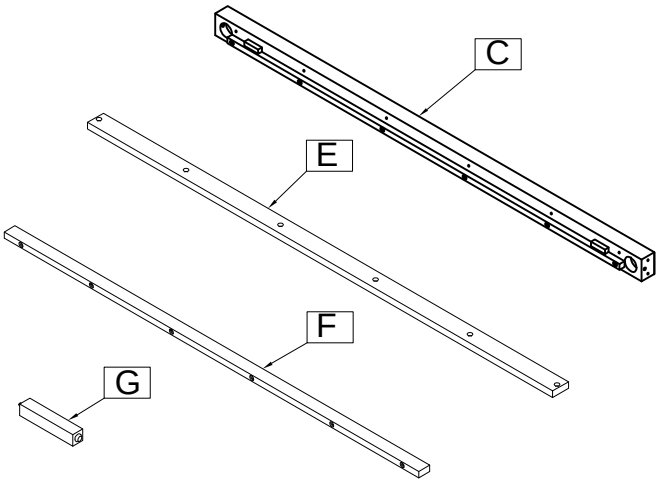

FULLY ASSEMBLED

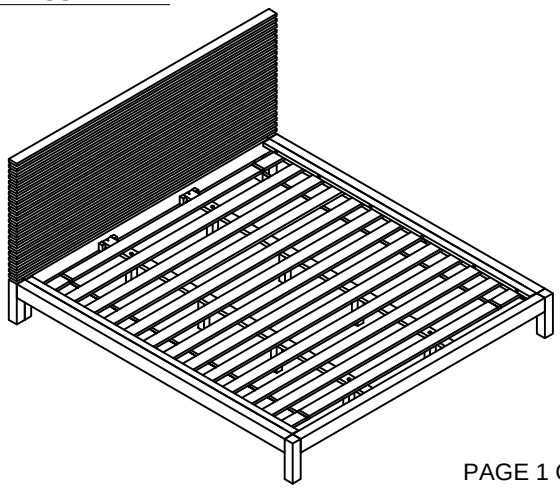

TANNER CAL KING BED
ASSEMBLY INSTRUCTIONS

STEP #1:

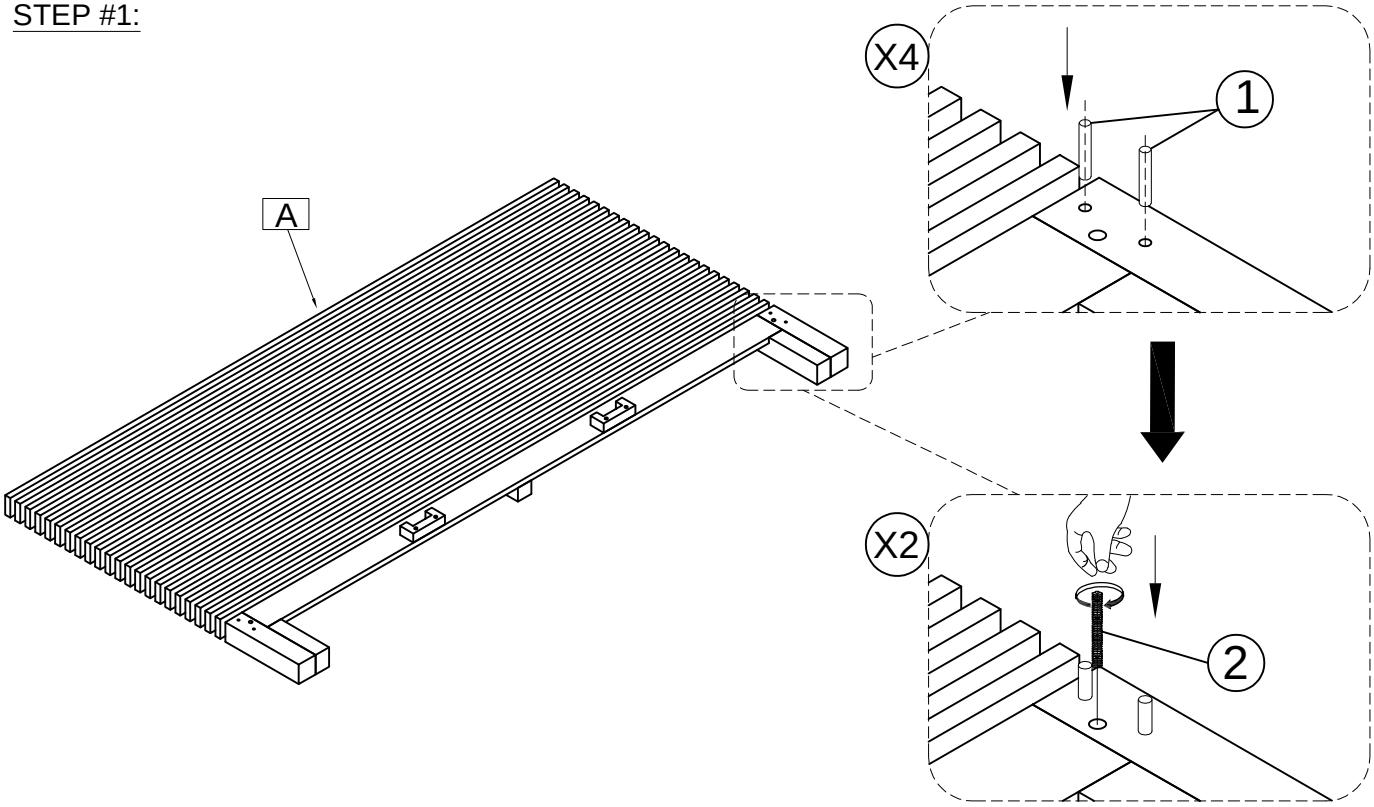

STEP #2:

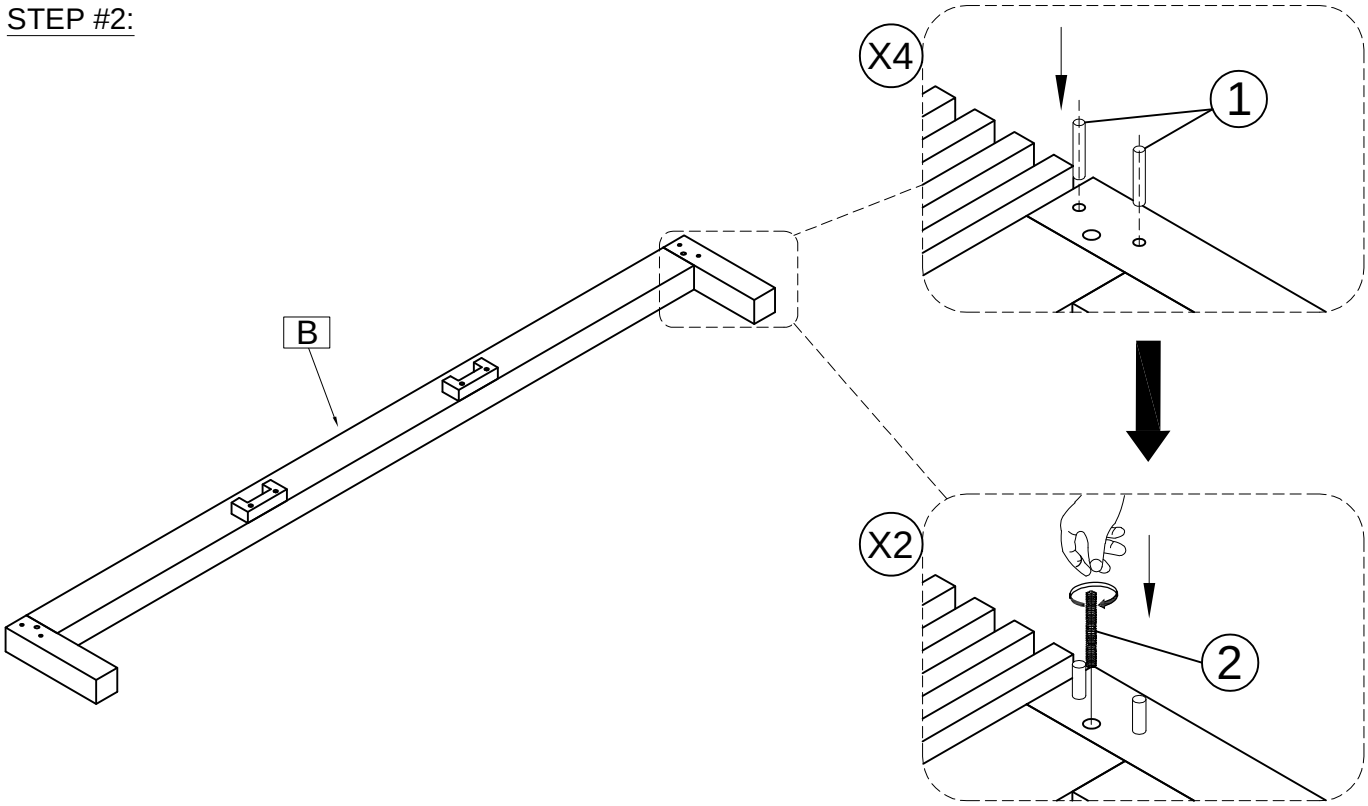

TANNER CAL KING BED
ASSEMBLY INSTRUCTIONS

STEP #3:

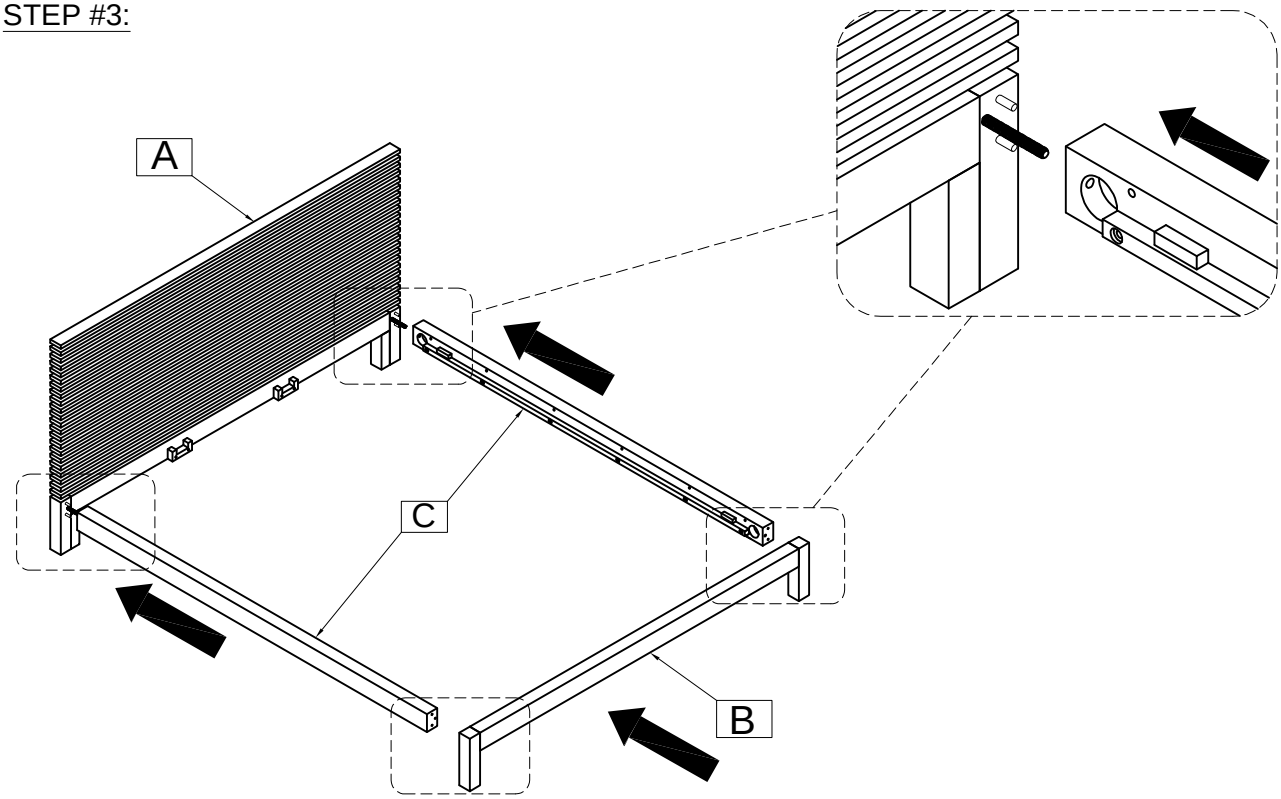

STEP #4:

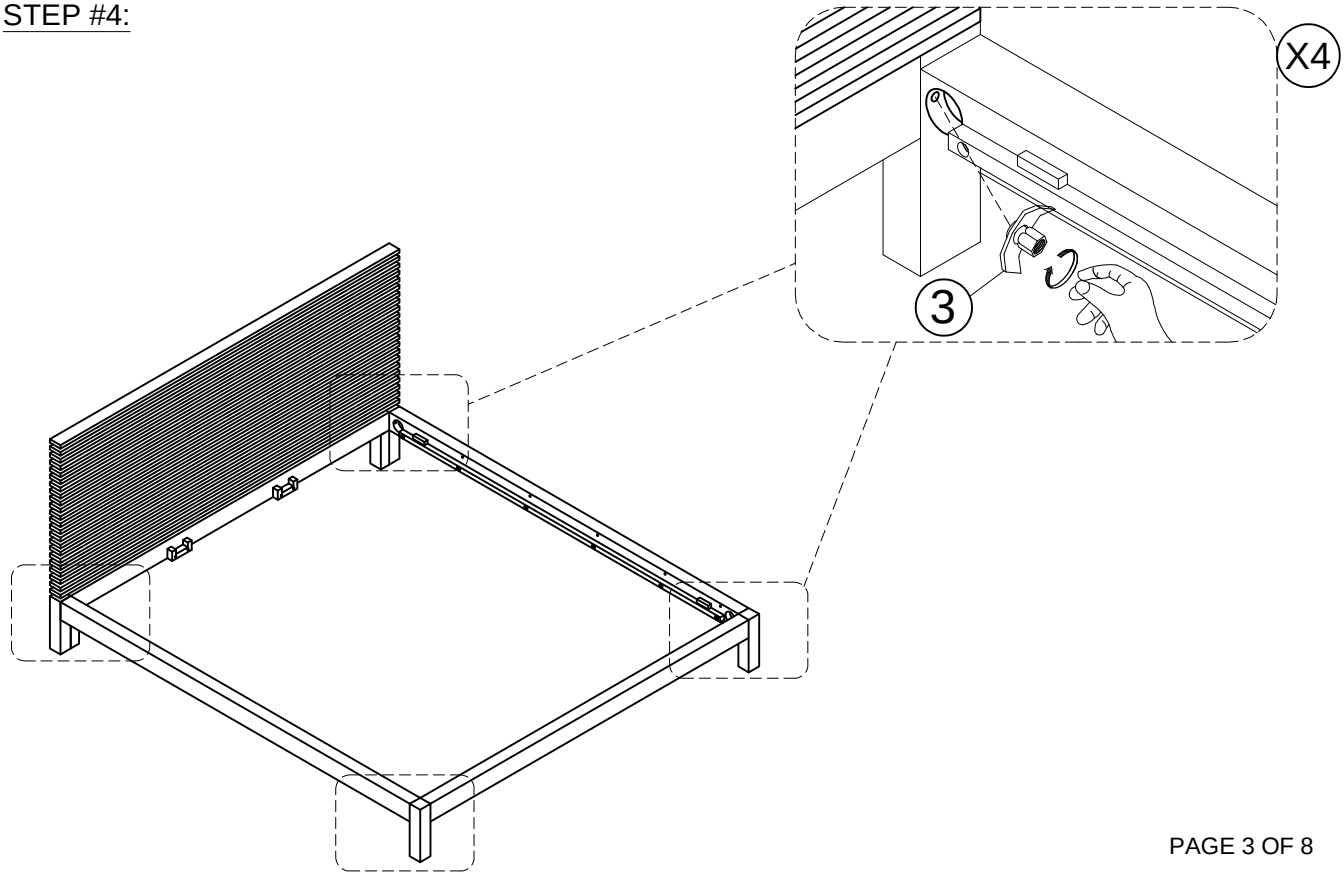

TANNER CAL KING BED
ASSEMBLY INSTRUCTIONS

STEP #5:

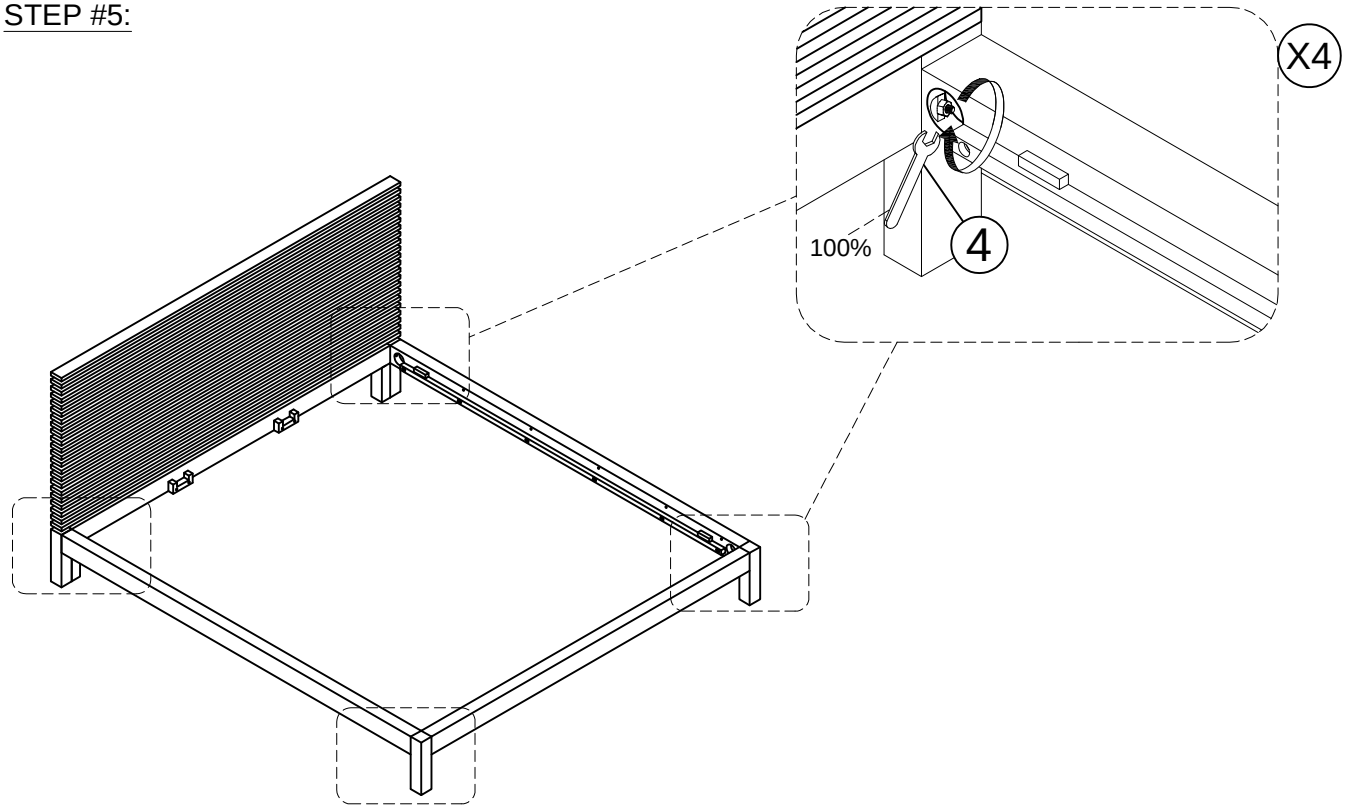

STOP

* IF USING BED FRAME WITH ADJUSTABLE MATTRESS BASE, SKIP TO APPENDIX A: ADJUSTABLE MATTRESS BASE ASSEMBLY SUPPLEMENT.
* IF USING BED FRAME WITH STANDARD BOX SPRING OR FOUNDATION CONTINUE TO STEP 6.

STEP #6:

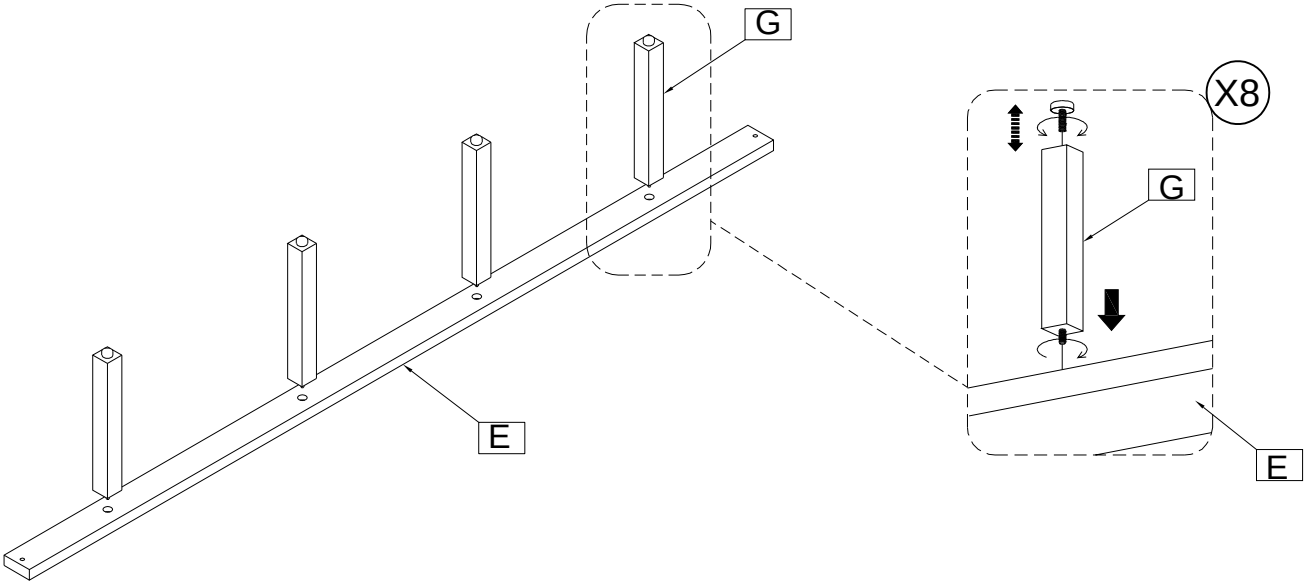

TANNER CAL KING BED
ASSEMBLY INSTRUCTIONS

STEP #7:

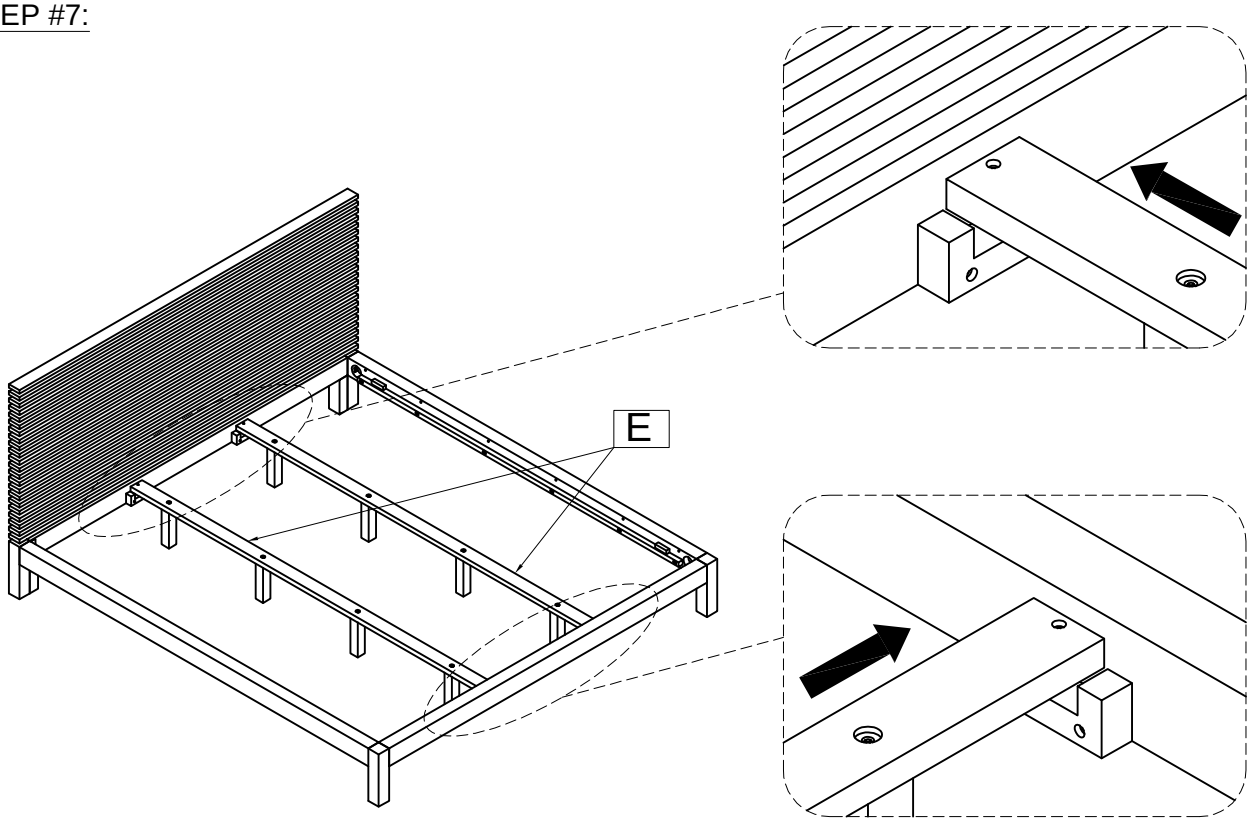

STEP #8:

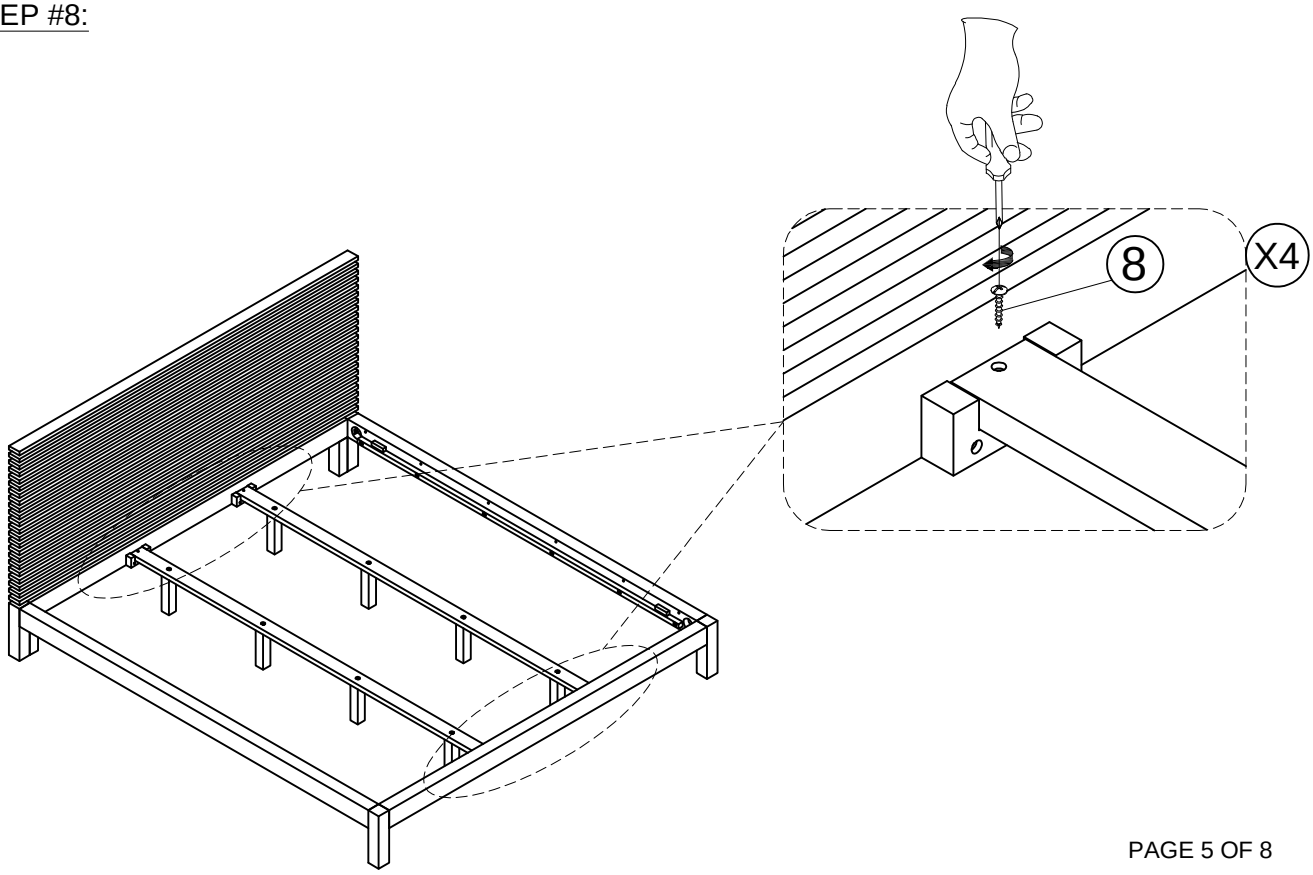

TANNER CAL KING BED
ASSEMBLY INSTRUCTIONS

STEP #9:

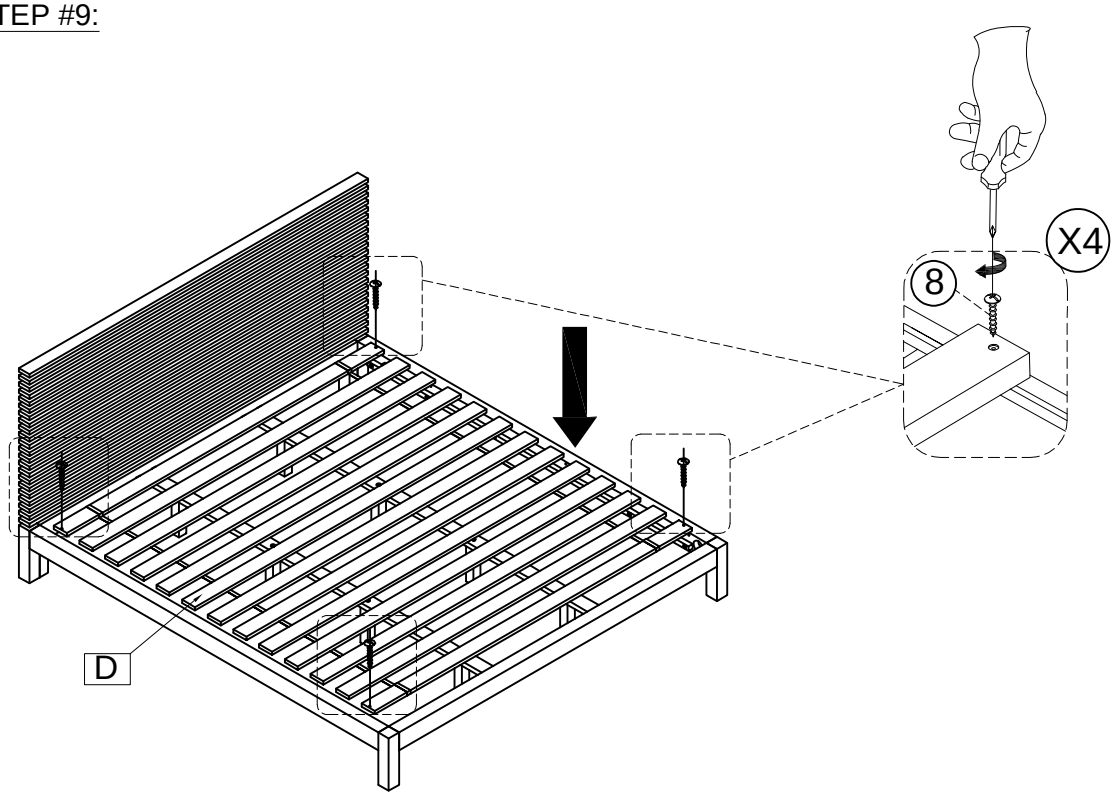

STEP #10:

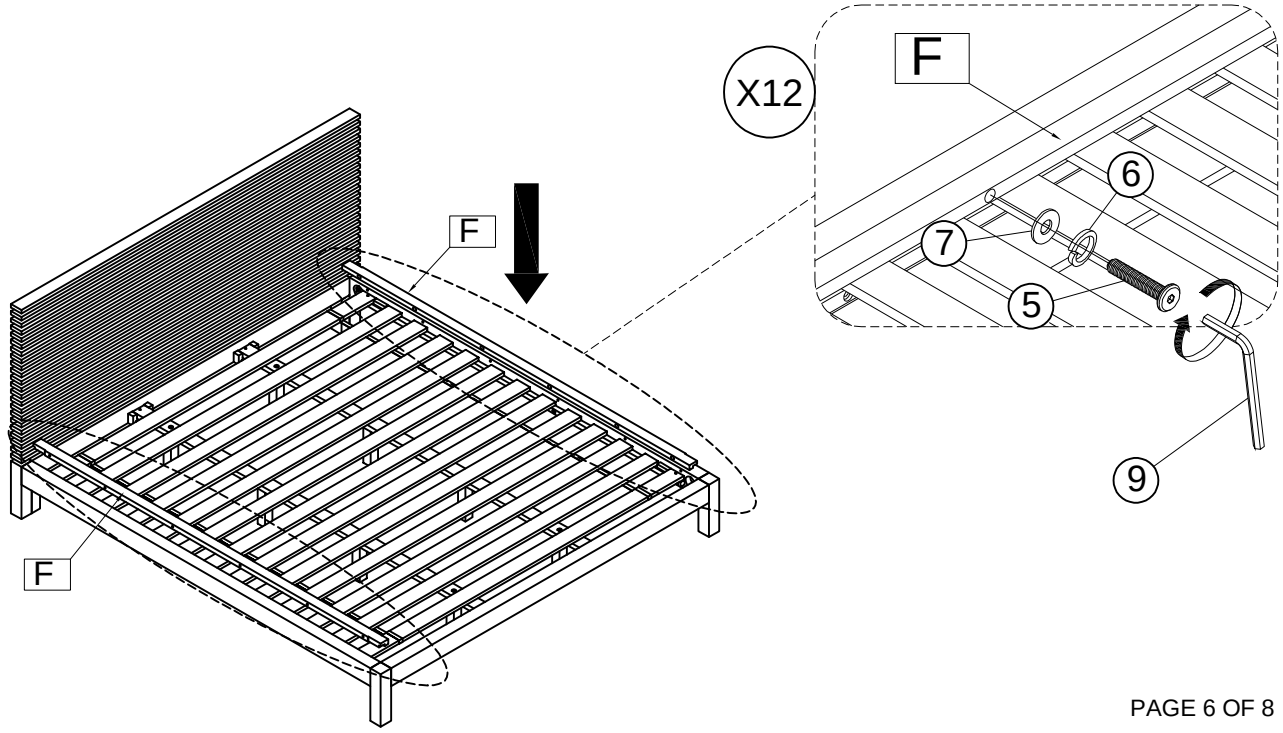

TANNER CAL KING BED
ASSEMBLY INSTRUCTIONS

STEP #11:

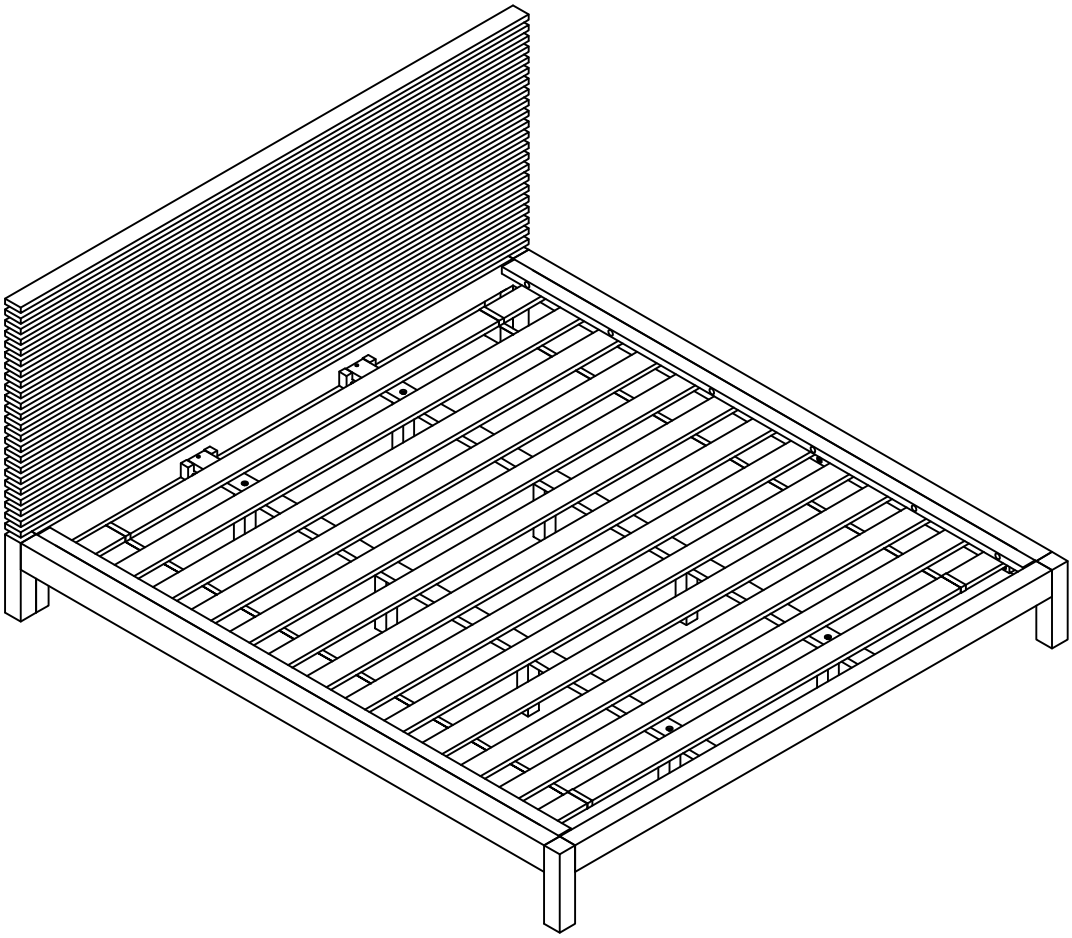

ASSEMBLY COMPLETE

INSTRUCTIONS FOR ADJUSTING LEVELER:

- POSITION THE BED IN YOUR SPACE AND LOCATE THE LEVELER UNDER EACH SUPPORT LEG.
- TURN THE LEVELER COUNTER- CLOCKWISE TO EXTEND THE LEVELER AND CLOCKWISE TO RETRACT IT.
- ADJUST EACH LEVELER UNTIL EACH SUPPORT LEG IS APPLYING EQUAL, UPWARD PRESSURE ON THE BED SUPPORT SLAT.

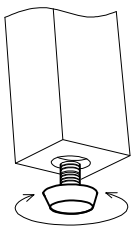

MAINTENANCE INSTRUCTIONS:

- PERIODICALLY CHECK ALL FITTINGS AND TIGHTEN IF NECESSARY, AS THEY CAN LOOSEN OVER TIME.
- ALWAYS REMOVE BOX SPRING AND MATTRESS BEFORE MOVING THE BED.
- LIFT THE BED WHEN MOVING IT. DRAGGING THE BED CAN DAMAGE THE CENTER SUPPORT.
- READJUST LEVELERS AFTER MOVING THE BED.

TANNER CAL KING BED
ASSEMBLY INSTRUCTIONS

APPENDIX A: ADJUSTABLE MATTRESS BASE ASSEMBLY SUPPLEMENT

AN ADJUSTABLE MATTRESS BASE IS A FREESTANDING MATTRESS SUPPORT THAT SITS WITHIN THE PERIMETER OF THE BED FRAME.

IF USING THIS BED FRAME WITH A STANDARD BOX SPRING OR FOUNDATION THESE INSTRUCTIONS DO NOT APPLY.

PRE-ASSEMBLED SIDE RAIL CLEATS OBSTRUCT ADJUSTABLE BASE INSTALLATION AND OPERATION.

FOLLOW THESE INSTRUCTIONS TO REMOVE THEM.

THE FOLLOWING PARTS ARE NOT REQUIRED FOR ADJUSTABLE MATTRESS BASE INSTALLATION:

D. SLAT ROLL 1 SET
E. CENTER SLAT SUPPORT 2 PCS
F. MATTRESS SPACER 2 PCS
G. SUPPORT LEG 8 PCS

5. ALLEN BOLT (1/4"x50mm) 12 PCS
6. LOCK WASHER (5/16"x2mm) 12 PCS
7. FLAT WASHER (8x19mm) 12 PCS
8. WOOD SCREW (4x30MM) 8 PCS

STEP 1:

USE ALLEN KEY (9) IN BOX #2 TO UNSCREW ALLEN BOLTS AND REMOVE PRE-ASSEMBLED SIDE RAIL CLEATS.

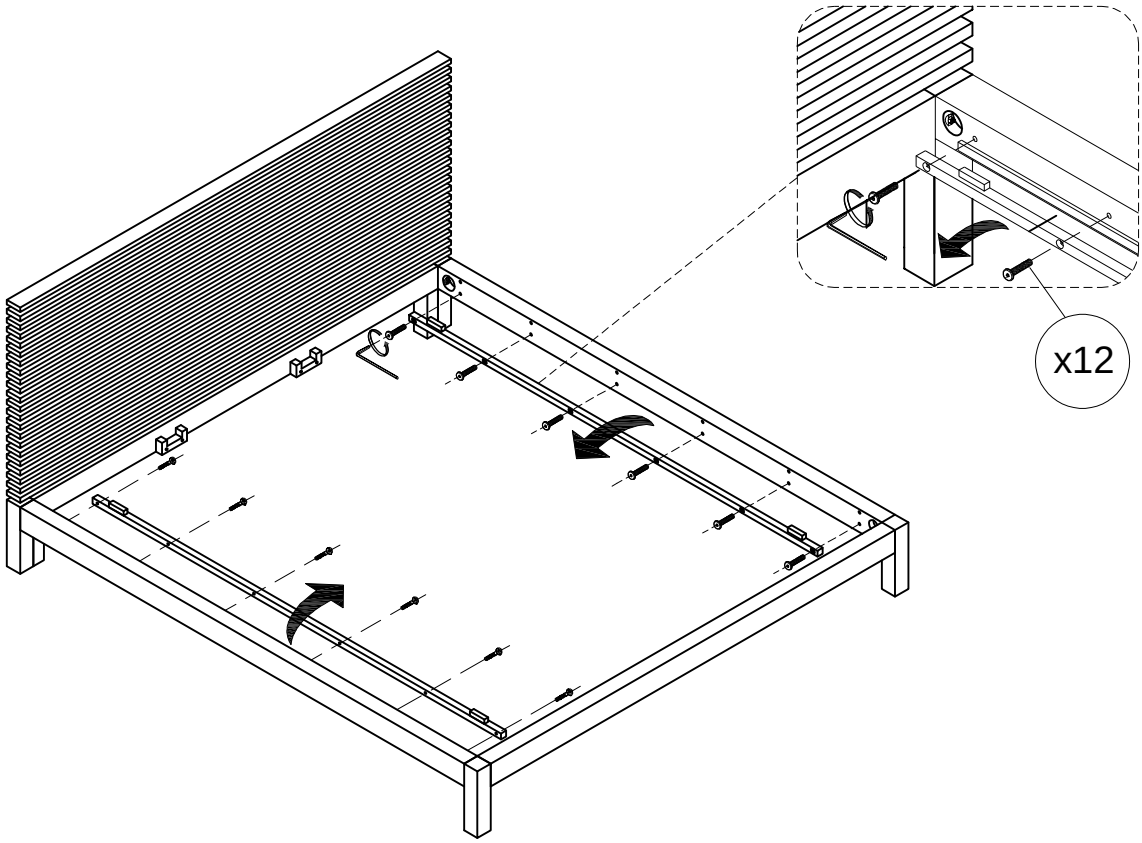

NOTE: YOU MAY WISH TO RETAIN UNUSED PARTS IF IN THE FUTURE YOU INTEND TO USE THE BED FRAME WITH A STANDARD BOX SPRING OR FOUNDATION

TANNER SPREAD PANEL WINGS W/LEFT & RIGHT DRAWERS
ASSEMBLY INSTRUCTIONS

A. LEFT SPREAD PANEL WING W/DRAWER 1 PC
B. RIGHT SPREAD PANEL WING W/DRAWER 1 PC

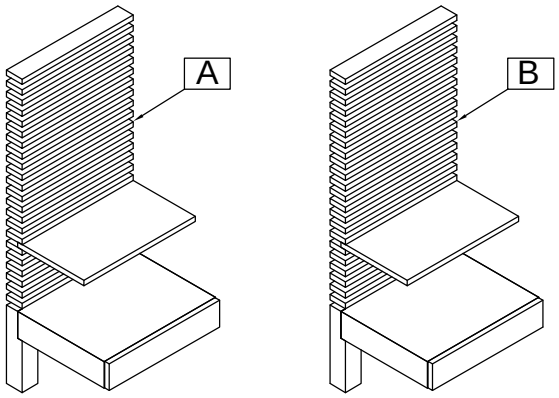

HARDWARE KIT PACKED IN BOX

No.	DESCRIPTION	IMAGE	QUANTITY
1	METAL BRACKET (3x17x60mm)		8 PCS
2	METAL BRACKET (3x60x100mm)		2 PCS
3	ALLEN BOLT (1/4"x20mm)		24 PCS
4	LOCK WASHER (1/4"x2mm)		24 PCS
5	FLAT WASHER (6x19mm)		24 PCS
6	ALLEN KEY		1 PC

FULLY ASSEMBLED

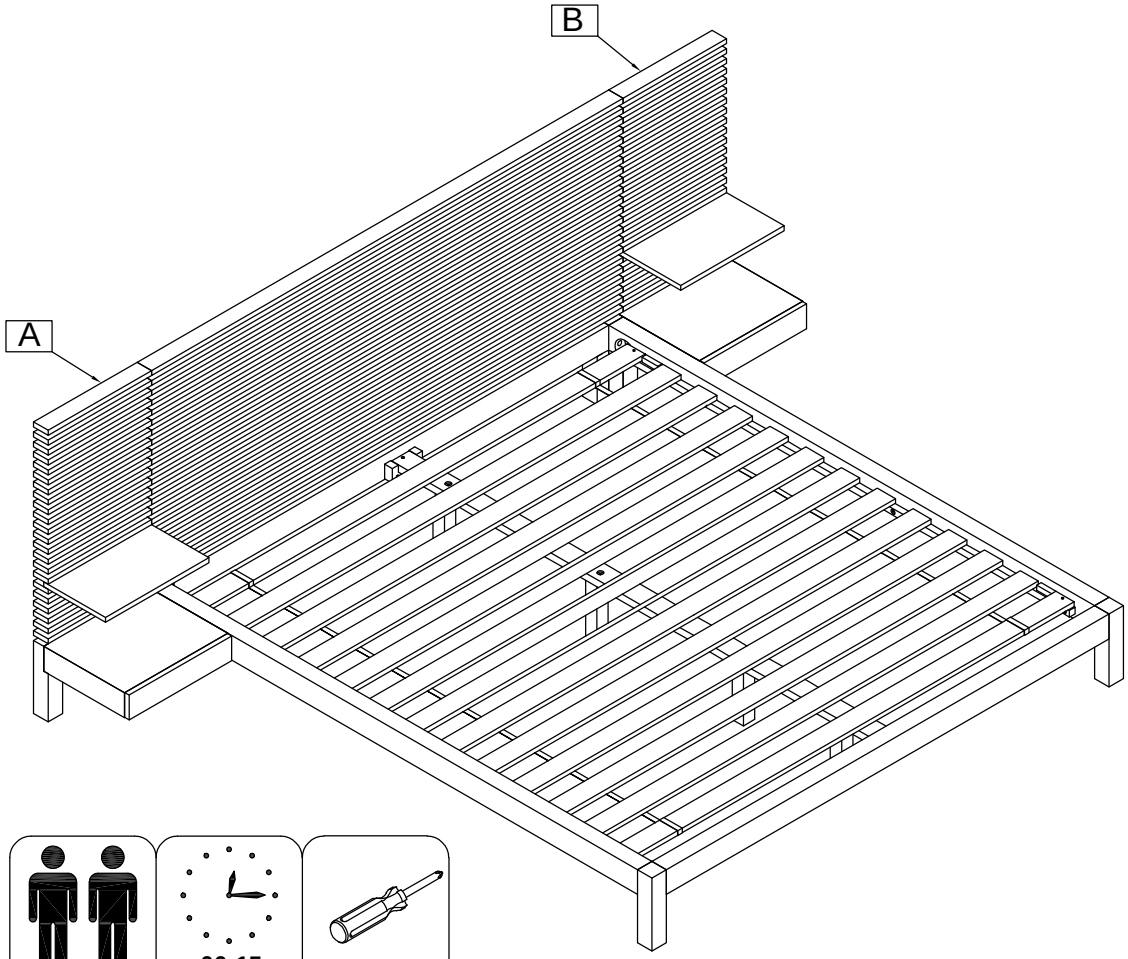

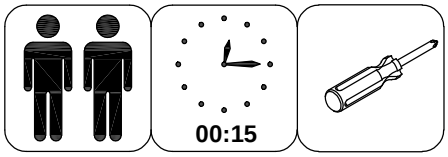

Not provided

ASSEMBLE ON A SOFT SURFACE

TANNER SPREAD PANEL WINGS W/LEFT & RIGHT DRAWERS
ASSEMBLY INSTRUCTIONS

MODUS FURNITURE

STEP #1:

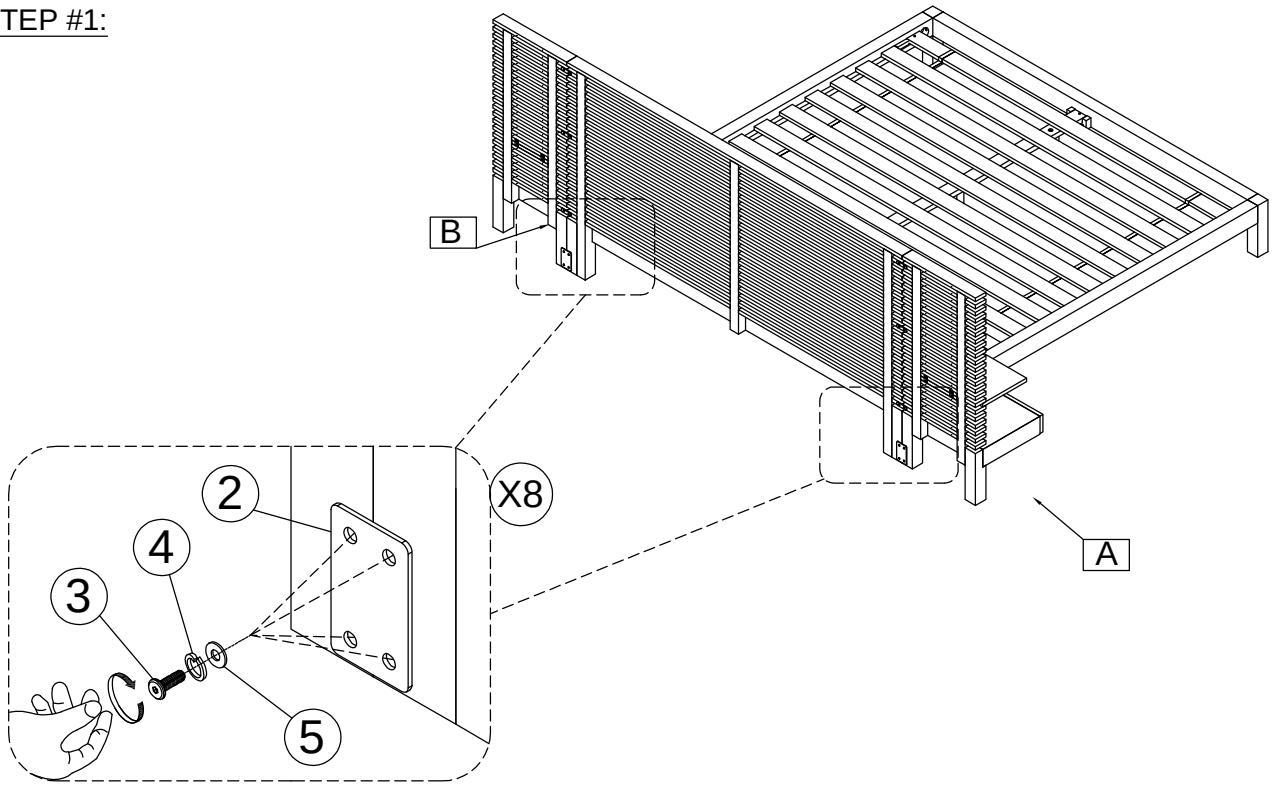

STEP #2:

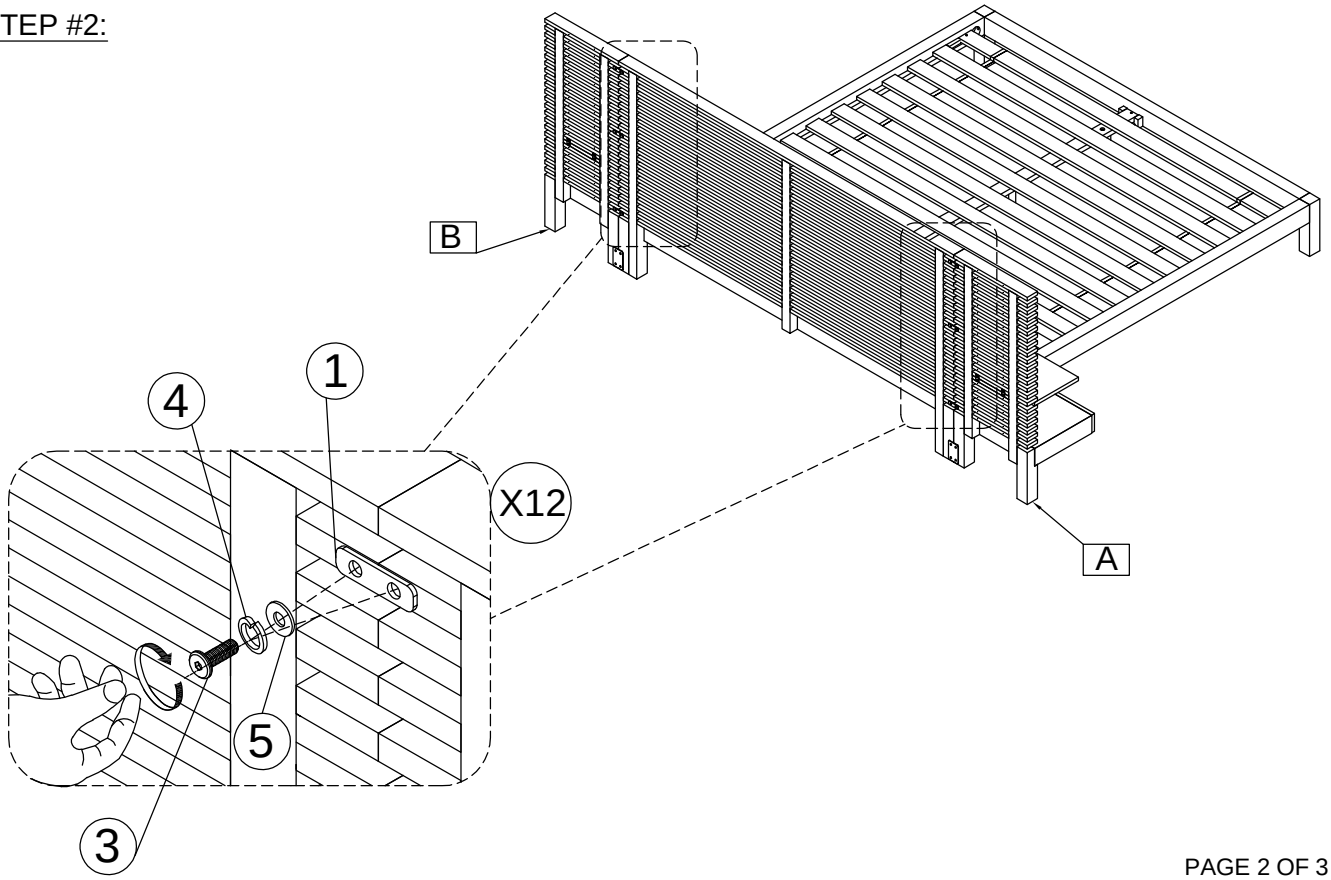

TANNER SPREAD PANEL WINGS W/LEFT & RIGHT DRAWERS
ASSEMBLY INSTRUCTIONS

MODUS FURNITURE

STEP #3:

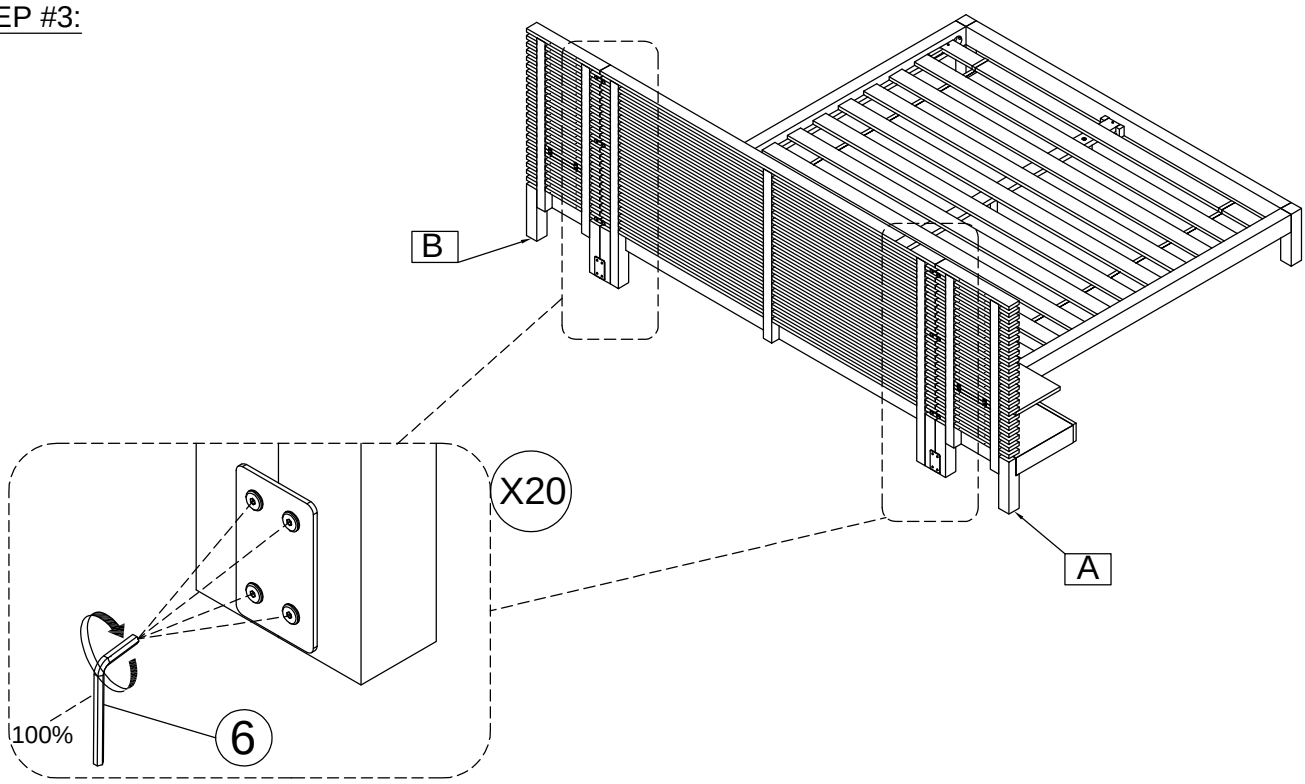

STEP #4:

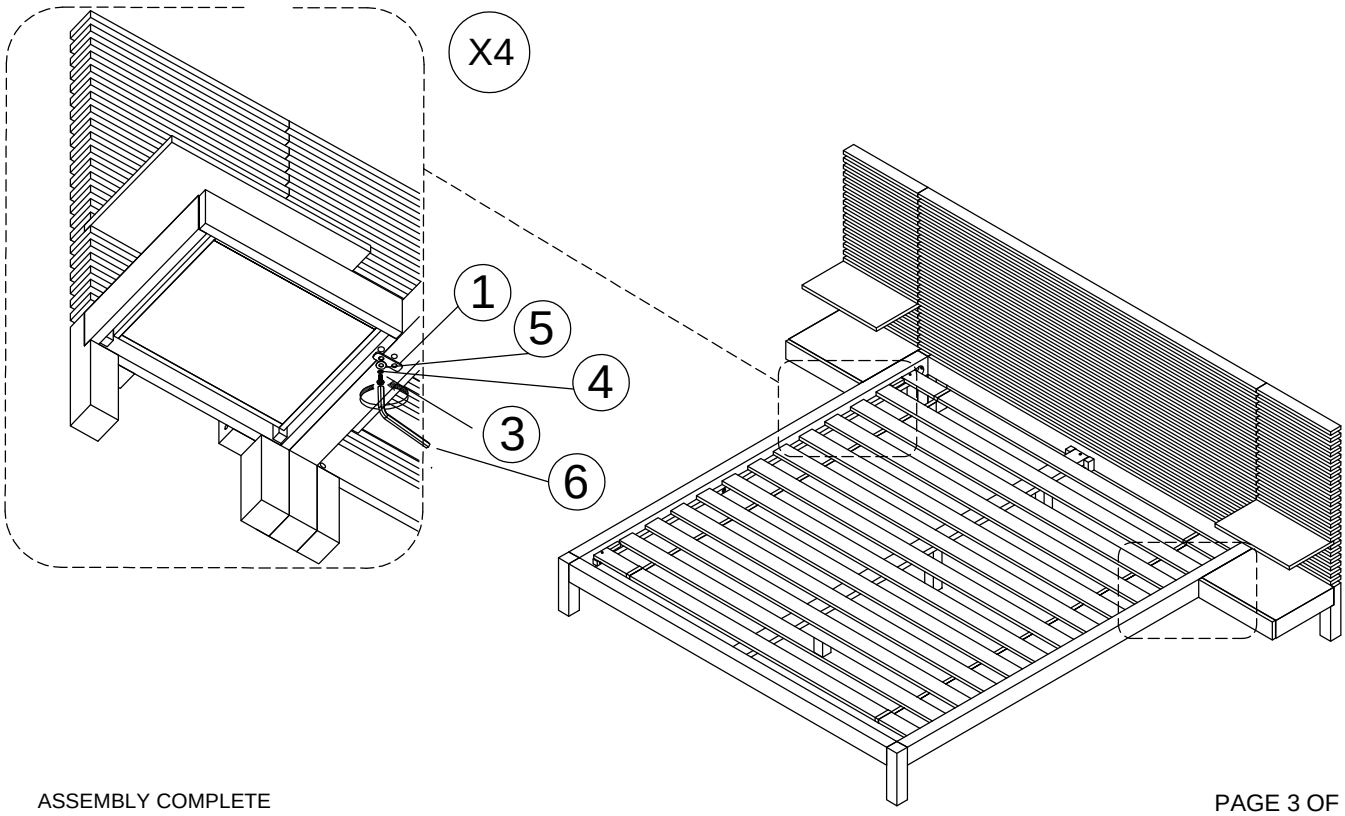

ASSEMBLY COMPLETE