KINGSTON

TO ORDER PARTS, CALL: 1-877-252-7277
www.kingstonbrass.com

KS1571,2,3,5,6,8BLBS

Single Handle 8" Centerset Kitchen Faucet with Brass Sprayer

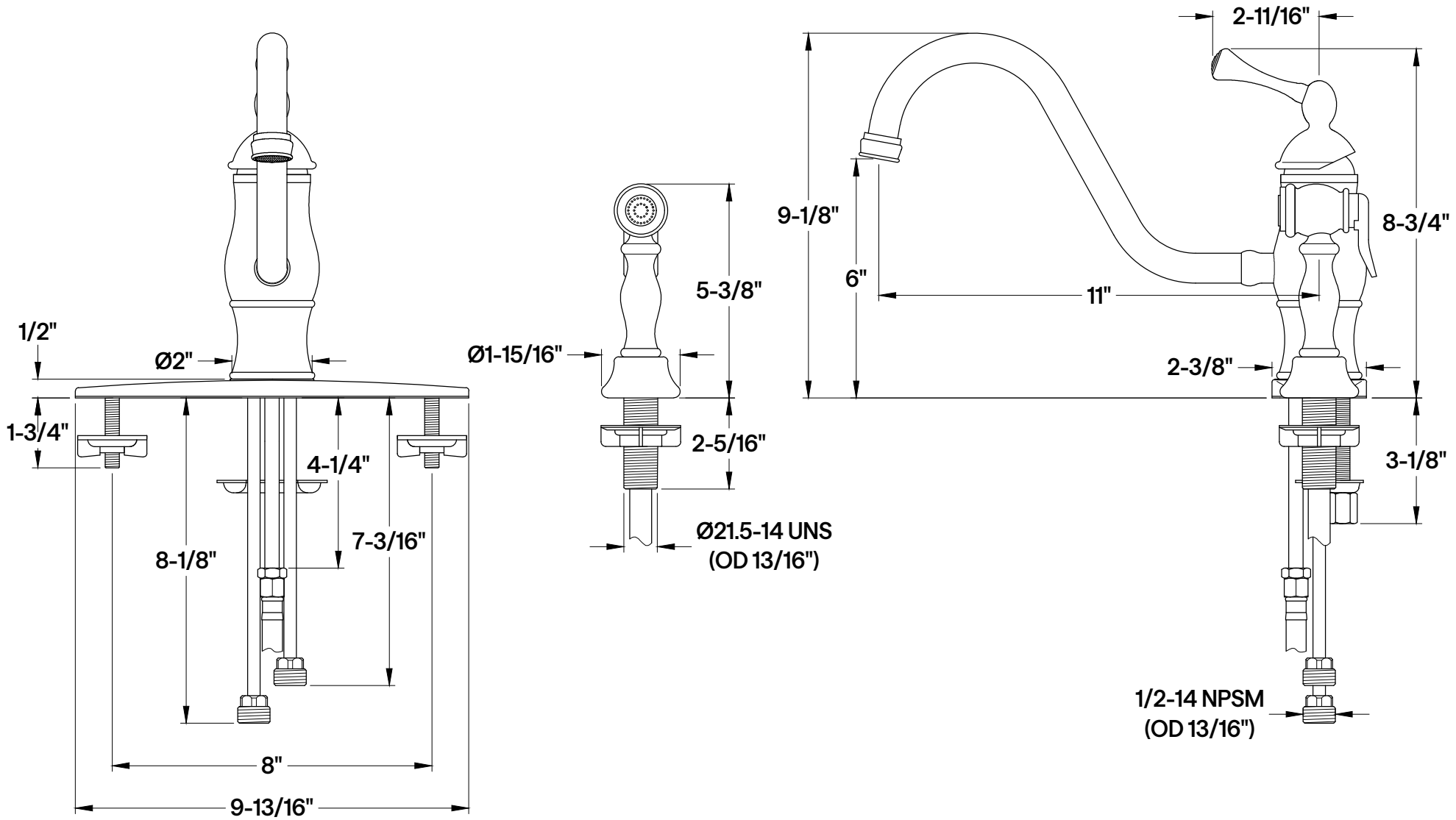

2025-09-B