CATALOG	DESCRIPTION
HJU6AB	JACK, HJU6A, CAT6A, UNI, BL
HJU6ABK	JACK, HJU6A, CAT6A, UNI, BK
HJU6ABN	JACK, HJU6A, CAT6A, UNI, BN
HJU6AEI	JACK, HJU6A, CAT6A, UNI, EI
HJU6AGL	JACK, HJU6A, CAT6A, UNI, GL
HJU6AGN	JACK, HJU6A, CAT6A, UNI, GN
HJU6AGY	JACK, HJU6A, CAT6A, UNI, GY
HJU6AOR	JACK, HJU6A, CAT6A, UNI, OR
HJU6AOW	JACK, HJU6A, CAT6A, UNI, OW
HJU6AP	JACK, HJU6A, CAT6A, UNI, PU
HJU6APK	JACK, HJU6A, CAT6A, UNI, PK
HJU6AR	JACK, HJU6A, CAT6A, UNI, RD
HJU6AW	JACK, HJU6A, CAT6A, UNI, WH
HJU6AY	JACK, HJU6A, CAT6A, UNI, YL
HJU6AB24	JACK, HJU6A, CAT6A, UNI, BL, 24PK
HJU6ABK24	JACK, HJU6A, CAT6A, UNI, BK, 24PK
HJU6ABN24	JACK, HJU6A, CAT6A, UNI, BN, 24PK
HJU6AEI24	JACK, HJU6A, CAT6A, UNI, EI, 24PK
HJU6AGL24	JACK, HJU6A, CAT6A, UNI, GL, 24PK
HJU6AGN24	JACK, HJU6A, CAT6A, UNI, GN, 24PK
HJU6AGY24	JACK, HJU6A, CAT6A, UNI, GY, 24PK
HJU6AOR24	JACK, HJU6A, CAT6A, UNI, OR, 24PK
HJU6AOW24	JACK, HJU6A, CAT6A, UNI, OW, 24PK
HJU6AP24	JACK, HJU6A, CAT6A, UNI, PU, 24PK
HJU6APK24	JACK, HJU6A, CAT6A, UNI, PK, 24PK
HJU6AR24	JACK, HJU6A, CAT6A, UNI, RD, 24PK
HJU6AW24	JACK, HJU6A, CAT6A, UNI, WH, 24PK
HJU6AY24	JACK, HJU6A, CAT6A, UNI, YL, 24PK
HJWM24	HJU6A JACK WIRE MANAGER, 24 PACK

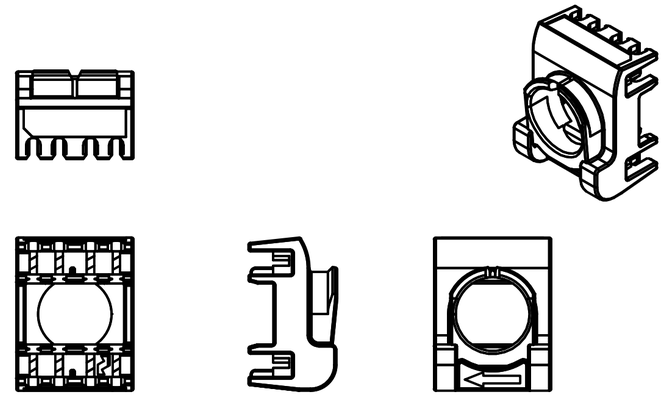

WIRE MANAGER

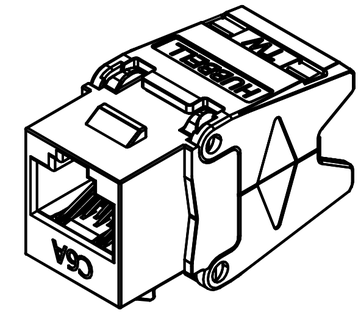

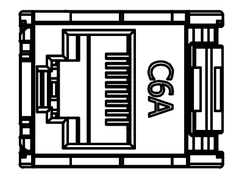

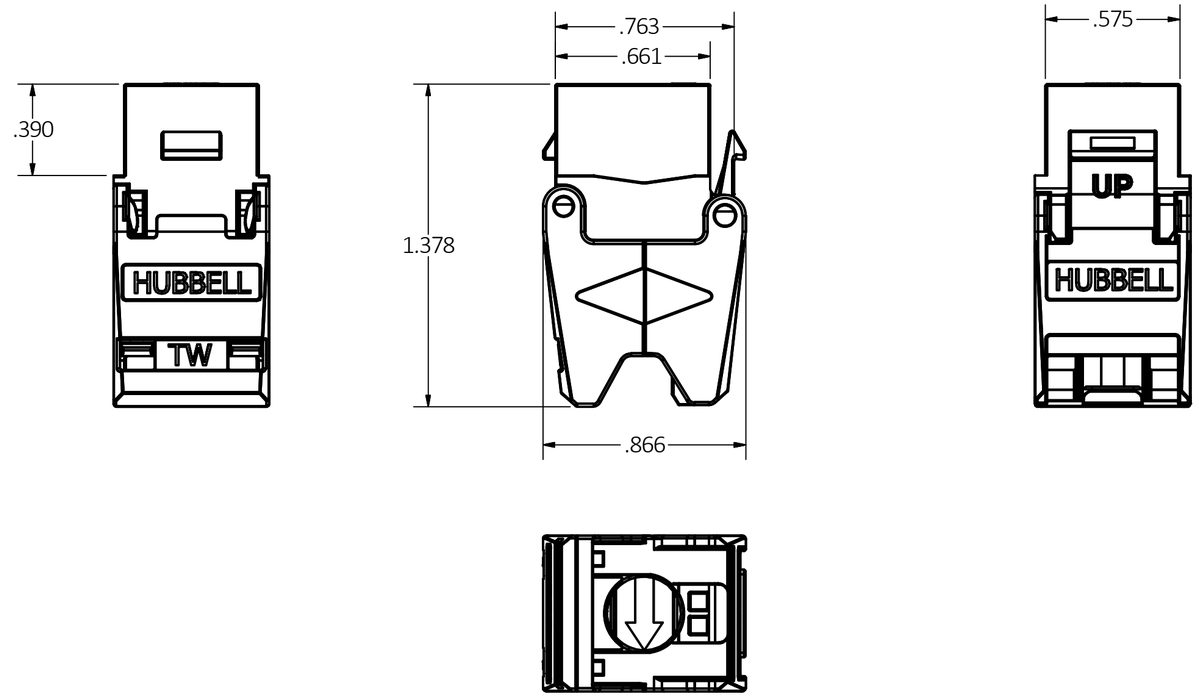

NOTES:

1. COMPLIES WITH TIA 568.2-D AND
   ISO/IEC 60603-7-51 CATEGORY 6A STANDARDS.
   PLUG INSERTION/EXTRACTION 750 CYCLES MINIMUM.
   CONDUCTOR RANGE 22 AWG TO 24 AWG

2. MATERIALS:
   NOSE HOUSING: U/L 94 RATED THERMOPLASTIC
   REAR HOUSINGS: ZINC-ALLOY
   CONTACTS: COPPER ALLOY, GOLD PLATED

3. SPECIFICATIONS SUBJECT TO CHANGE WITHOUT NOTICE.

REV.	ECN	DATE	DESCRIPTION	CHG BY	APPD BY
1	23835	8/15/19	INITIAL RELEASE	DPO	MMA

Created on INVENTOR

DIMENSIONING AND TOLERANCE
PER ANSI Y14.5M-1982
UNLESS OTHERWISE SPECIFIED,
DIMENSIONS ARE IN INCHES (MM).
TOLERANCES.XX = ±.01 (.25)
.XXX = ±.005 (.127)
.XXXX = ±.0025 (.0635)
ANGLE TOL ±1°

IN ACCEPTING OUR DRAWINGS, BLUEPRINTS, OR SUPPORTING DOCUMENTATION FOR QUOTATION OR OTHER PURPOSES, YOU AGREE NOT TO DISCLOSE TO OTHERS THE IDEAS, INFORMATION, OR DESIGNS SHOWN HEREIN, AND THAT YOU WILL MAKE NO USE OF SAME WITHOUT PERMISSION

PROJECT REFERENCE: NPD-02962

MATERIAL: SEE NOTES

DRAWN BY: D.O'CONNOR 8/15/19

CHECKED BY:

APPROVED BY:

Hubbell Premise Wiring
HUBBELL INCORPORATED (Delaware)
23 CLARA DRIVE, SUITE 103 MYSTIC, CT 06355

TITLE: HJU6A CATEGORY 6A JACK

SIZE: C | DRAWING NO. HWS14889C | REV. 1

SCALE: | SHEET 1 OF 1