Parts:

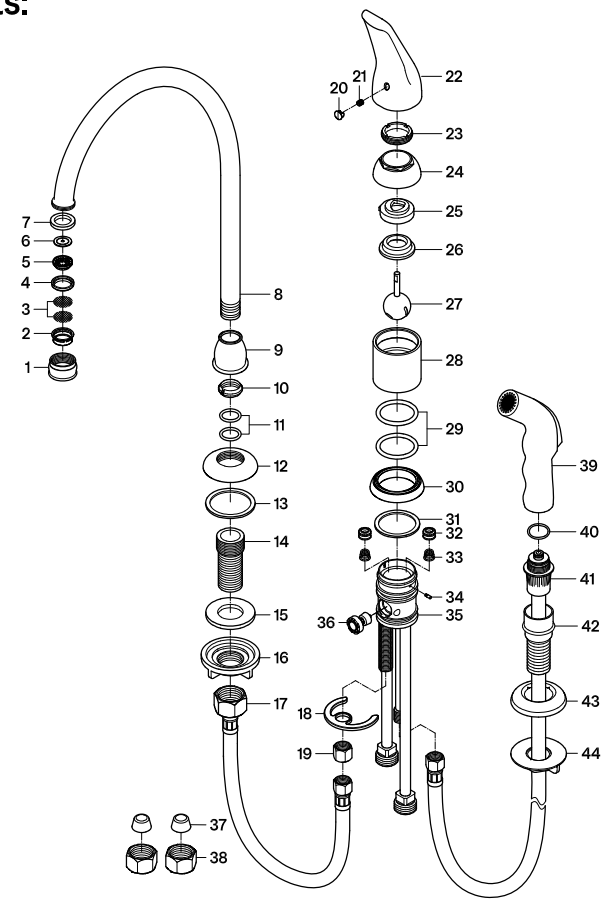

Replacement Parts:

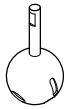

Cartridge: KBRP521C



Handle: KBH5710

KINGSTON

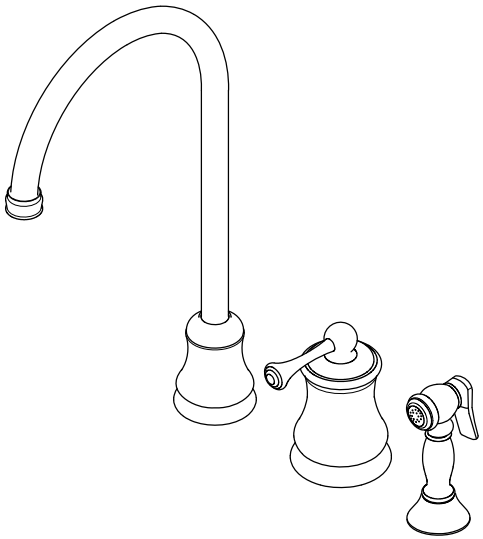

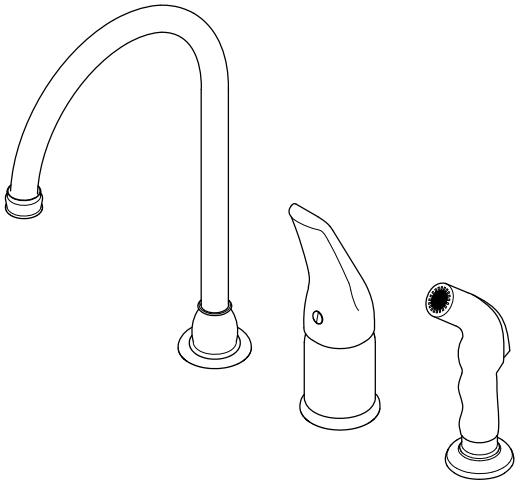

CARE AND MAINTENANCE OF YOUR FAUCET

Your KINGSTON faucet has been finished to the most strict standards; however, due to the high content of minerals in the water, your finish may appear dull and tarnished after time. These are some do's and don'ts to maintain the luster on your faucet for many years to come.

DO
1. Use a silicon based caulking when installing.
2. Clean your faucet with only a mild soap and water solution.
3. Dry your faucet after using it.
4. Give it a coat of Carnauba Wax periodically.

DON'T
1. Use plumbers putty when installing the faucet.
2. Use any abrasive cleaning agents.

It may seem like a very simple and short list but it is that simple to maintain your faucet, looking shiny and new.

If your faucet is already looking somewhat dull and tarnished, before replacing it, try cleaning it with a 50/50 solution of vinegar and water, you may need to soak some rags and wrap around those stubborn areas, leave
overnight and rinse completely in the morning, apply Carnauba wax once you have removed the mineral deposits.

Parts:

Washer & Lock Nut	Cone Washer & Coupling Nut	Metal Washer & Brass Nut
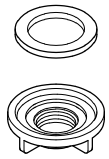	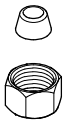	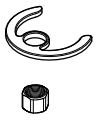
1 Pc	2 Pcs	1 Pc

www.kingstonbrass.com

TOLL-FREE CUSTOMER SERVICE: 1-877-2-KBRASS
TECHNICAL SUPPORT E-mail: service@kingstonbrass.com
12775 Reservoir Street, Chino, CA 91710

NOTICE

Failure to follow all directions may cause leaks which may result in water damage

KINGSTON

INSTALLATION INSTRUCTIONS
Widespread Single Handle Kitchen Faucet

BEFORE BEGINNING INSTALLATION:

1. Flush plumbing lines to clear any debris.
2. Shut off both supply lines after flushing.

Need Tools:

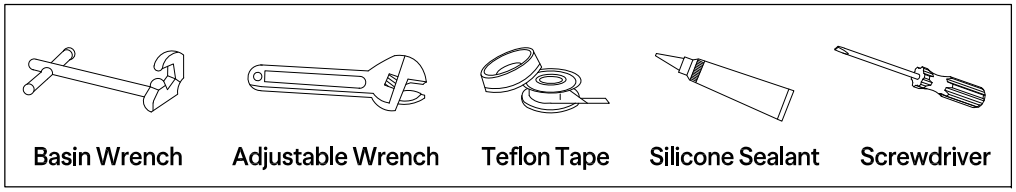

1

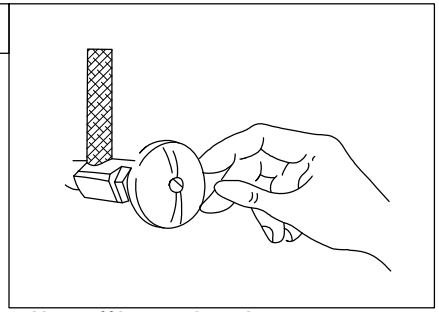

1. Shut off hot and cold water supply under sink. Plug sink drain with cloth to avoid losing small parts.
Remove old faucet.

2

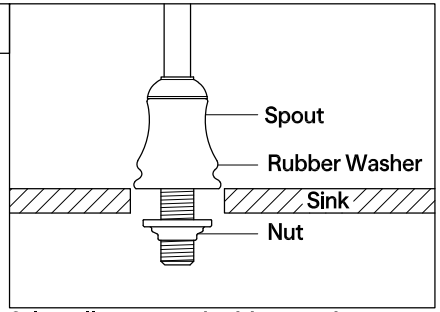

2. Install spout and rubber washer through sink. Be sure to keep rubber washer above the sink surface. Attach nut to spout and hand tightens from underneath sink. Be careful not to over tighten.

3

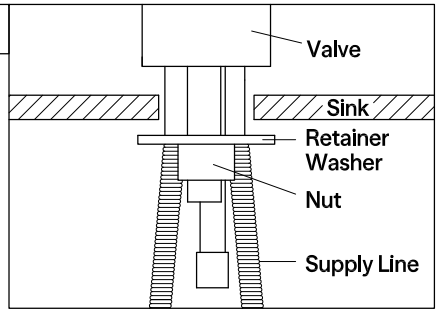

3. Install Valve. Insert valve through sink. Position valve so that the longer supply line is on the left side. Place retainer washer over the threaded stem and thread nut into place. Tighten nut using adjustable wrench. Be sure to keep rubber washer above the sink surface.

4

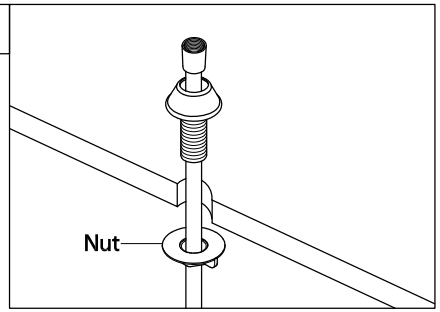

4. Install sprayer: Insert hose guide through guide flange and snap into place. Install guide through sink and attach with mounting nut.

Warning!!!

- Do not over-tighten nut during installation.
- Over-tighten may crack the valve and cause severe leak.

5

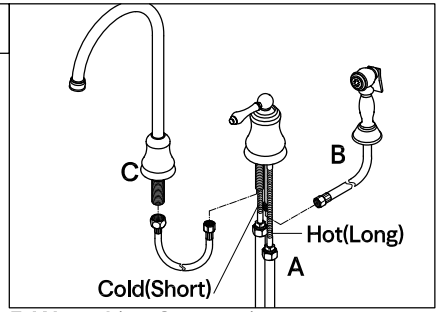

5. Water Line Connections
A. Connect hot and cold water supply line to faucet.
B. Connect sprayer hose to the partially threaded inlet stem on the faucet valve.
C. Connect small end of metal braided hose to the faucet valve. Connect other end of hose to the spout.
Tighten all connections securely with a wrench.
Be careful not to over tighten.

CAUTION: If faucet supply lines need to be bent, grip tubes at point of bending and slowly pull tube into position. Extreme care must be exercised. Kinked tubes will void the warranty.

6

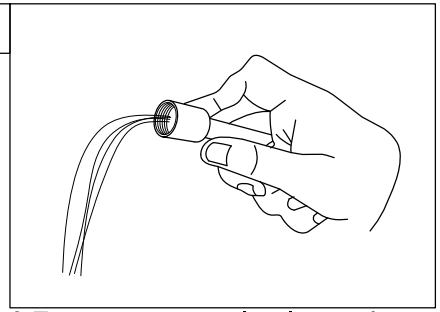

6. Turn on water supply valves and open handles to flush sprayer hose for at least one minute, this will help clear any debris left in the line.

NOTE 1: If additional adapters or supply tubes are required, you can purchase them from the store where you bought the faucet.
NOTE 2: Adapter parts are not included in the package.

7

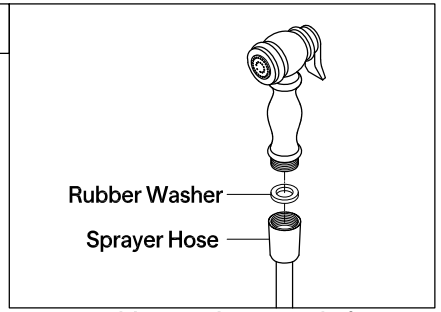

7. Place rubber washer to end of spray hose and attach sprayer.

8

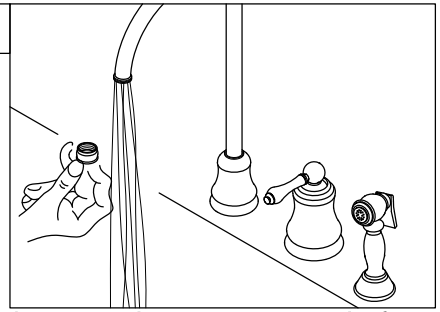

8. Remove the aerator, turn on the faucet, let water run for at least one minute, this will clear any debris left in the line, reinstall aerator.

©2025 LVC Kingston LLC. All Rights Reserved.
2025-05-D