KINGSTON

TO ORDER PARTS, CALL: 1-877-252-7277
www.kingstonbrass.com

KB6140,1,2,3,7,8AX

Single Handle Pressure Balanced Tub & Shower Faucet

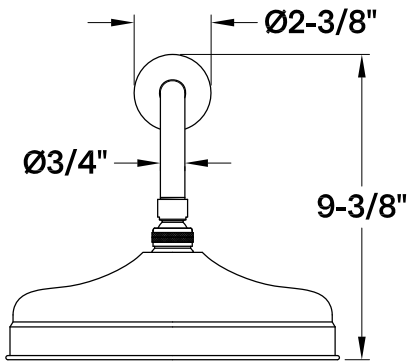

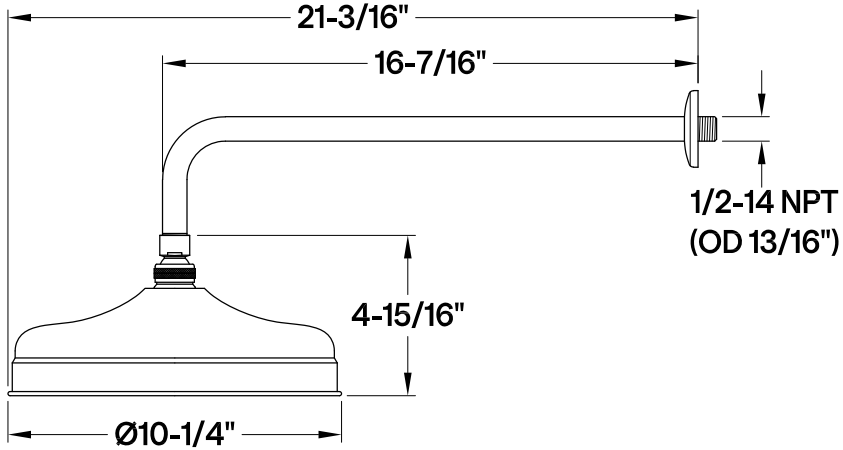

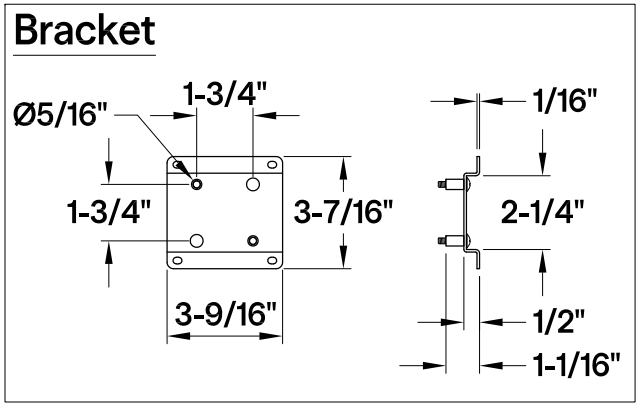

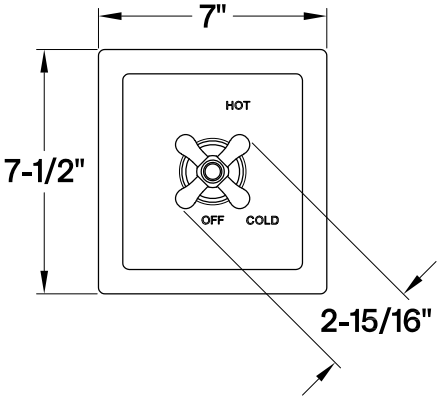

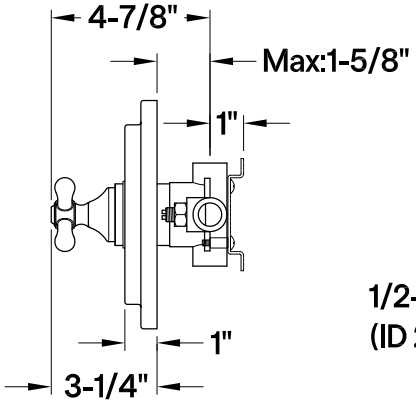

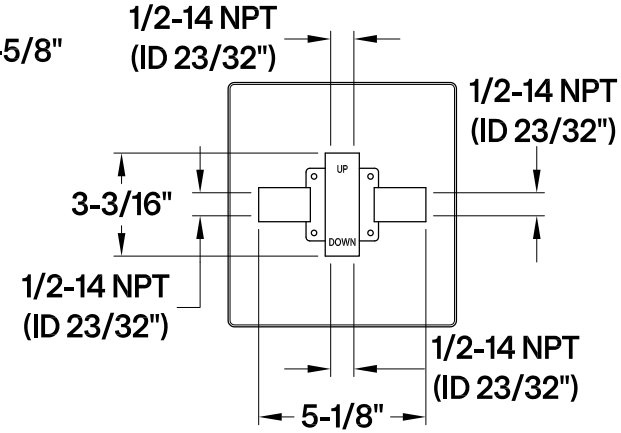

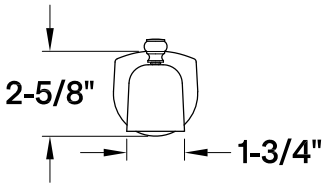

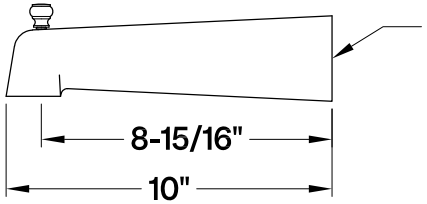

2026-06-C