amalfi

ASSEMBLY INSTRUCTIONS

OTTO MARBLE & IRON COFFEE TABLE

ITEM NO: F5100033

PARTS

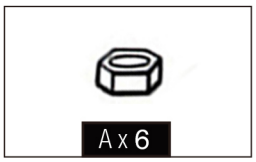

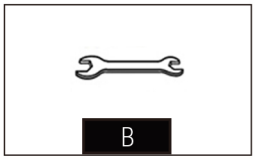

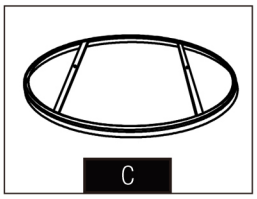

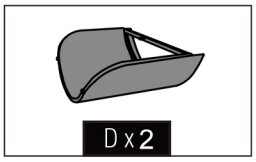

STEP 1

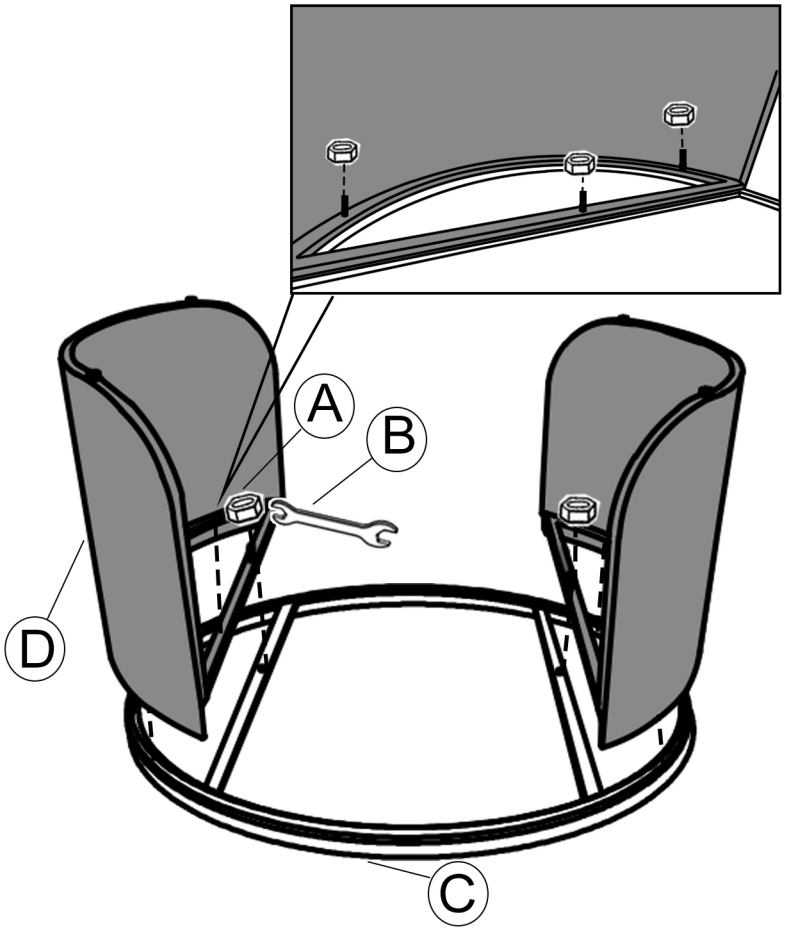

FINAL

