ASSEMBLY INSTRUCTION

4-DRAWER CHEST

A Top Panel

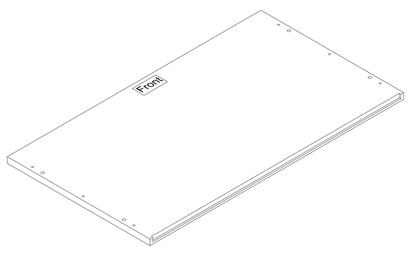

1pc

B Left Side Panel

1pc

C Right Side Panel

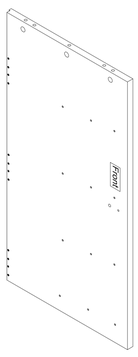

1pc

D Bottom Frame

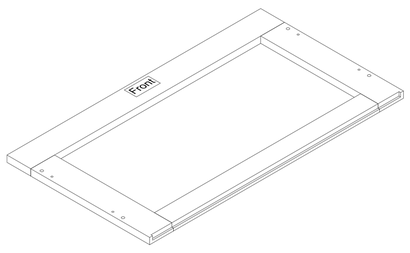

1pc

E Back Plywood

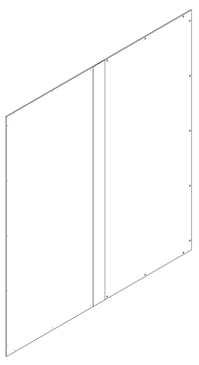

1pc

F Post

4pcs

G Center Bar

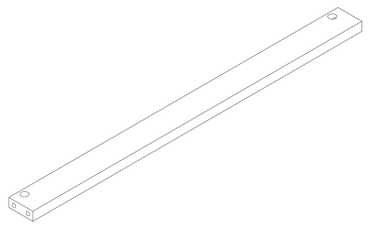

1pc

H Drawer Front

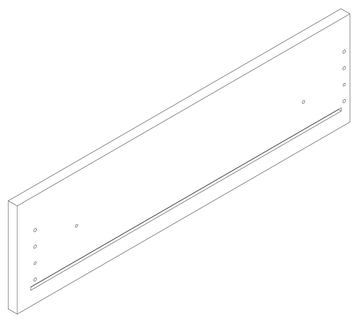

1pc

I Left Drawer Side

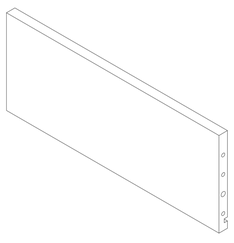

4pcs

J Right Drawer Side

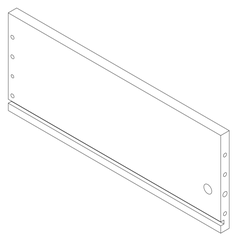

4pcs

K Drawer Back

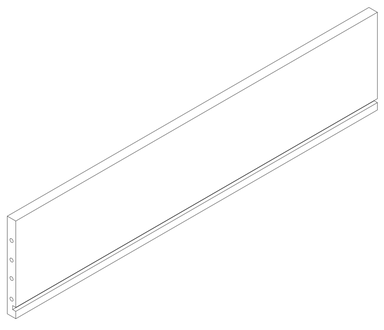

4pcs

L Drawer Base

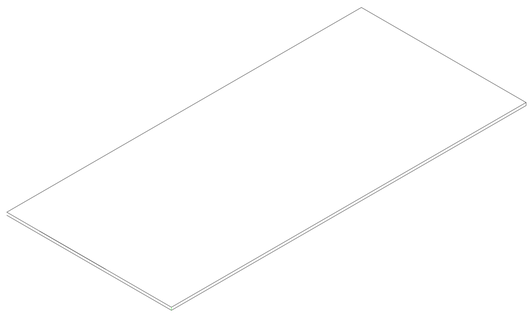

4pcs

M Back Panel

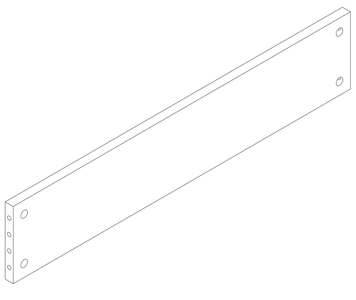

3pcs

N Screw
M3 x 16mm

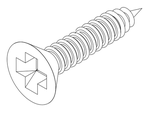

48pcs

O Panhead Screw
M4 x 22mm

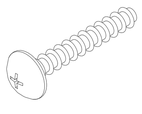

8pcs

P Dowel
M8 x 35mm

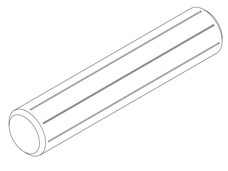

10pcs

Q Dowel
M6 x 30mm

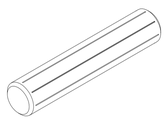

48pcs

R Cam Lock
15 x 12mm

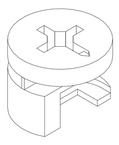

36pcs

S Cam Bolt
5 x 25mm

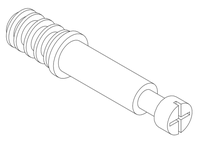

36pcs

T Runner
250mm

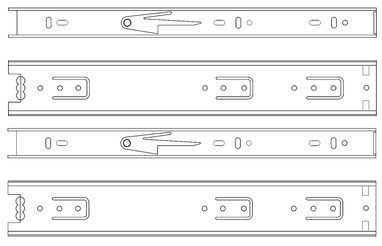

4sets

U Cam Lock Cover
17 x 5mm

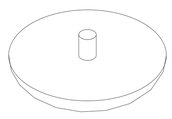

36pcs

V Panhead Screw
M4 x 16mm-Black

22pcs

W Screw
M4 x 38mm

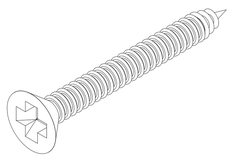

4pcs

X Handle

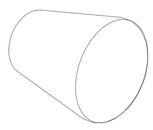

8pcs

Y Anti-Tipping Kit

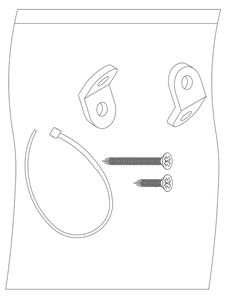

1set

These pages list all the contents included in the box. Please take the time to identify the hardware as well as the individual components to this product. As you unpack and prepare for assembly, place the contents on a carpeted or padded area to protect them from damage.

1 Attach Cam Bolt (S) to Top Panel (A).

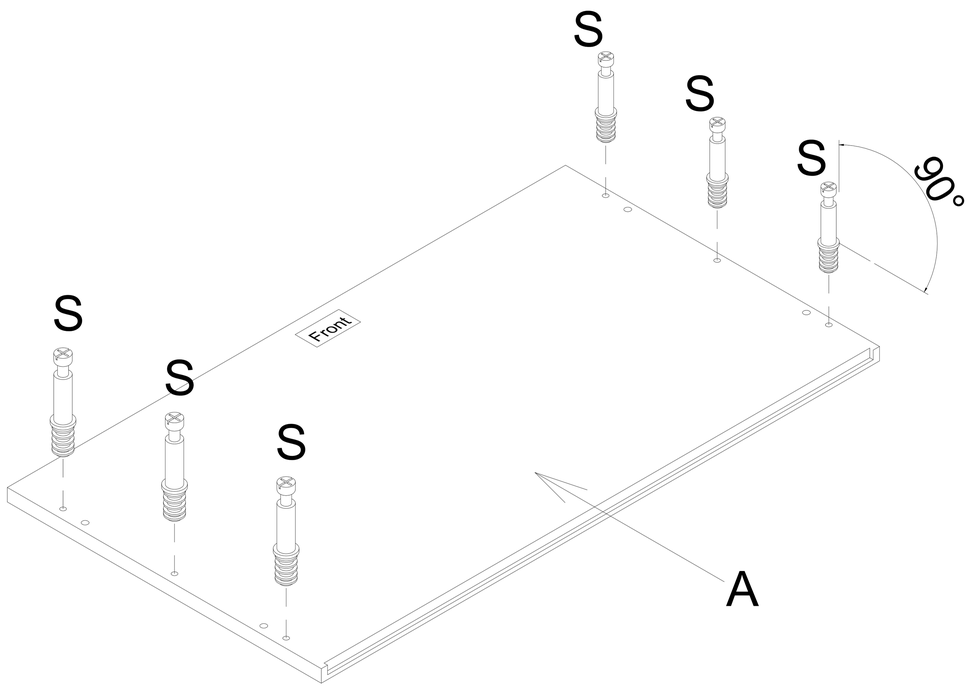

2 Attach Dowel (P), Cam Lock (R) and Cam Bolt (S) to Left & Right Side Panel (B & C).

NOTE : - Make sure arrows on each Cam Lock (R) points towards nearest edge with holes.

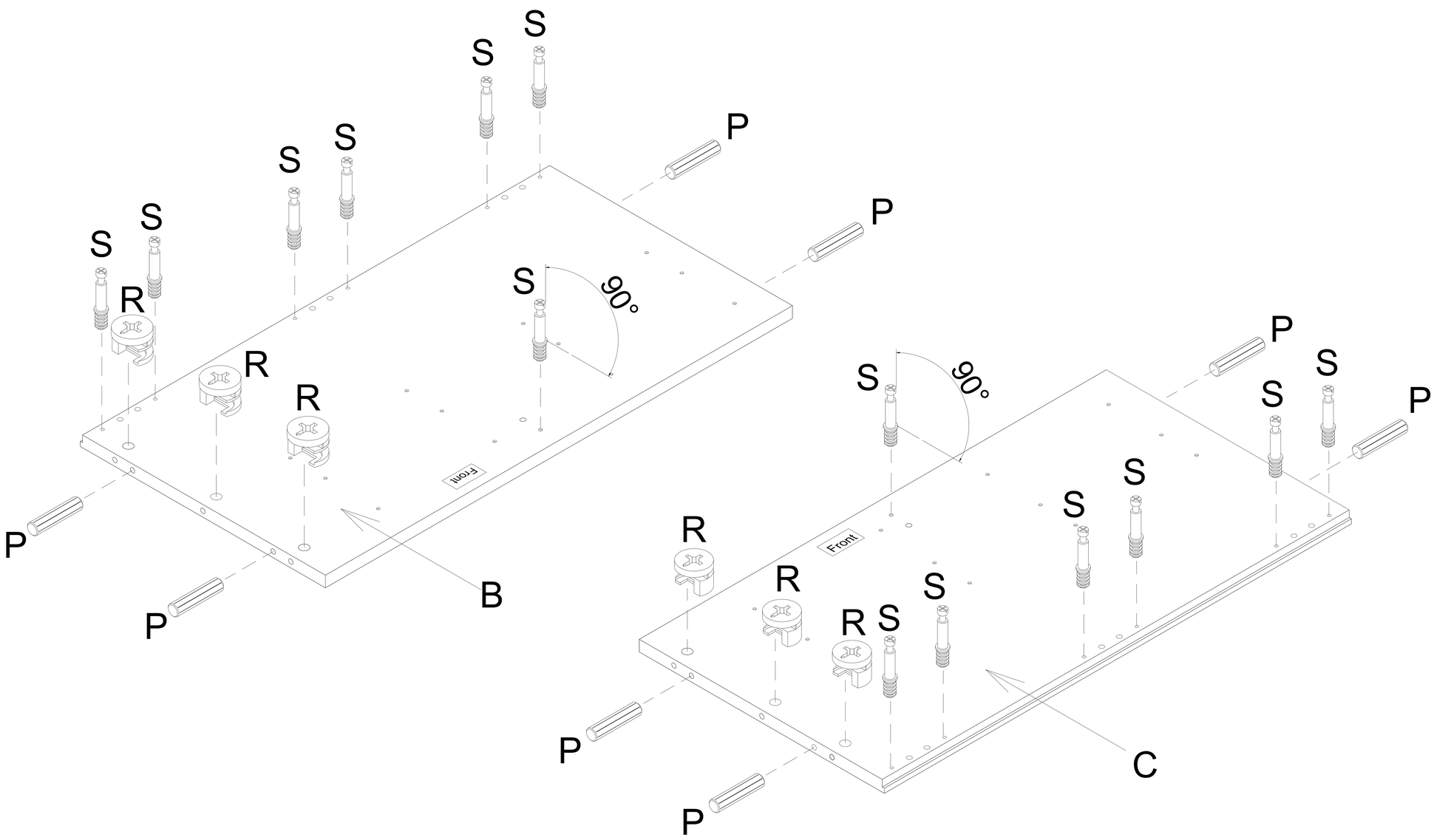

3 Attach Runner (T) to Left & Right Side Panel (B & C) and secure with Screw (N).

NOTE : - Do not over tighten the Screw (N).
- Screw (N) should be assembled from the front of the runner. Start from N^1, N^2 then N^3.
- Make sure the Screw (N) are installed vertically without slant to ensure screw sits properly in the hole.

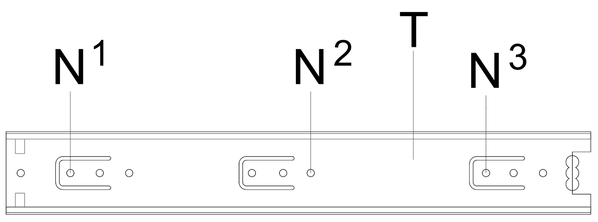

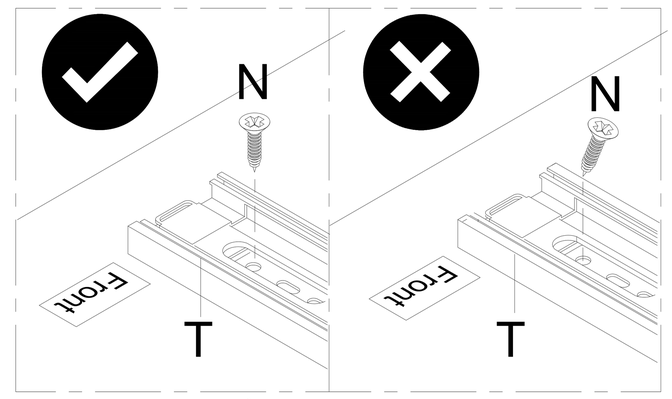

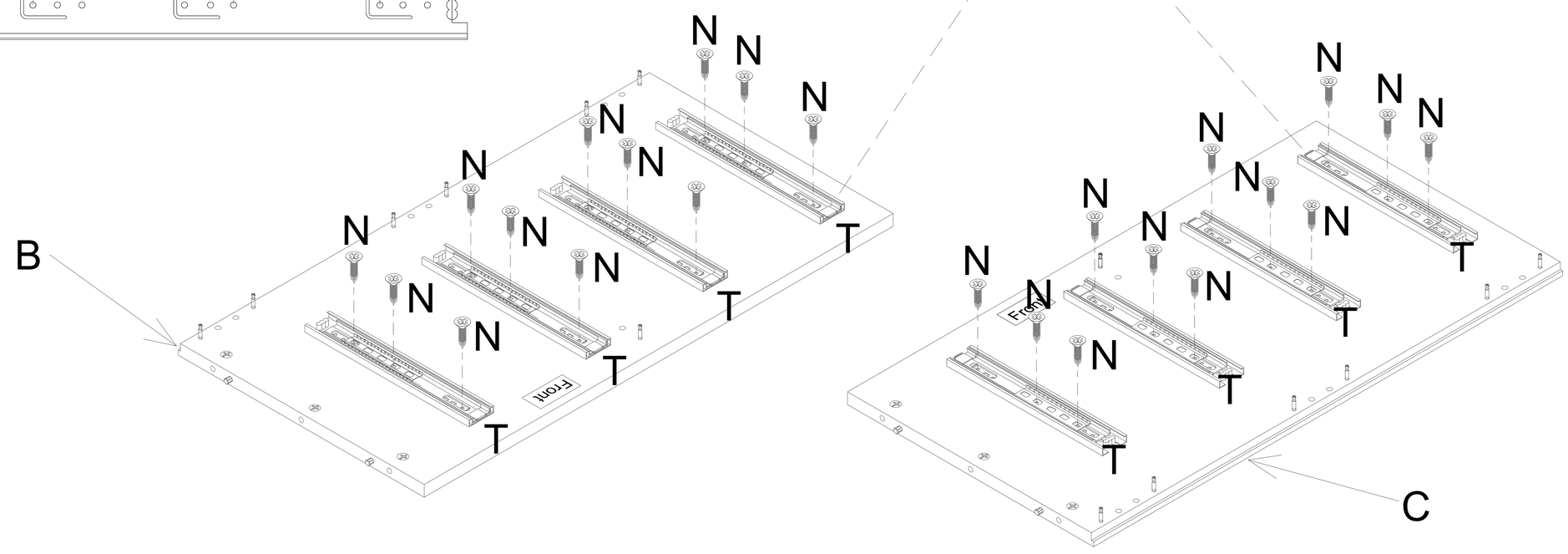

EXTENSION RUNNER DISASSEMBLY STEPS:

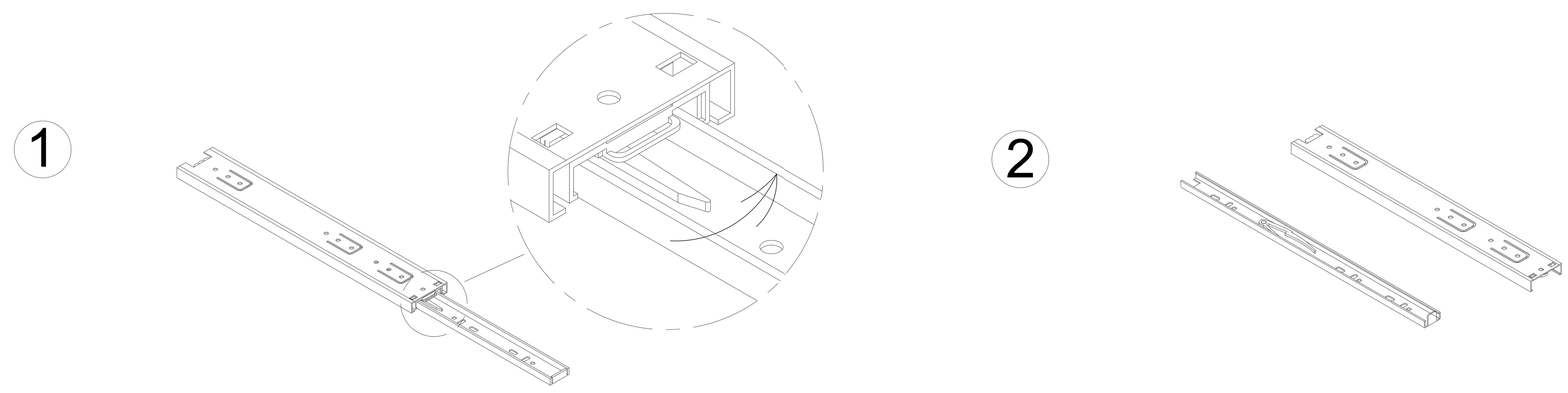

Disassemble the Runner (T) to 2 parts. Fix 1 part on the Left & Right Side Panel (B & C) and fix the other part on the Left & Right Drawer Side (I & J).

4 Attach Dowel (P) and Cam Lock (R) to Center Bar (G) and Back Panel (M).

NOTE : - Make sure arrows on each Cam Lock (R) points towards nearest edge with holes.

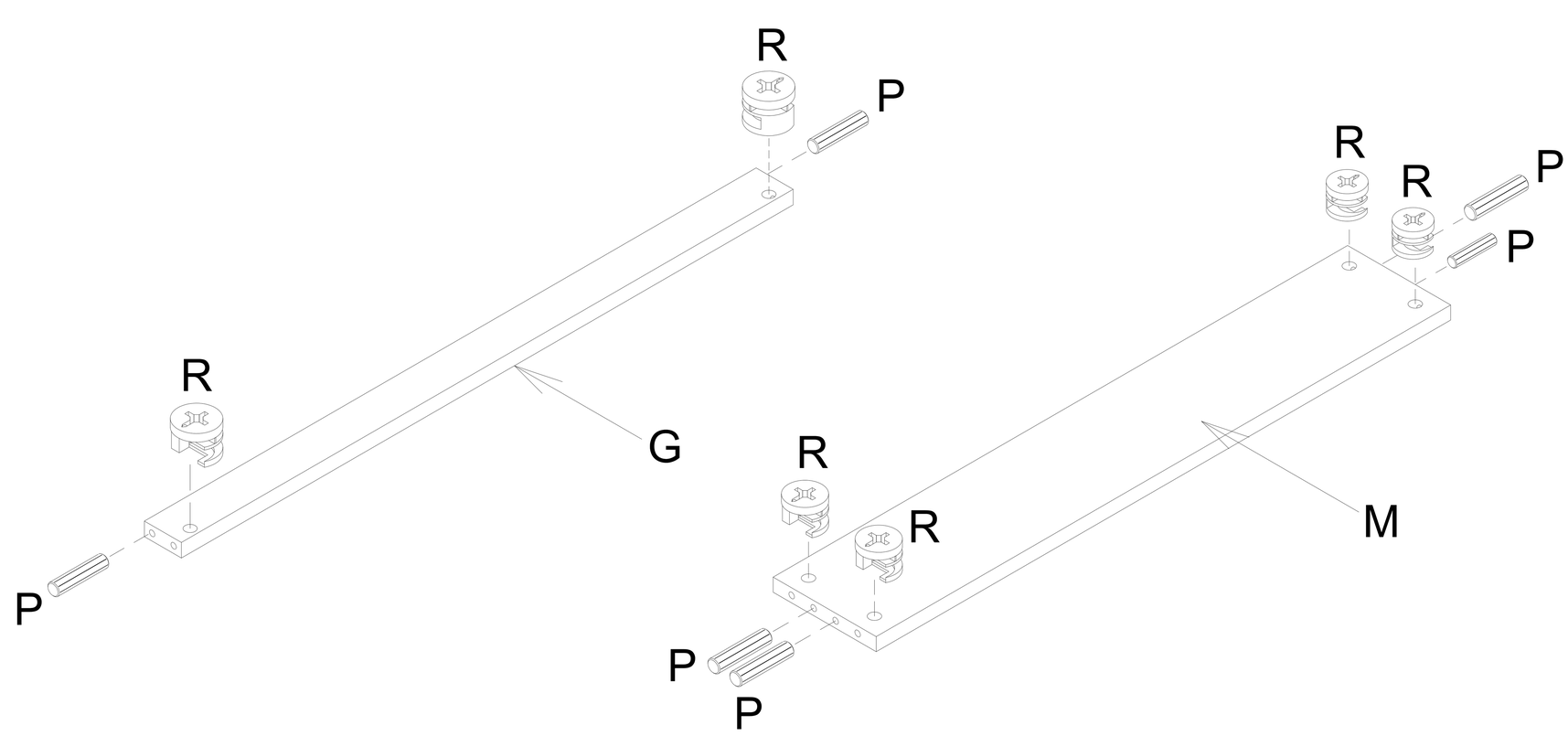

5 Attach Center Bar (G) and Back Panel (M) to Left & Right Side Panel (B & C) and secure with Cam Lock (R) attached in the Step 4. Cover Cam Lock (R) with Cam Lock Cover (U).

NOTE : - Do not over tighten the Cam Lock (R).

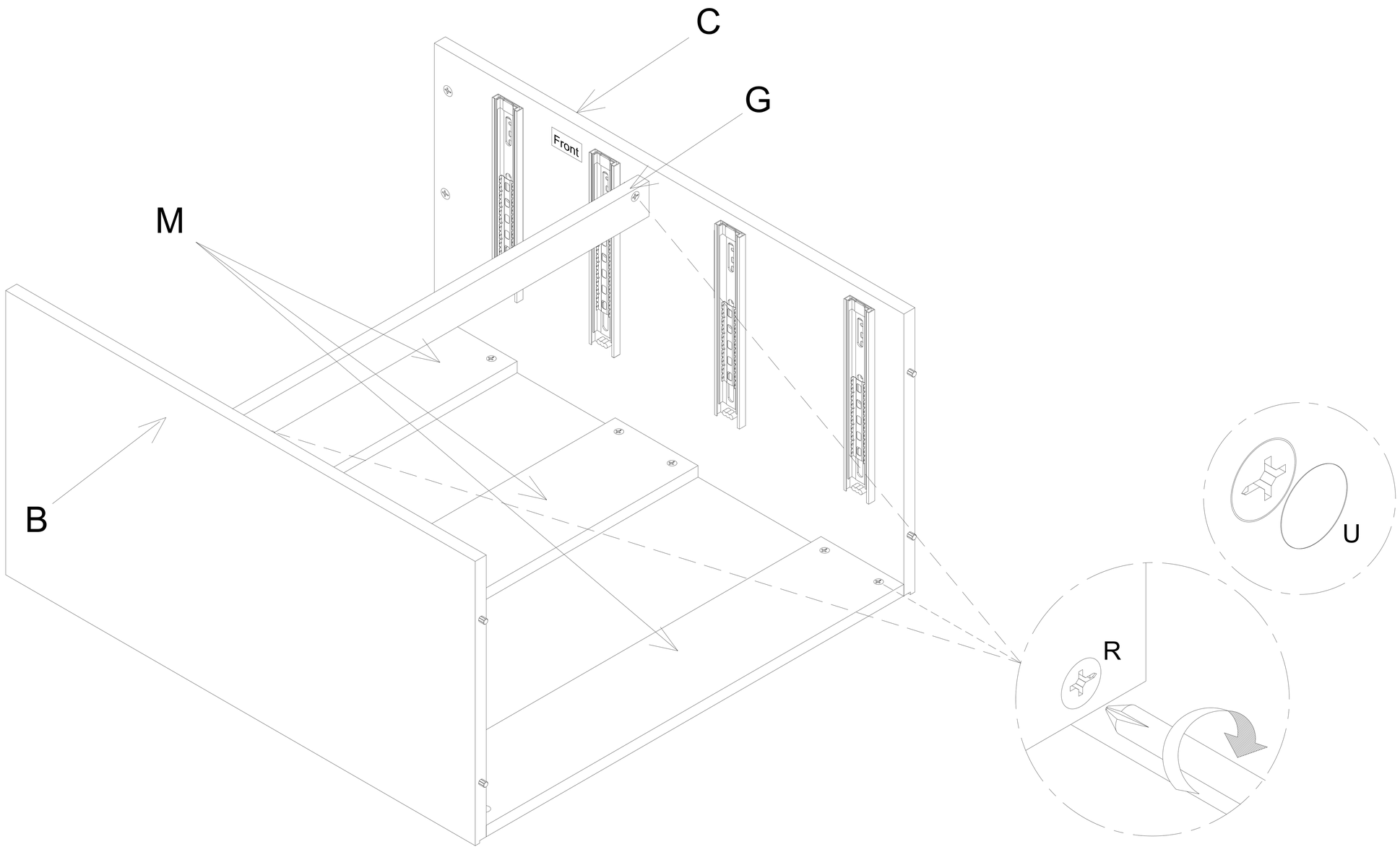

6 Turn over the assembled unit. Attach Bottom Frame (D) to Left & Right Side Panel (B & C) and secure with Screw (W).

NOTE : - Do not over tighten the Screw (W).

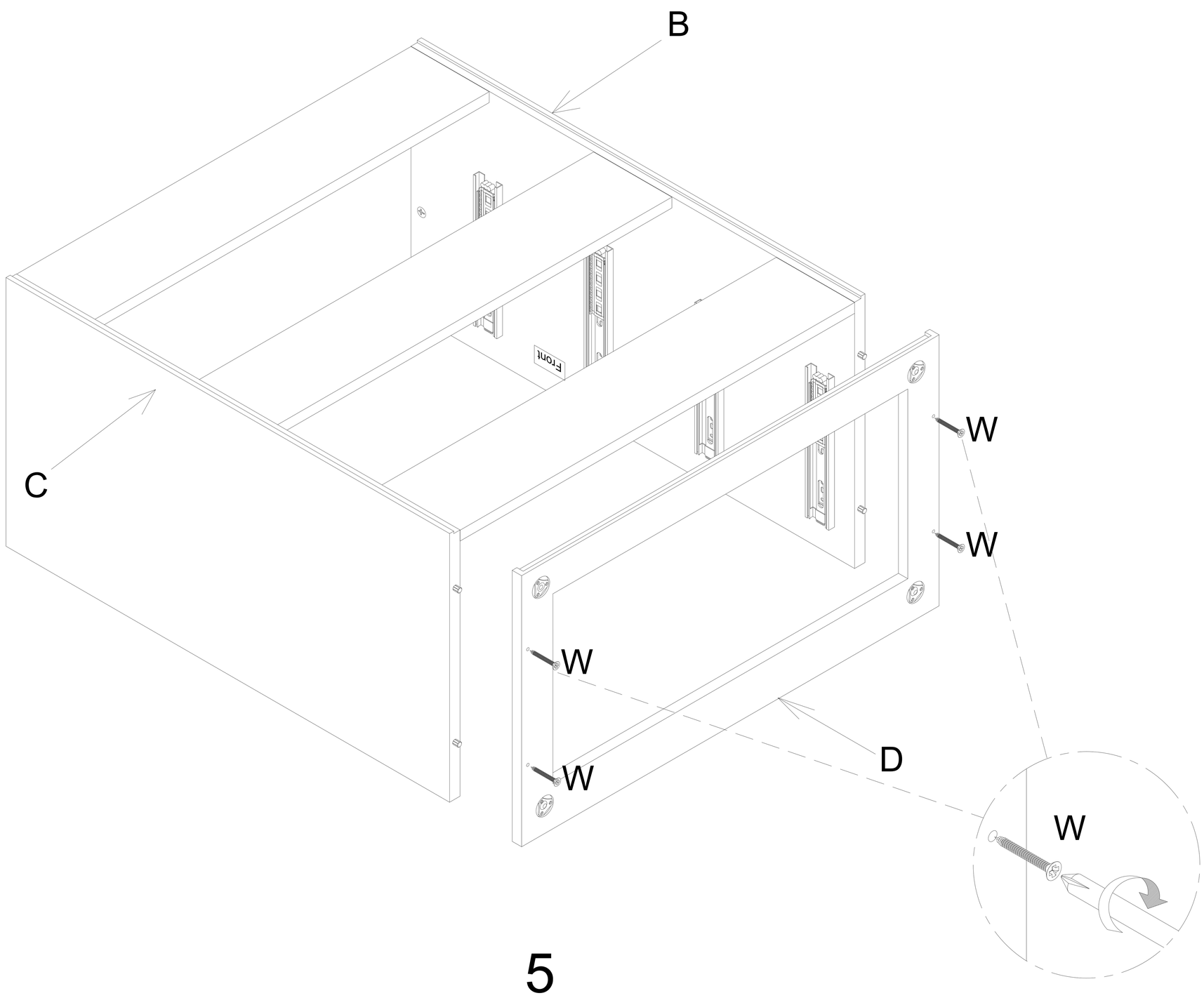

7 Attach Post (F) to Bottom Frame (D) and turn each clockwise until it securely engaged.

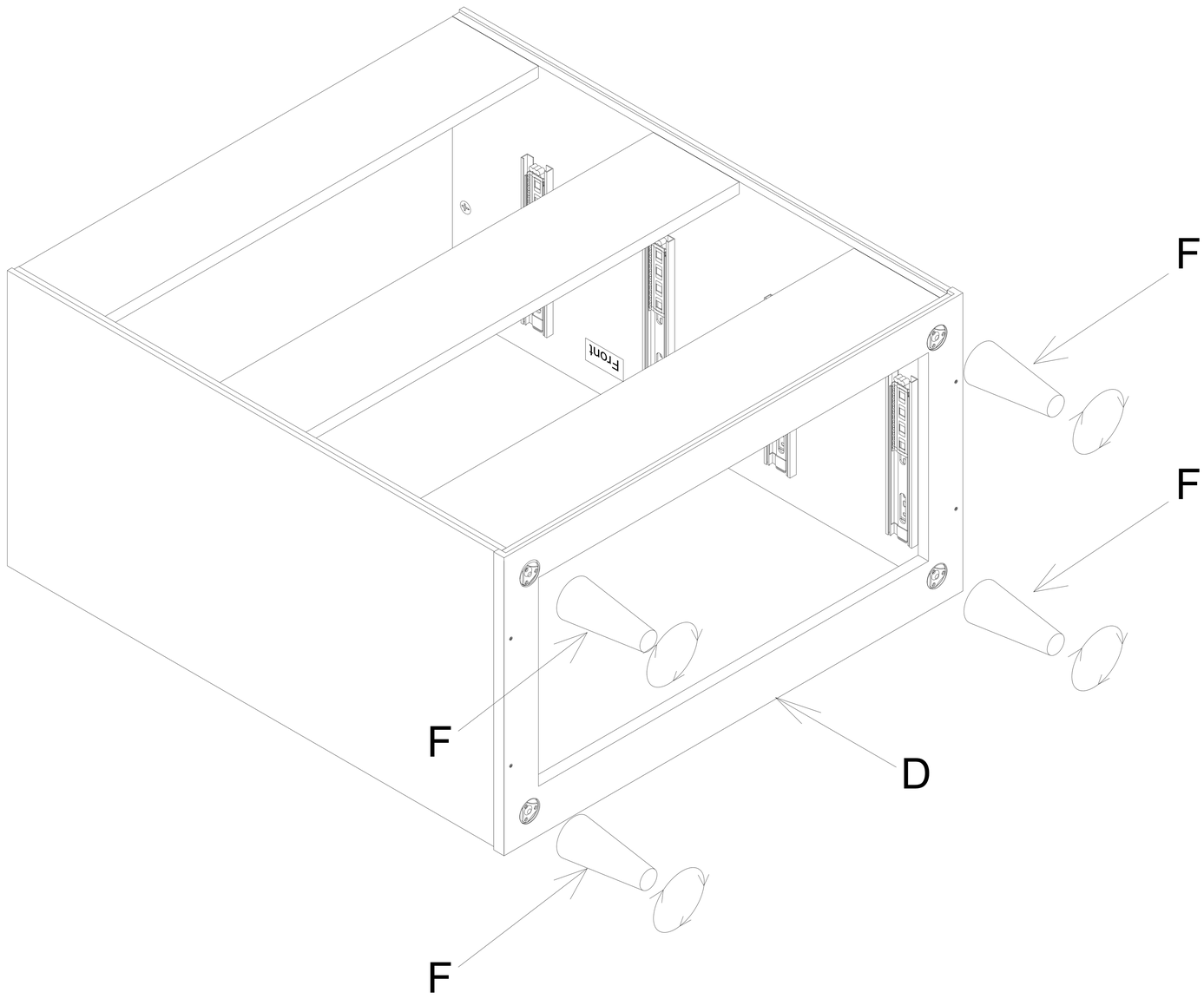

8 Attach Top Panel (A) to the assembled unit and secure with the Cam Lock (R) attached in Step 2. Cover Cam Lock (R) with Cam Lock Cover (U).

NOTE : - Do not over tighten the Cam Lock (R).

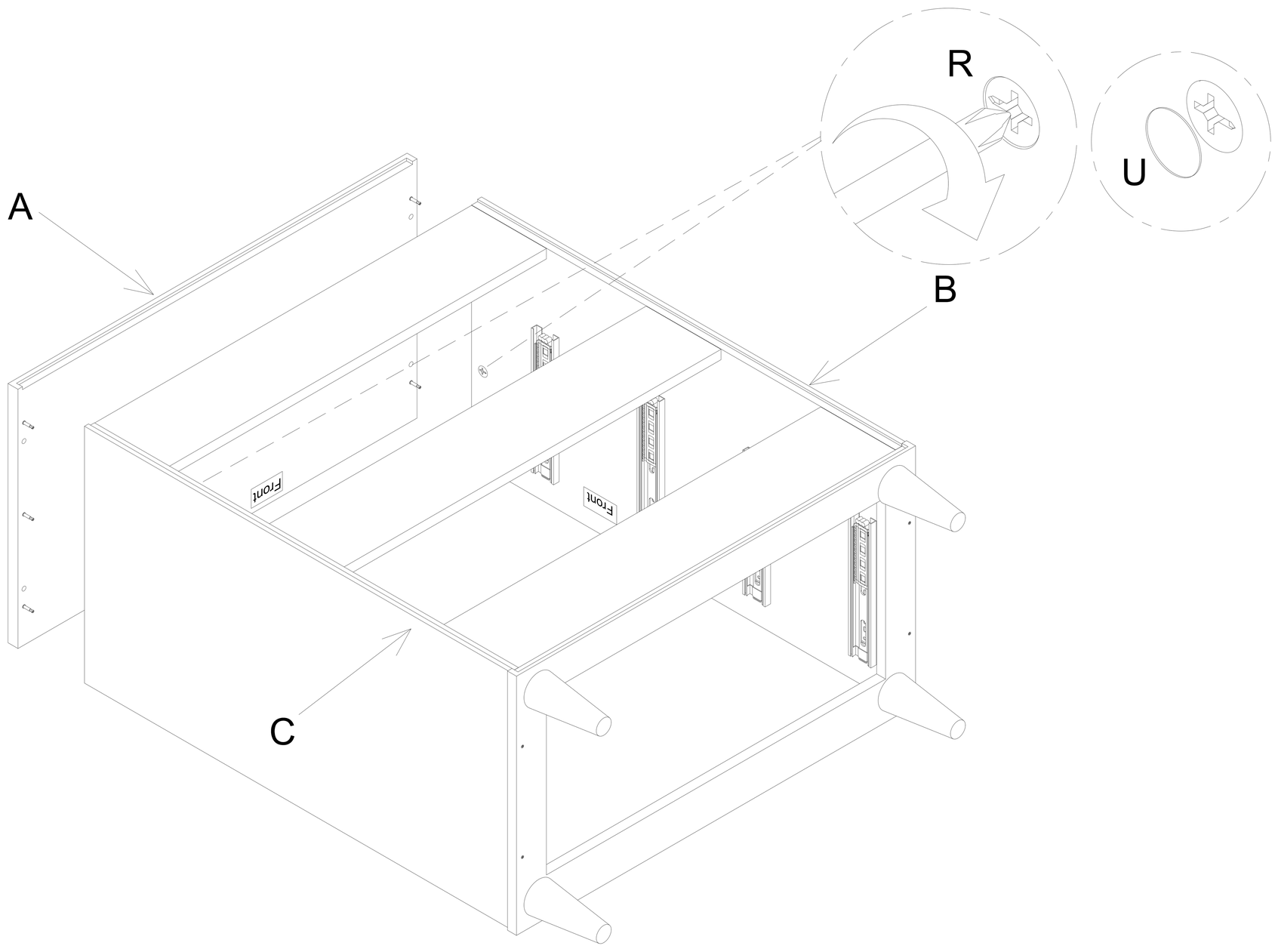

9 Attach Back Plywood (E) to the assembled unit and secure with Panhead Screw (V).

NOTE : - Do not over tighten the Screw (V).

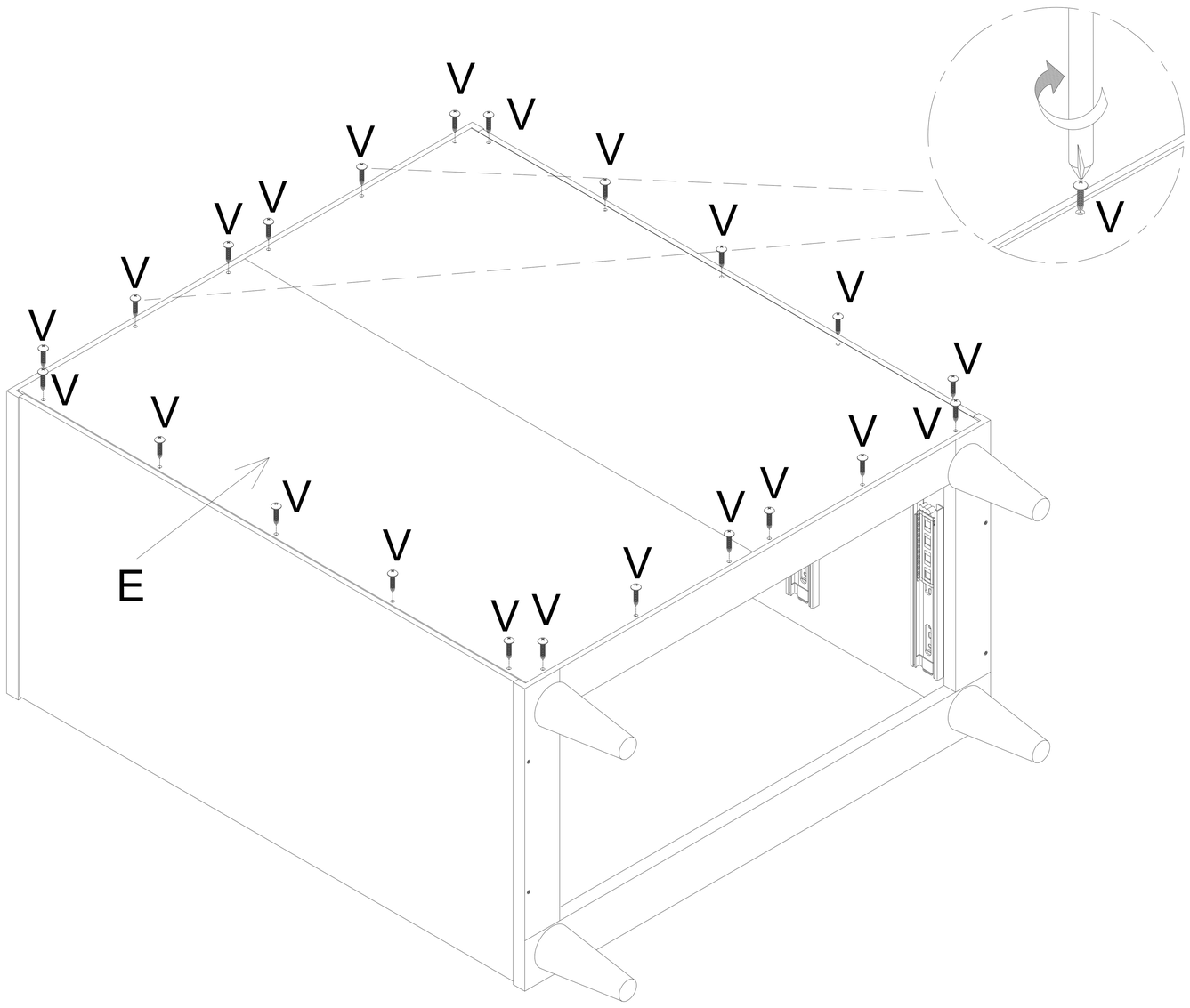

10 Attach Runner (T) to Left & Right Drawer Side (I & J) and secure with Screw (N).

NOTE : - Do not over tighten the Screw (N).

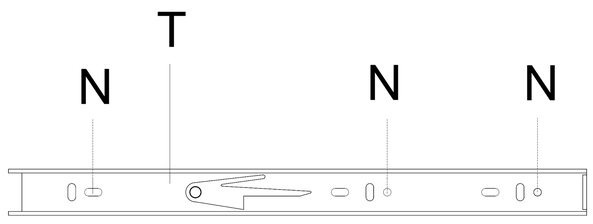

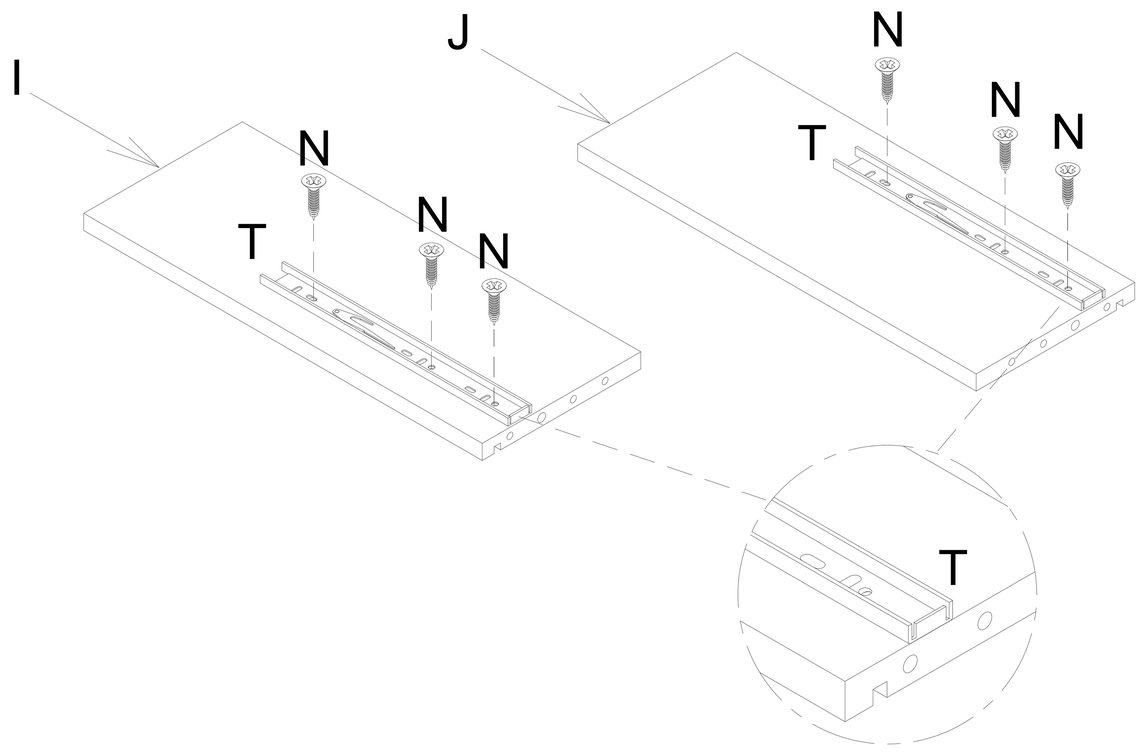

11 Attach Dowel (Q) and Cam Lock (R) to Left & Right Drawer Side (I & J) and Drawer Back (K). Attach Cam Bolt (S) to Drawer Front (H) and Left & Right Drawer Side (I & J).

NOTE : - Make sure arrows on each Cam Lock (R) points towards nearest edge with holes.

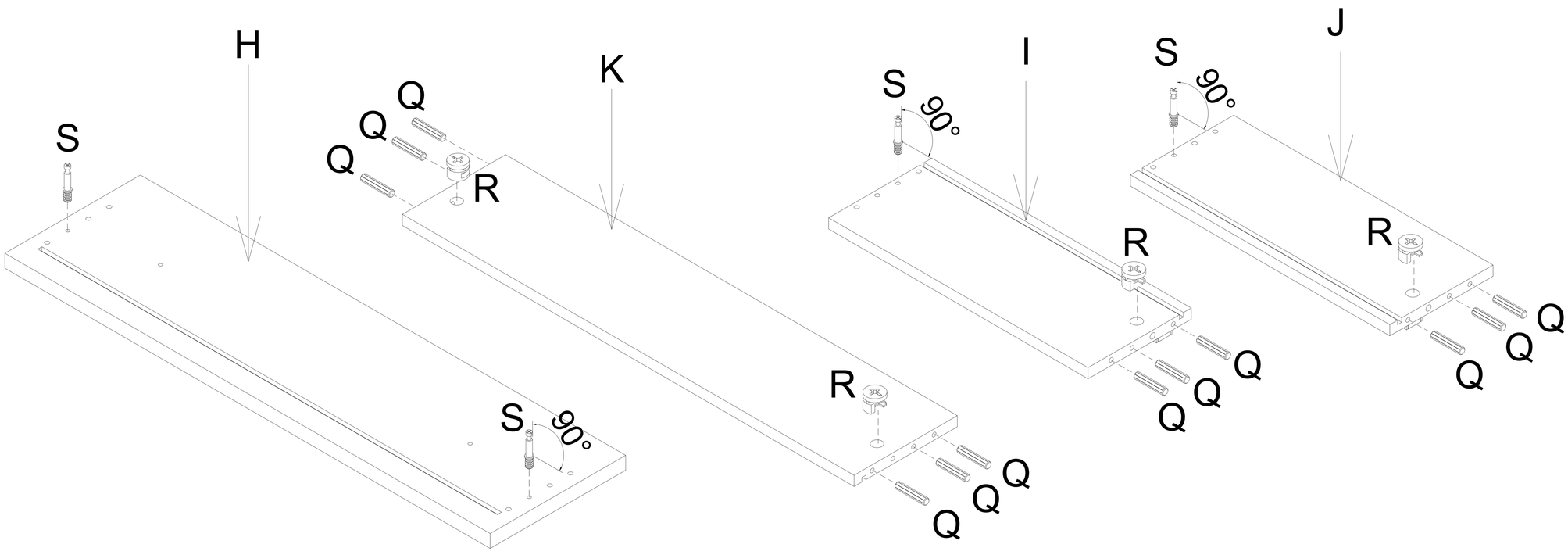

12 Attach Left & Right Drawer Side (I & J) to Drawer Back (K) and secure with the Cam Lock (R) attached in Step 11. Cover Cam Lock (R) with Cam Lock Cover (U).

NOTE : - Do not over tighten the Cam Lock (R).

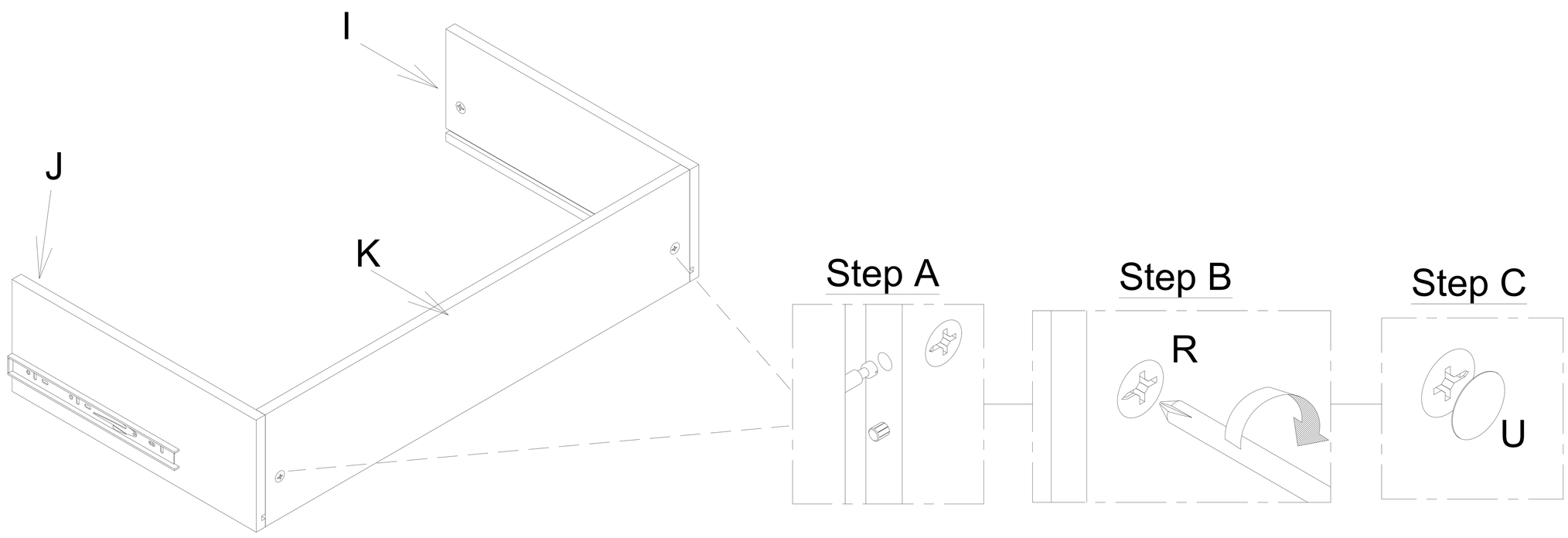

13 Slot the Drawer Base (L) into corresponding grooves. Attach Drawer Front (H) to Drawer Box and secure with the Cam Lock (R) attached in the Step 11. Cover Cam Lock (R) with Cam Lock Cover (U).

NOTE : - Do not over tighten the Cam Lock (R).

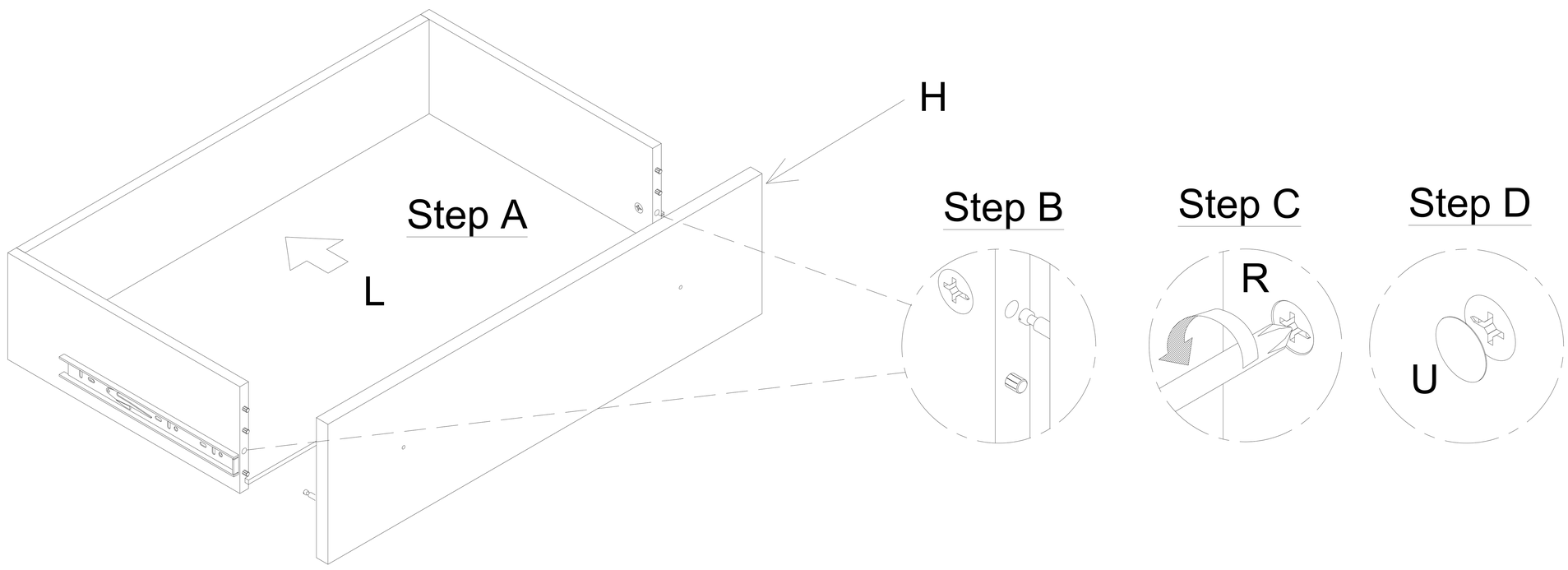

14 Attach Handle (X) to Drawer Front (H) and secure with Panhead Screw (O).

NOTE : - Do not over tighten the Panhead Screw (O).

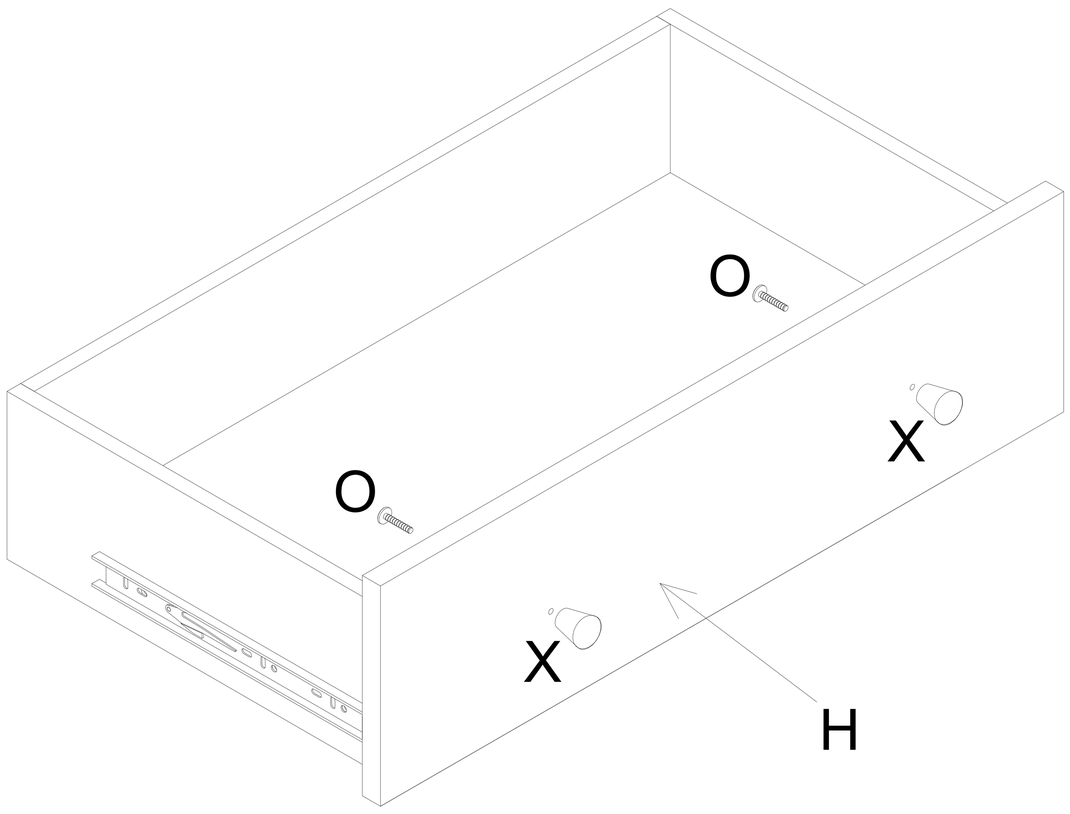

15 Slot the Drawers into the assembled unit.

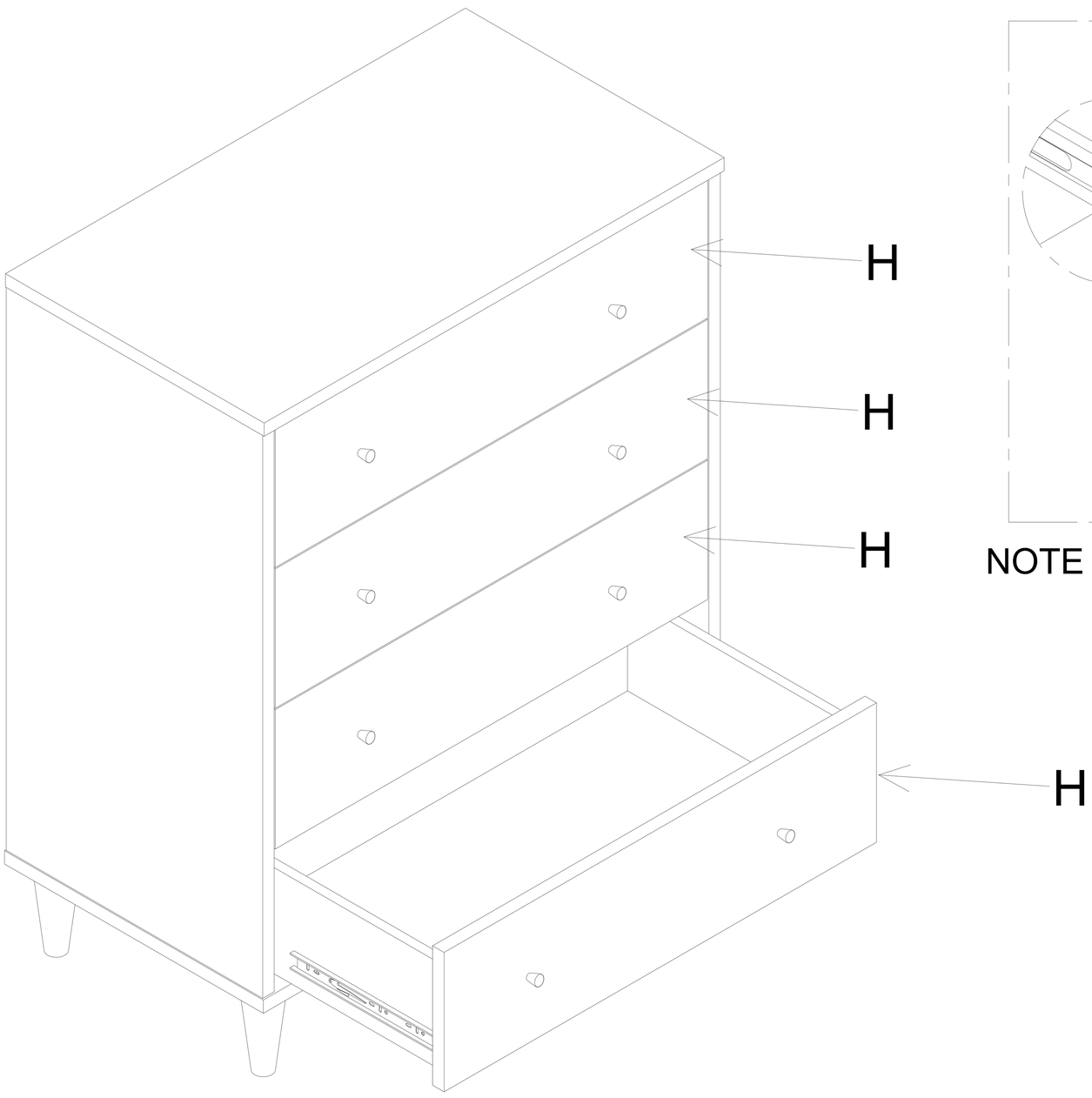

EXTENSION RUNNER ASSEMBLY STEP:

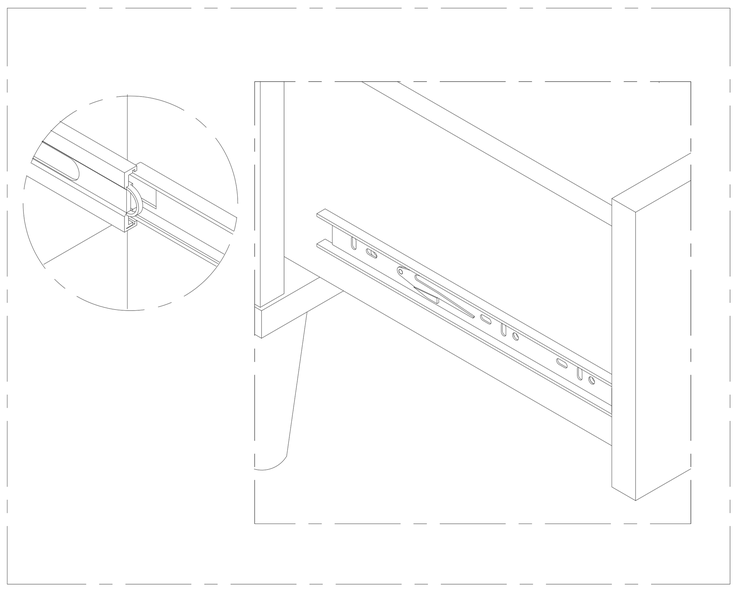

NOTE : Align and pull/push the triggers on both sides of drawer box into the metal track on interior side of side panel.

16 Attach Anti-Tipping Kit (Y) to wall. Attach Bracket (vertically) to wall using the Long Screw provided. Attach Bracket (vertically) to furniture back (directly below top) with Short Screw. Place Bracket as close to center of furniture back as possible in relation to wall stud and the desired position in the room. Move furniture to its final position. Thread the strap through Bracket and pull it tight.

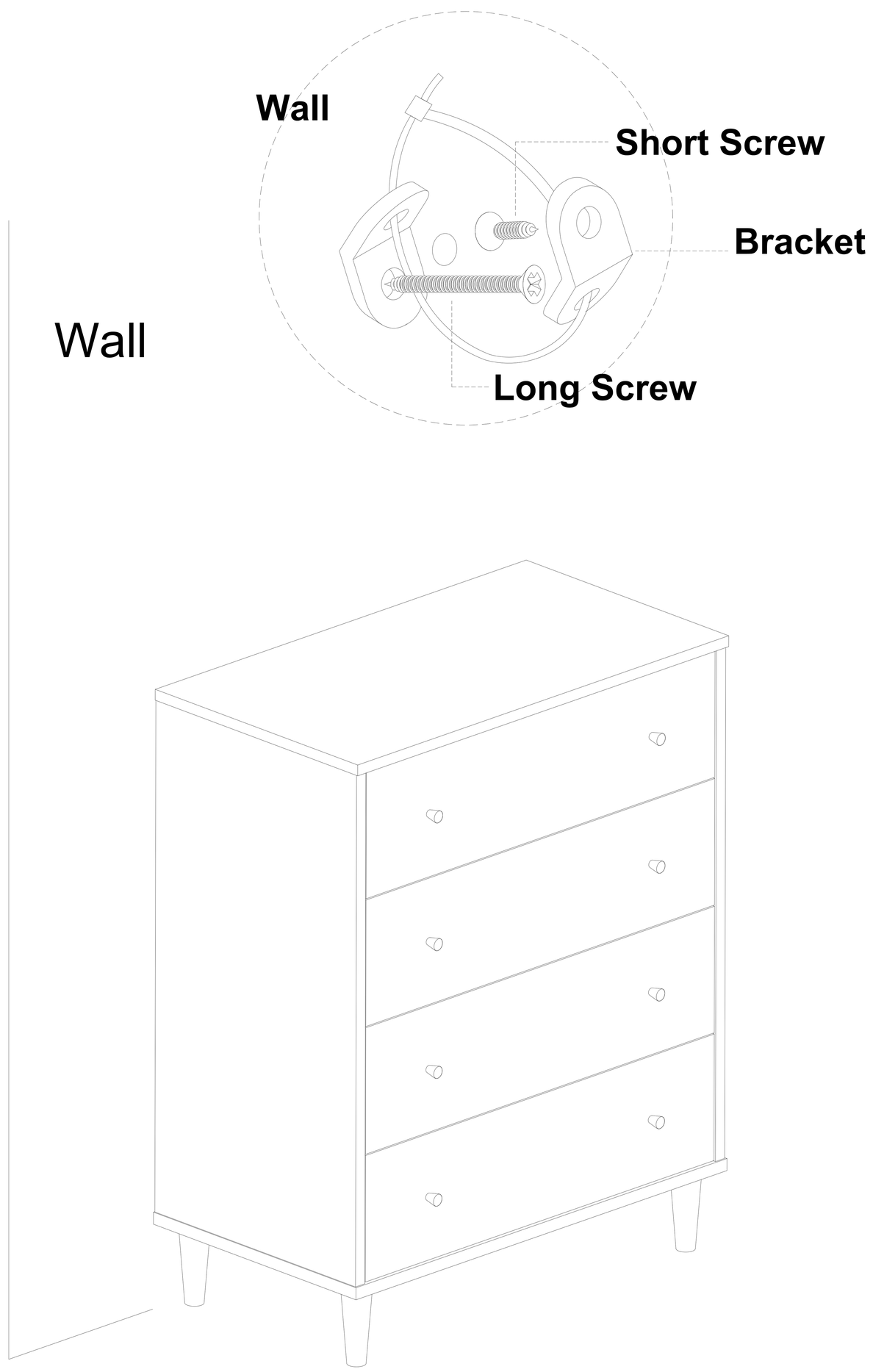

Cleaning & Care
Treat surface with care. Surface is resistant to scratches but is not scratch resistant. Clean surfaces with a dry or damp soft cloth. Do not use abrasive cleaners. Hardware may loosen over time. Periodically check that all connections are tight.