KOHLER. Faucets

Statement®

Three-function showerhead, 2.5 gpm

K-26290

Features

- Multifunction showerhead with advanced spray engine provides three spray experiences: Full Coverage with Katalyst technology, Deep Massage, and Cloud
- Full Coverage with Katalyst technology delivers a drenching spray experience, ideal for rinsing shampoo from hair; oblong shape targets shoulders
- Deep Massage streams twist and swirl, targeting sore muscles to ease away aches and pains
- Cloud spray experience restores with a thick cloud of silky, super-fine water droplets
- MasterClean™ sprayface features an easy-to-clean surface that withstands mineral buildup and maximizes spray performance
- Optimized sprayface for maximum performance

Material

- Premium material construction for durability and reliability
- KOHLER finishes resist corrosion and tarnishing

Technology

- Katalyst® air-induction technology infuses water with air, creating bigger drops for a more powerful spray

Installation

- 1/2" -14 NPT connection
- Wall-mount
- Shower arm and flange sold separately

Recommended Products/Accessories

K-26318 Shower arm and flange

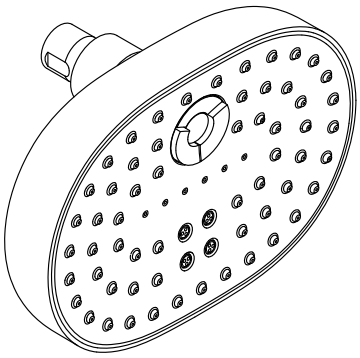

Codes/Standards

ASME A112.18.1/CSA B125.1
DOE - Energy Policy Act 1992
NOM Standards
NOM 008-CONAGUA

KOHLER® Faucet Lifetime Limited Warranty

See website for detailed warranty information.

Available Colors/Finishes

Color tiles intended for reference only.

Color	Code	Description
	CP	Polished Chrome
	SN	Vibrant® Polished Nickel
	AF	Vibrant® French Gold
	BN	Vibrant® Brushed Nickel
	BV	Vibrant® Brushed Bronze
	BL	Matte Black
	2MB	Vibrant® Brushed Moderne Brass
	TT	Vibrant Titanium
	BGP	Vibrant Brushed Graphite

KOHLER. Faucets

Statement®

Three-function showerhead, 2.5 gpm

K-26290

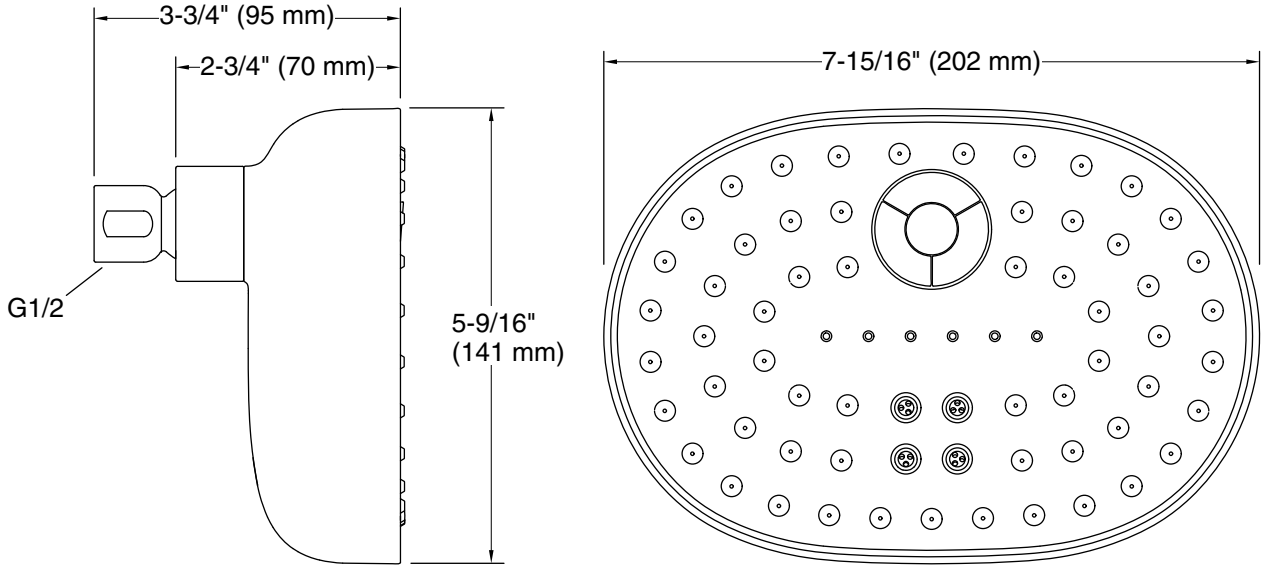

Technical Information

All product dimensions are nominal.

Spout:

Shower/Rainhead rated max flow: 2.5 gal/min (9.5 l/min)