alaterre
FURNITURE

ANTON CONSOLE TALE 56

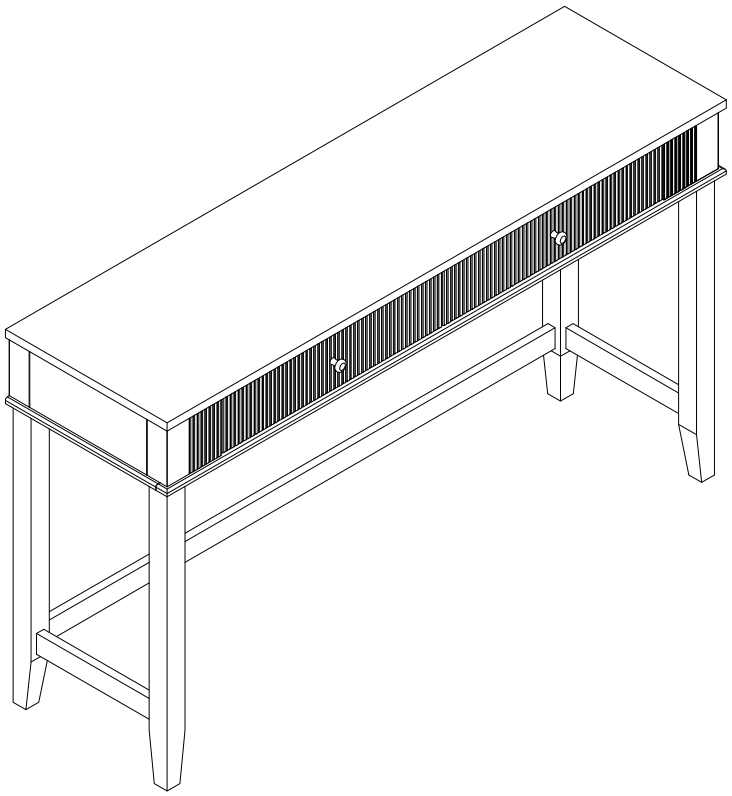

REPLACEMENT PARTS

Please do not contact the company purchased from as we can help you faster.
Order replacement parts and hardware at " www.TeamCustomerService.com "

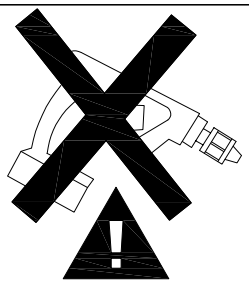

. Use of power tool to assemble this product will invalidate any claim and damage this product making it unsafe !!!
. Please assemble on a clean soft surface to avoid damage.

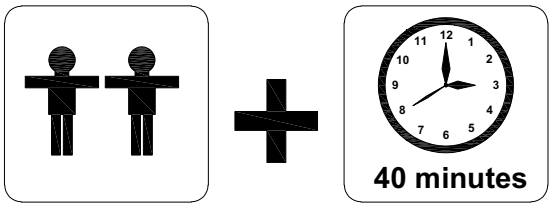

Tools Required

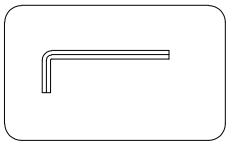

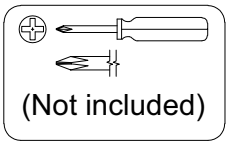

Part list - Anton Console Table 56

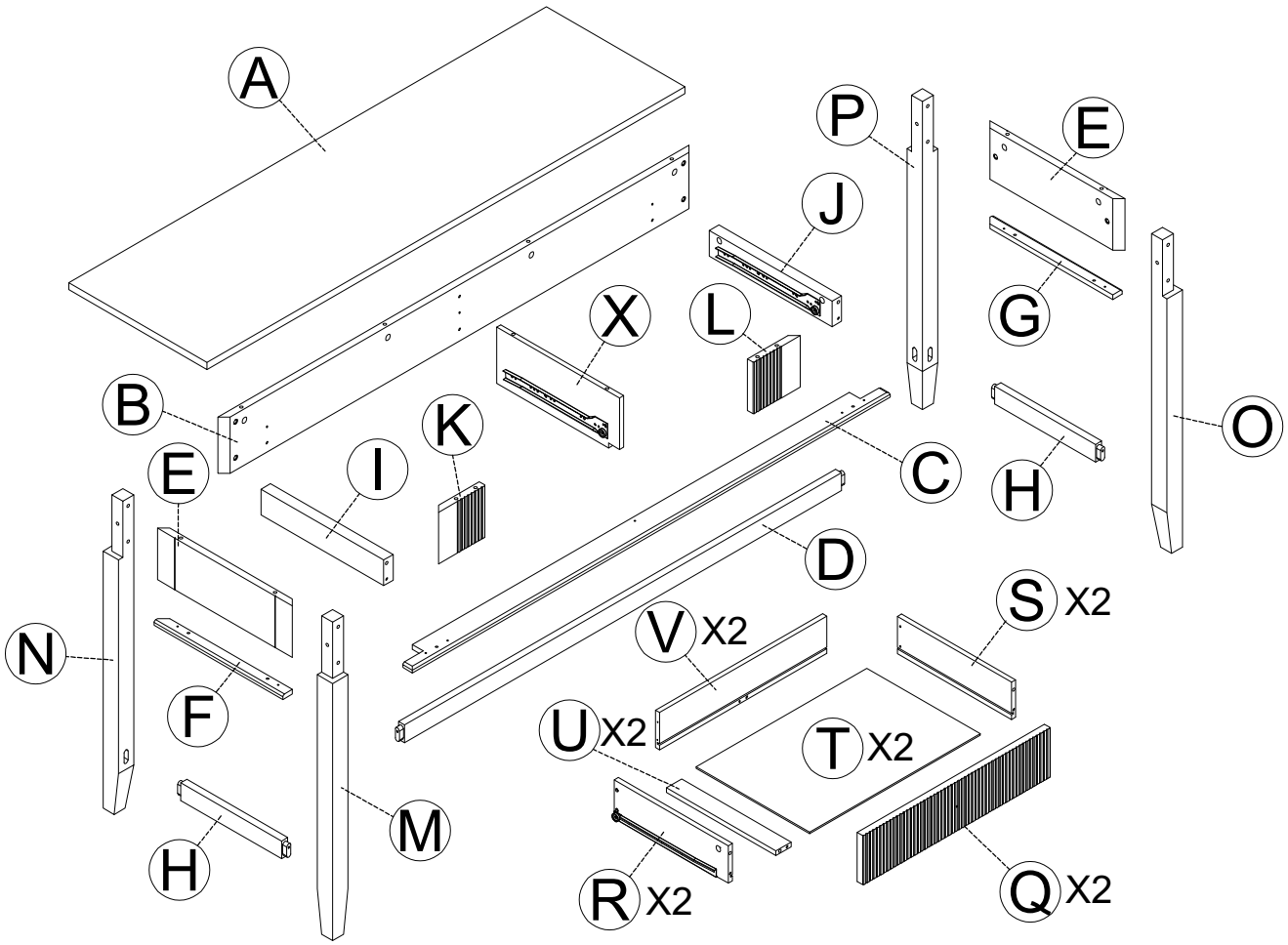

A	1	B	1	C	1	D	1	E	2	F	1	G	1	H	2
I	1	J	1	K	1	L	1	M	1	N	1	O	1	P	1
Q	2	R	2	S	2	T	2	U	2	V	2	X	1		

Identifying the hardware-*Identify the hardware using the illustrations below*

1 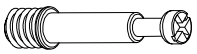 27 Ø6 x 35MM Cam Bridge	2  27 Ø15 x 9MM Cam Head	3 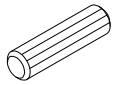 20 Ø6 x 30 Dowel
4  4 Leveler	5  2 Handle	6  2 M4 x 25 Bolt
7  8 M3.5 x 20MM Screw	8  8 M4 x 30MM Screw	9  7 M4 x 45MM Screw
10  12 M6 x 45 Bolt	11  1 ALLEN KEY	12  1 Ø10 x 10MM Plastic Nut

ASSEMBLY DESCRIPTION

STEP 1

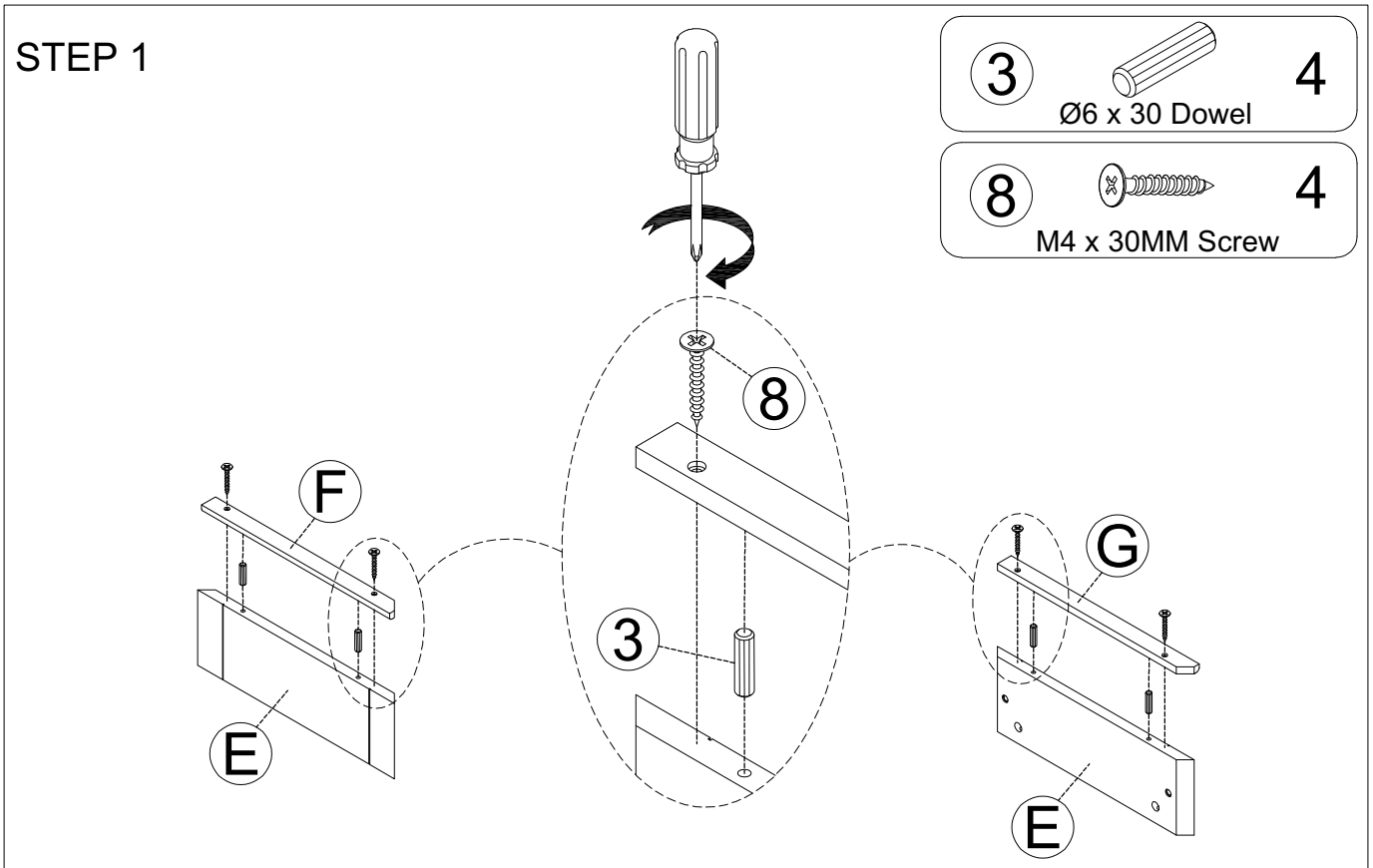

STEP 2

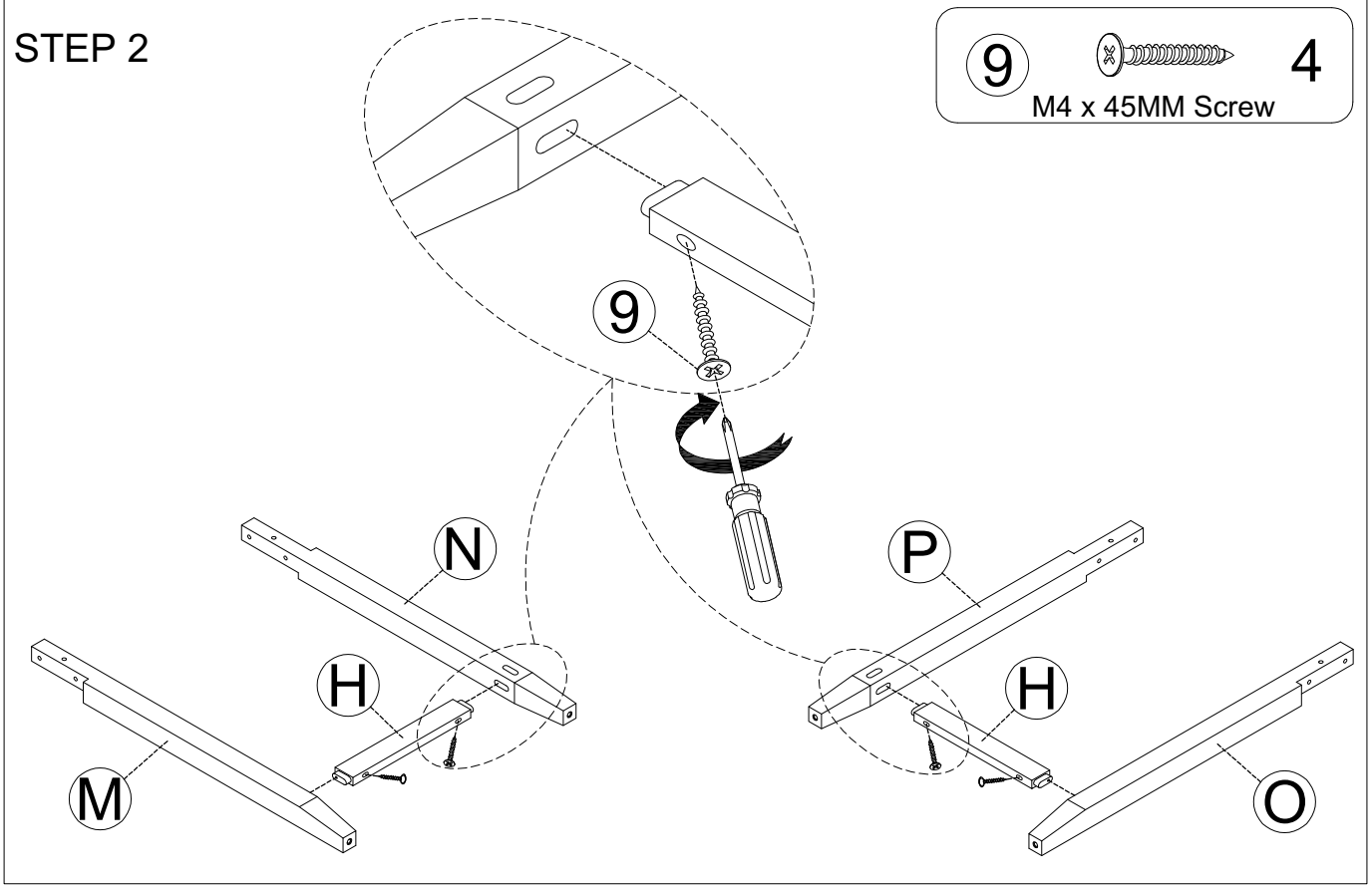

ASSEMBLY DESCRIPTION

STEP 3

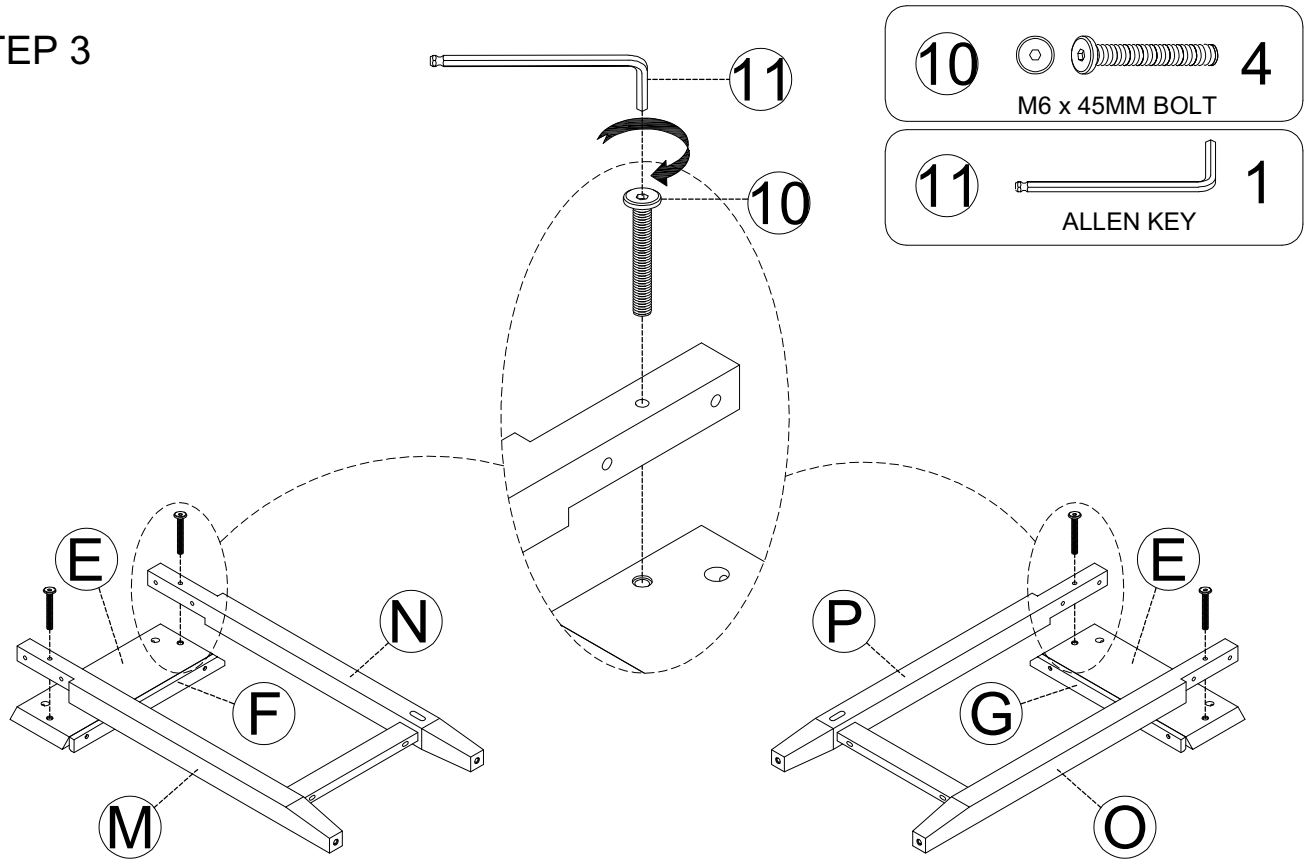

10 — 4
M6 x 45MM BOLT

11 — 1
ALLEN KEY

STEP 4

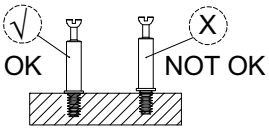

1 — 5
Ø6 x 35MM Cam Bridge

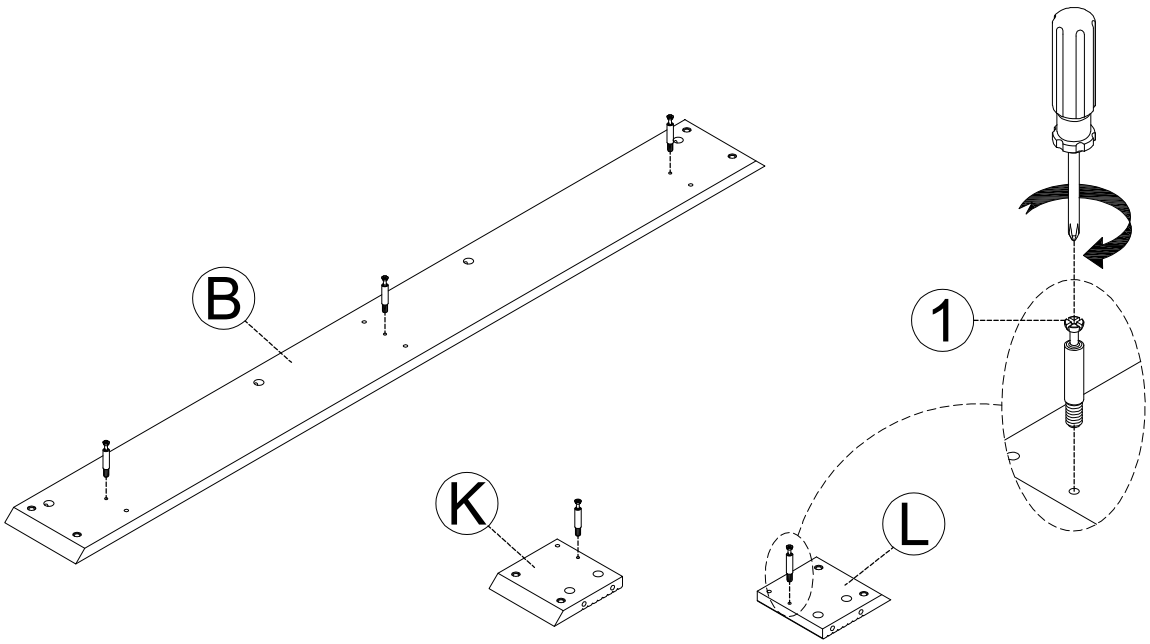

ASSEMBLY DESCRIPTION

STEP 5

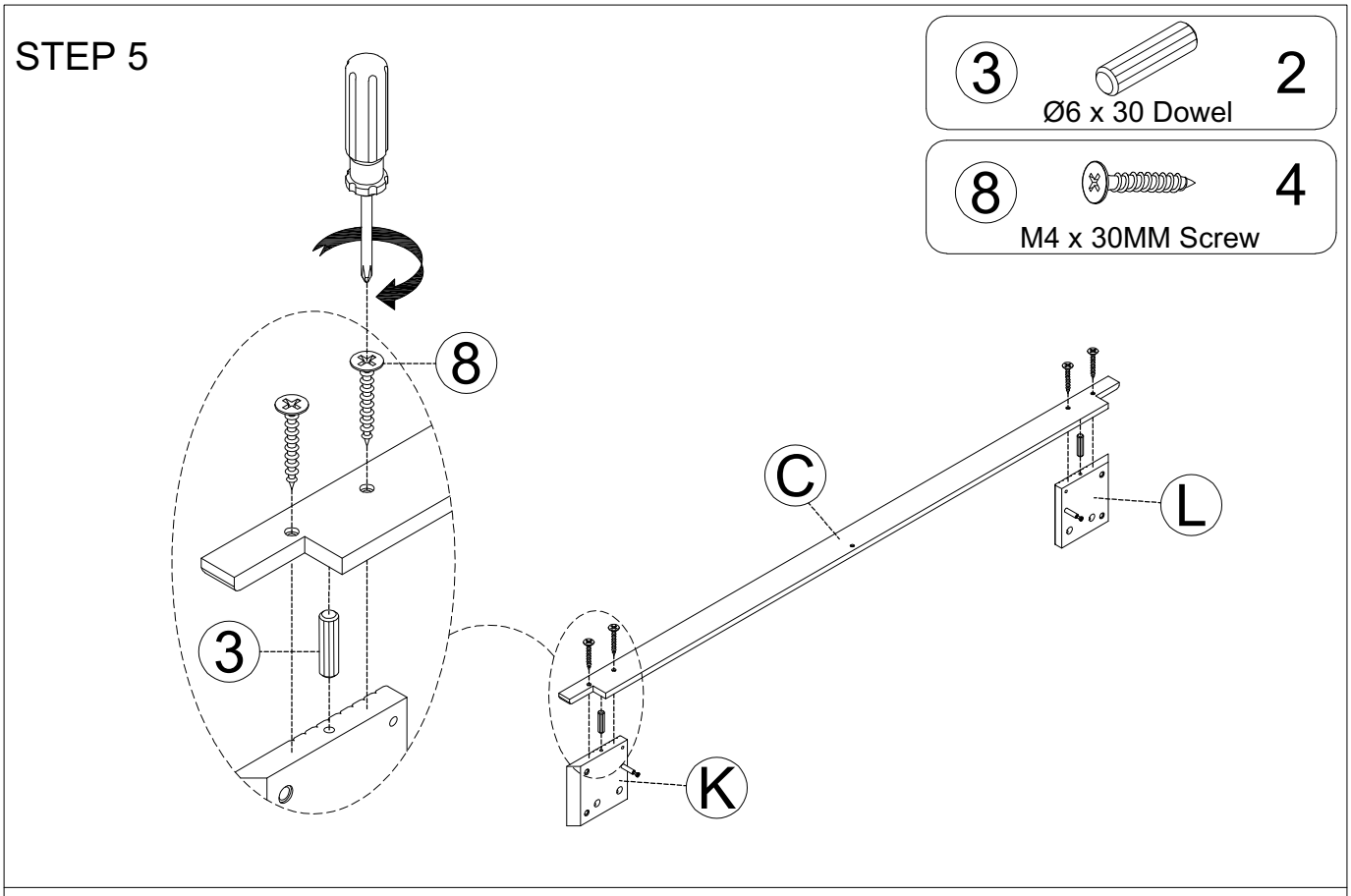

STEP 6

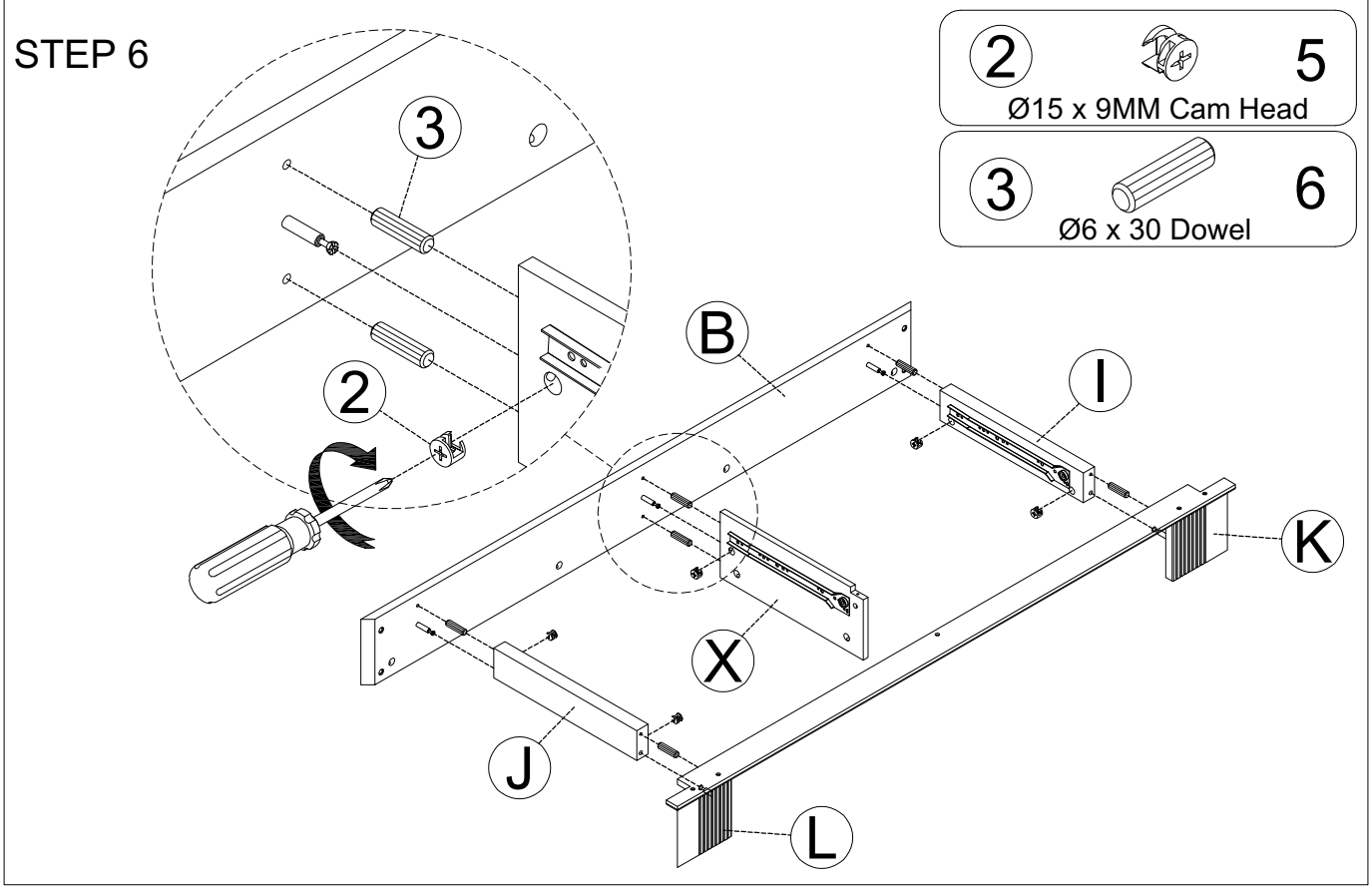

ASSEMBLY DESCRIPTION

STEP 7

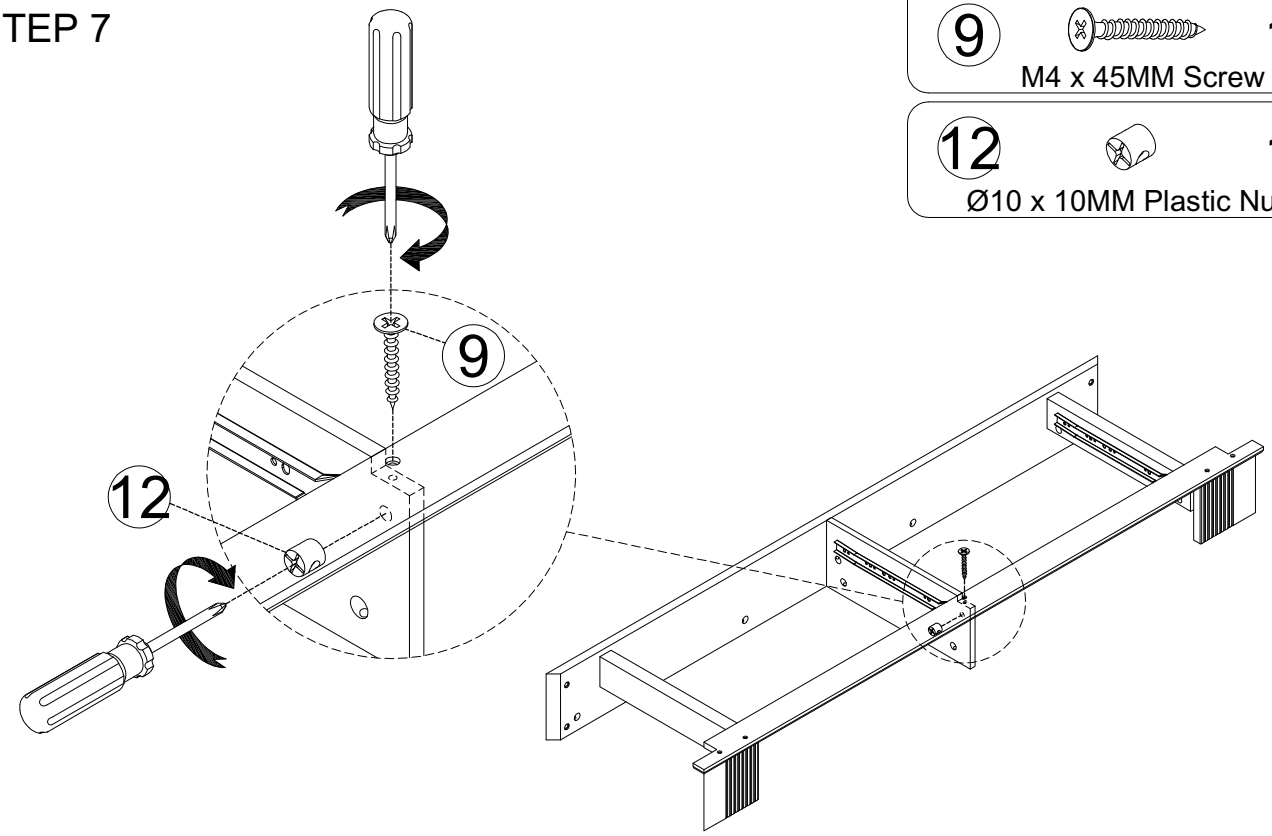

9 — 1
M4 x 45MM Screw

12 — 1
Ø10 x 10MM Plastic Nut

STEP 8

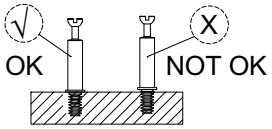

1 — 14
Ø6 x 35MM Cam Bridge

ASSEMBLY DESCRIPTION

9	10	11
2	8	1
M4 x 45MM Screw	M6 x 45MM BOLT	ALLEN KEY

STEP 9

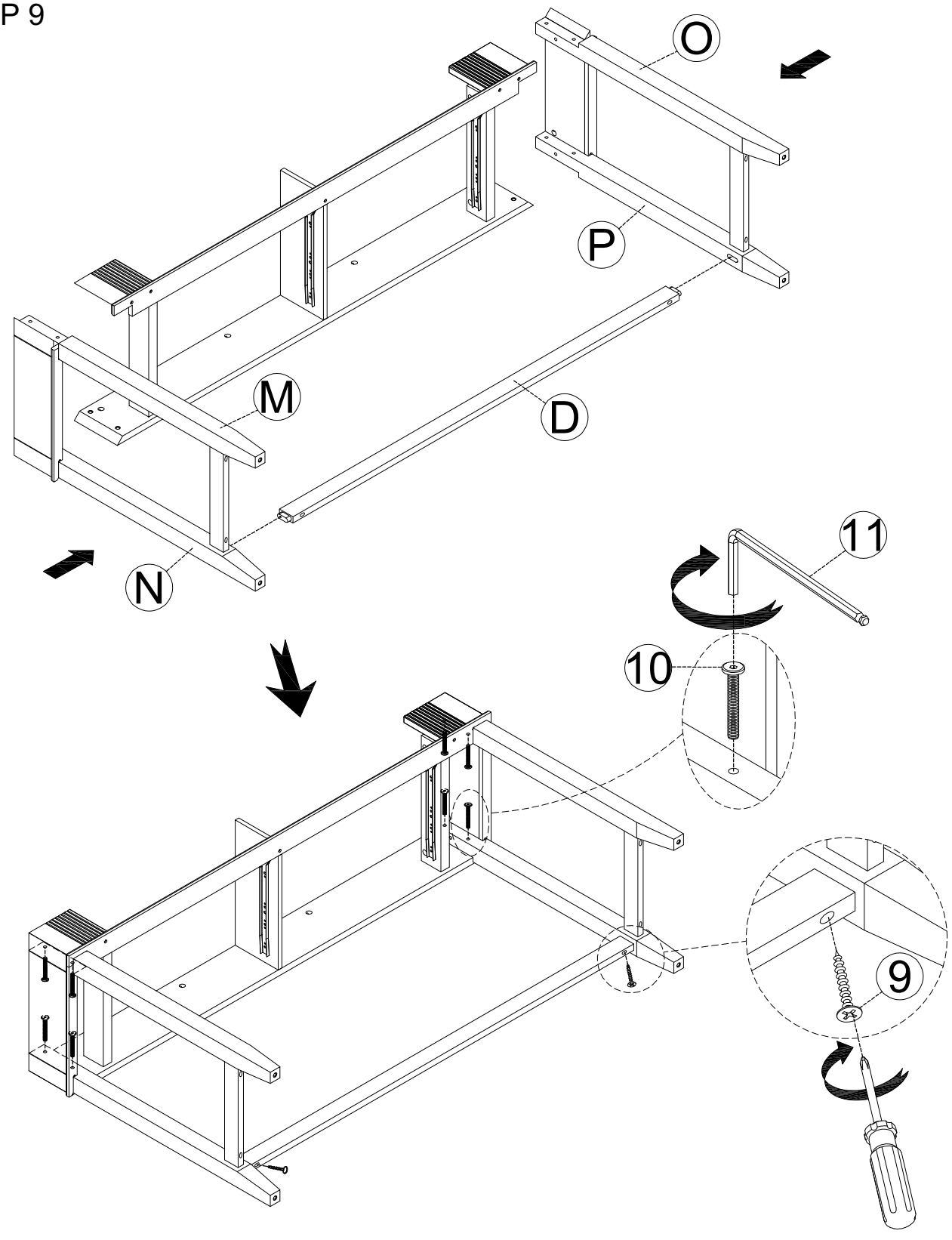

ASSEMBLY DESCRIPTION

STEP 10

2  14

Ø15 x 9MM Cam Head

STEP 11

4  4

Leveler

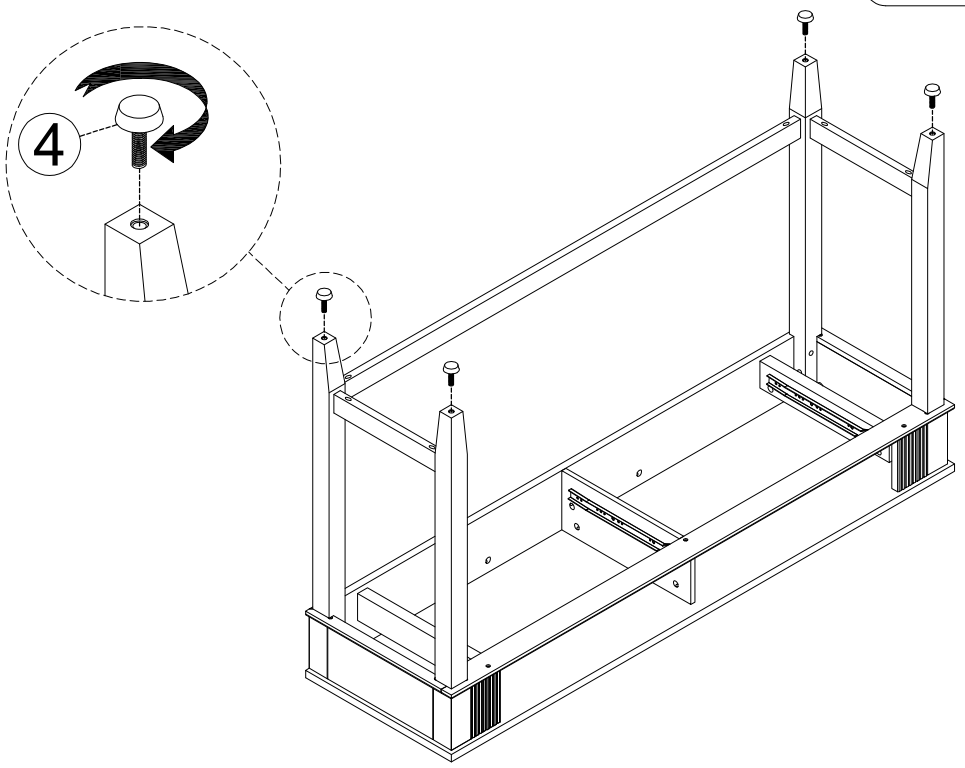

ASSEMBLY DESCRIPTION

STEP 12

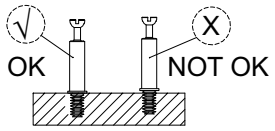

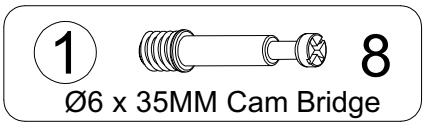

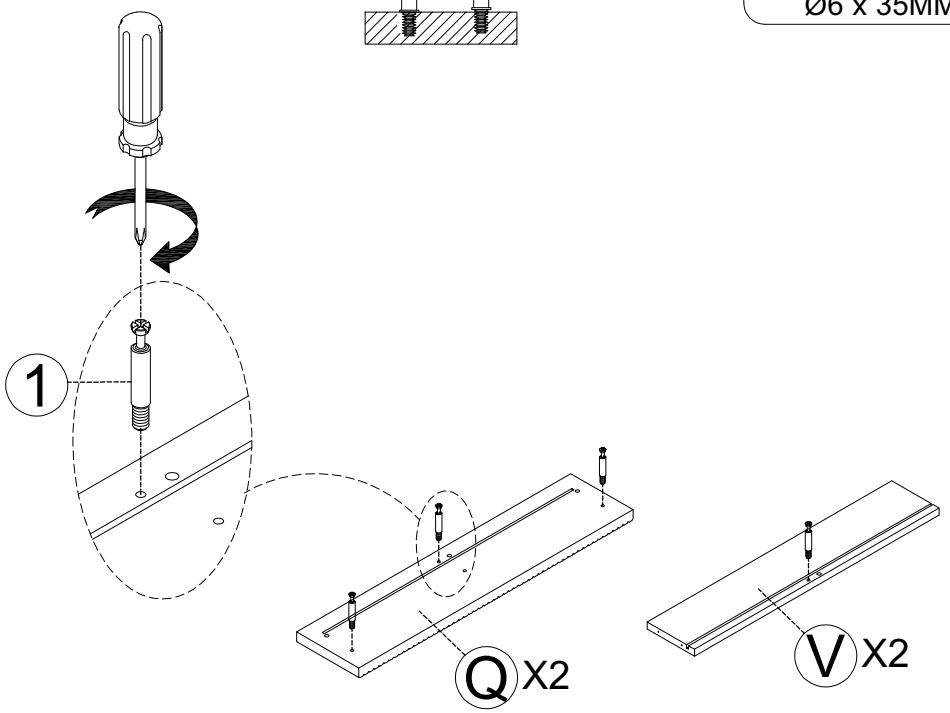

STEP 13

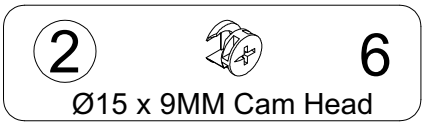

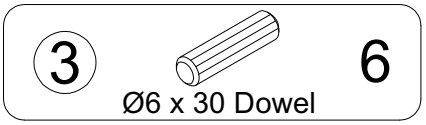

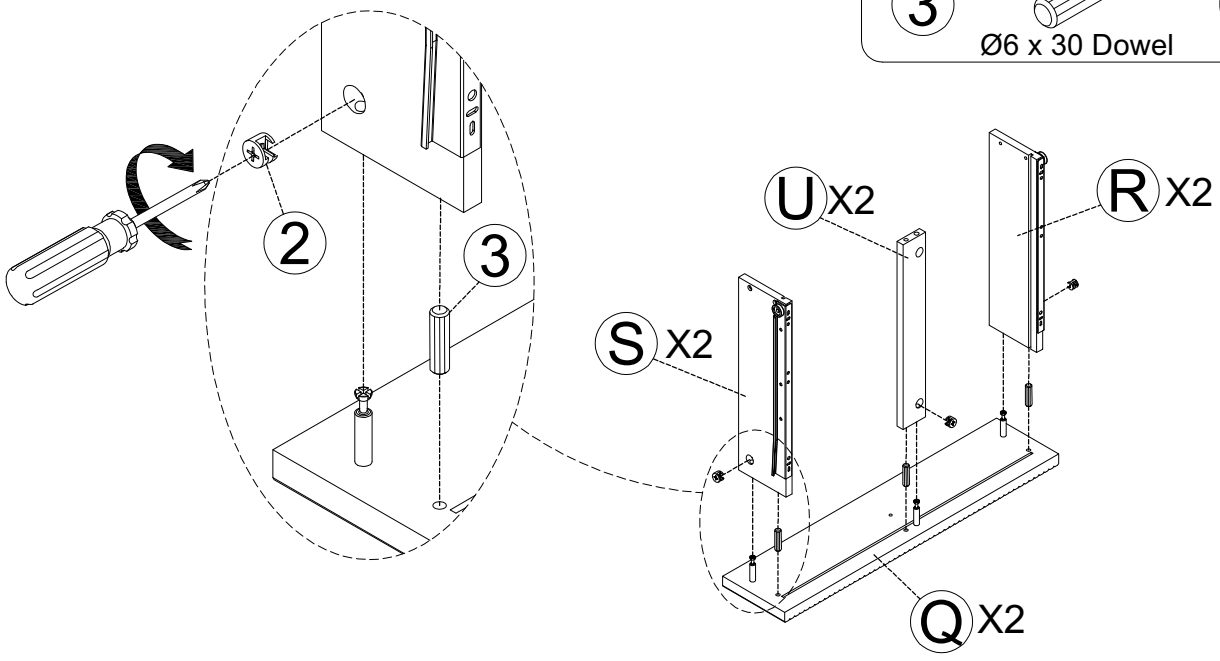

ASSEMBLY DESCRIPTION

STEP 14

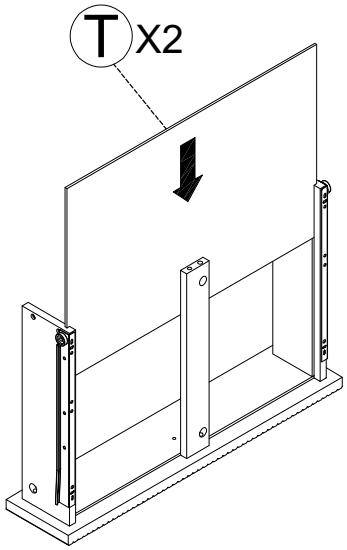

STEP 15

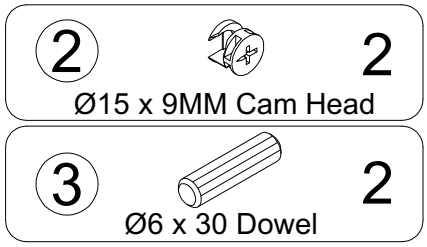

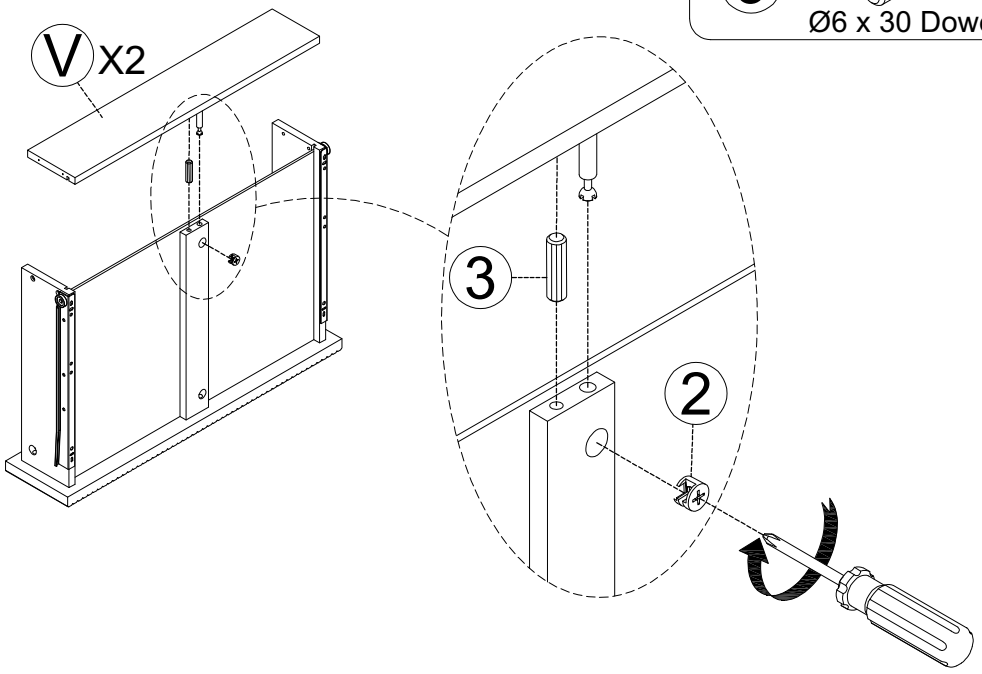

ASSEMBLY DESCRIPTION

STEP 16

7  8
M3.5 x 20MM Screw

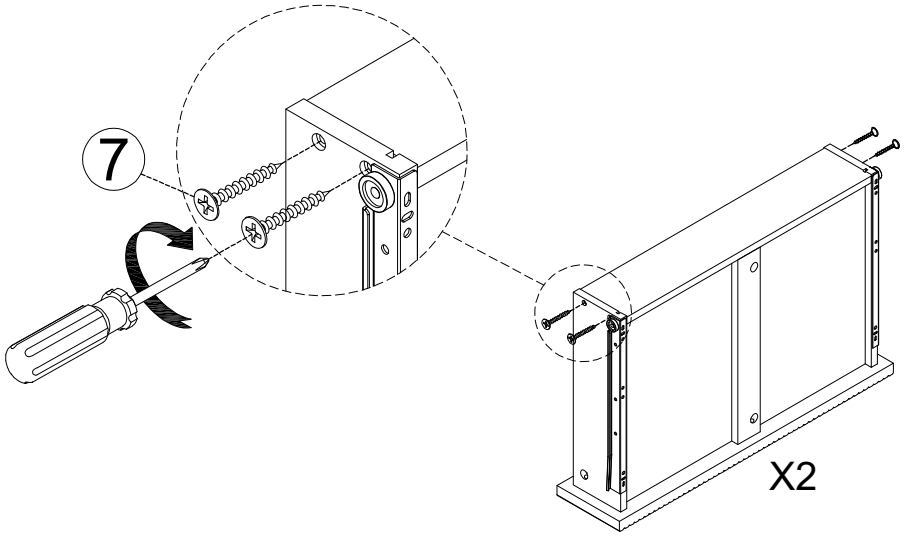

STEP 17

5  2
Handle

6  2
M4 x 25 Bolt

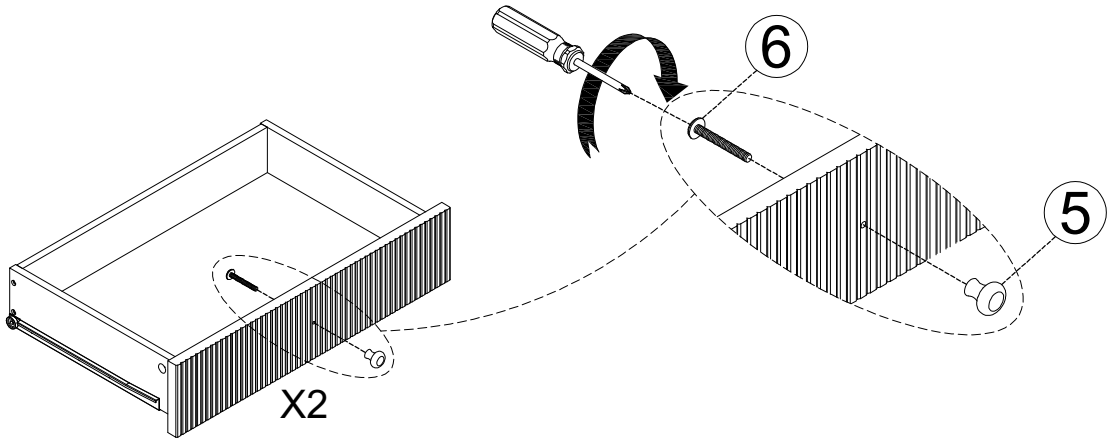

ASSEMBLY DESCRIPTION

STEP 18

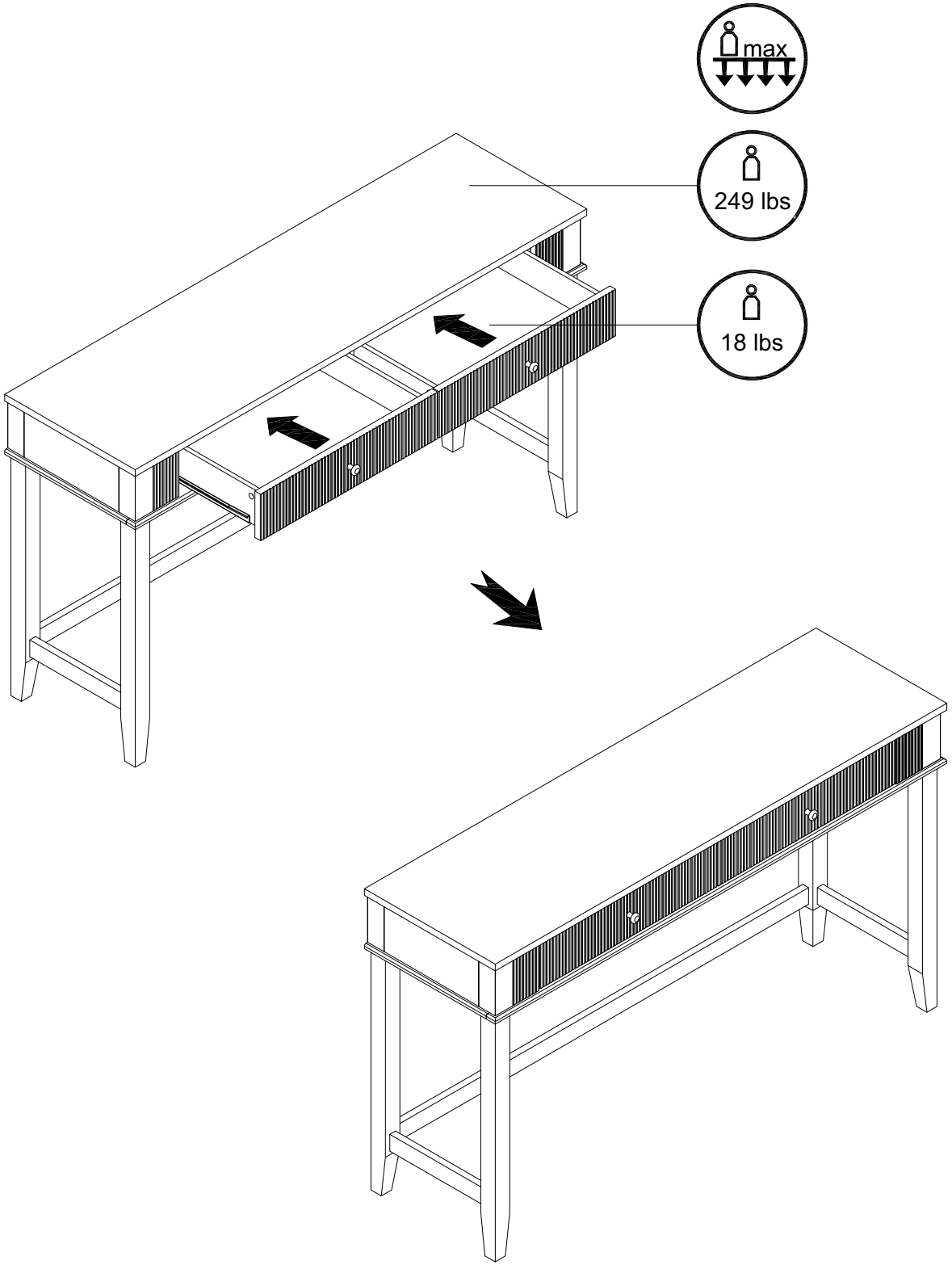

Finished