MONOGRAM 48" BUILT-IN SIDE-BY-SIDE REFRIGERATOR

ZISB480DN

MONOGRAM

WIFI CONNECT
Enjoy the convenience and freedom of wirelessly controlling functions from your smartphone

LED LIGHTING
Light columns in the freezer and fresh food compartments extend the full length of the interior and LED lighting located inside the vegetable and climate-control drawers illuminate contents without compromising space

COLOR-MATCHED DISPENSER WITH PROXIMITY SENSOR
Designed to accommodate glassware of all sizes, from pitchers to tumblers; control graphics light up as you approach and automatically switch off when

GE® WATER FILTER
Has been moved from the fresh food compartment to the overhead cabinet, where it is discreetly out of sight

DELI DRAWER ON FULL-EXTENSION SLIDES
Keeps meats, cheeses and other everyday foods within easy reach

SEALED VEGETABLE DRAWER
Helps preserve the freshness of foods

ADJUSTABLE GLASS SHELVES
Easily accommodate party trays and platters

GALLON-SIZE DOOR BIN
Holds milk containers, two-liter bottles and pitchers

ADJUSTABLE DOOR BINS
Can be moved to one of two positions in seven locations

DAIRY BIN WITH CENTER DIVIDER
Has a unique magnetic seal that locks in freshness

FILTER-CHANGE INDICATOR LIGHT
Located on the upfront control panel, provides a visual reminder when it's time to replace the filter for the water dispenser

SABBATH MODE
Designed to disable functions in accordance with Sabbath-observing practice

MONOGRAM

SECTION 1

STANDARD INSTALLATION

1/4" FRAMED PANELS

3/4" OVERLAY PANELS

SECTION 2

FLUSH INSET INSTALLATION

MONOGRAM

SPECIFICATIONS

Overall Width	48" (121.92 cm)
Overall Height	84" (213.36 cm)
Overall Depth	25 3/4" (65.4 cm)
Door Clearance	28 5/8" (72.1 cm)
Cutout Width	47 1/2" (120.7 cm)
Cutout Height	84±.500 (212.1 - 214.6 cm)
Cutout Depth	24" (61 cm)
Plumbing Requirements	1/4" OD copper tubing or GE SmartConnect kit
Shipping Weight	775 lb

ATTENTION ELECTRICIAN:

A 115 volt 60Hz., 15 or 20 amp power supply is required. An individual properly grounded branch circuit or circuit breaker is recommended. Install a properly grounded 3-prong electrical receptacle recessed into the back wall.

OVERALL DIMENSIONS

STANDARD INSTALLATION

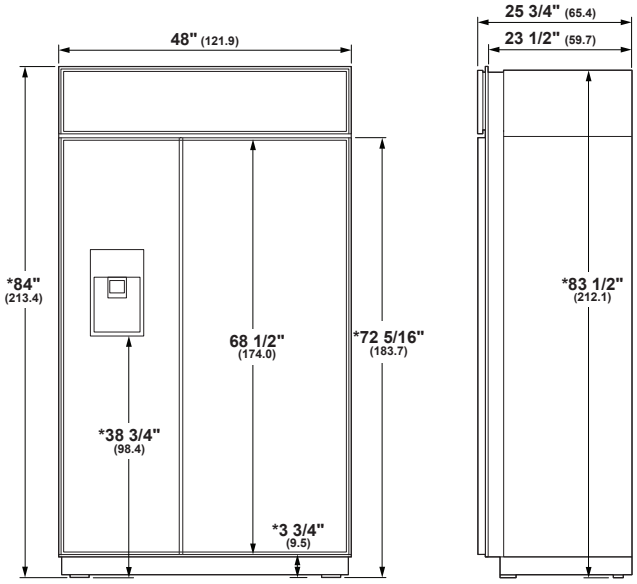

FRONT VIEW

SIDE VIEW

* Shipping height. Use leveling legs and wheels for maximum 1" height adjustment from shipping height.

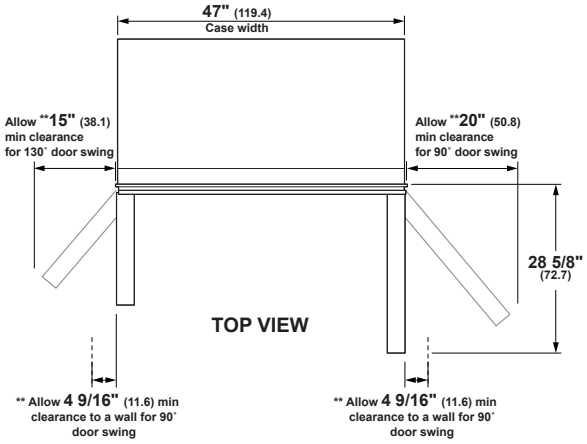

** These refrigerators are equipped with a 3-position door stop. The factory-set 115° door swing can be adjusted to 90° if clearances to adjacent cabinets or walls is restricted. Allow full 130° door swings for pan removal. If the 90° door stop position is used, pan access is maintained, but pan removal is restricted. Dimensions based on custom handle height of 2 9/16" (6.5).

Dimensions in parentheses are in centimeters unless otherwise noted. Actual product dimensions may vary due to manufacturing tolerances.

MONOGRAM

STANDARD INSTALLATION

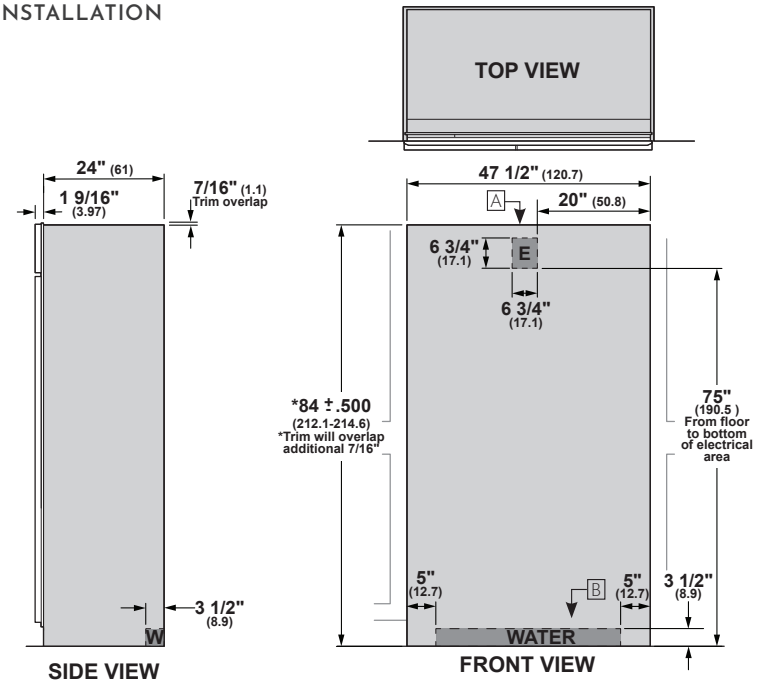

The refrigerator will project forward, slightly beyond adjacent cabinetry.

ANTI-TIP BRACKET

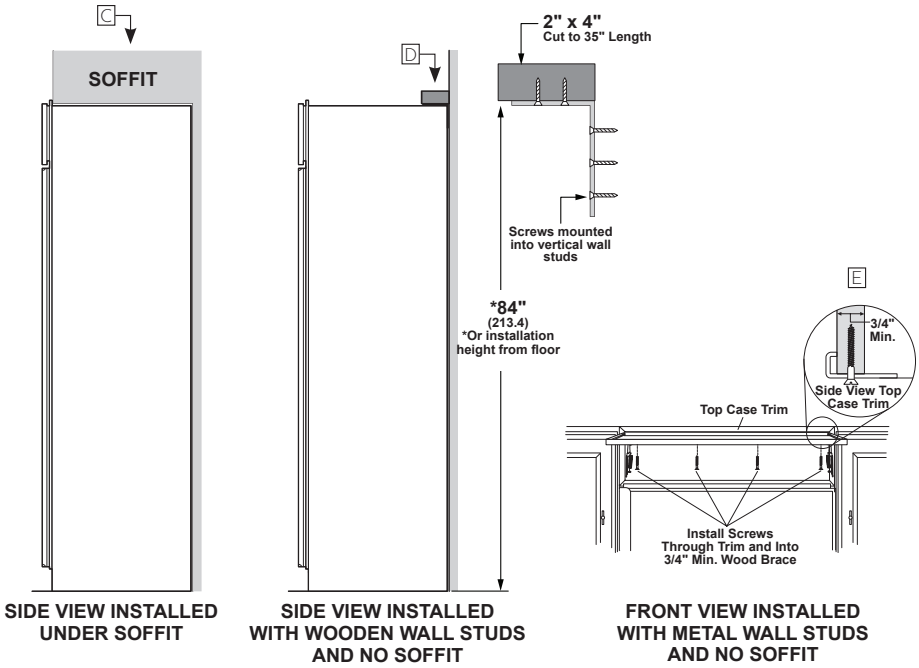

STANDARD INSTALLATION

HELPFUL TIPS

A Mounting the junction box in this location will also allow for front accessibility through access panel.

B Water supply area.

⚠ WARNING:
The refrigerator is top heavy and must be secured to prevent the possibility of tipping forward. Failure to do so may result in death or serious injury.

The information below is for cabinet design only. When installing the anti-tip system you must use the product installation instructions.

Determine your installation construction and required anti-tip configuration:

C Installed Under Soffit
After installing unit into installation opening, raise grille panel and screw metal case sides to adjacent cabinet. When installed under a soffit, the soffit cannot exceed 24" deep. The top case trim overlaps the bottom of the soffit.

D Wooden Wall Studs and No Soffit
- Cut a 2" x 4" block and secure to brackets provided.
- Secure brackets to back wall of opening at 84" or your installation height from the floor.

E Metal Wall Studs and No Soffit
This method requires securely fastened cabinets on both sides and a 3/4" minimum wood brace above unit, with it's front surface 24" from back wall.
- After installing unit into opening, raise grille panel and attach metal case top trim to 3/4" minimum wood brace.
- The brace spanning the enclosure must be securely fastened to cabinets on both sides.

See Installation Instructions for detailed instructions.

CUSTOM SIDE PANELS

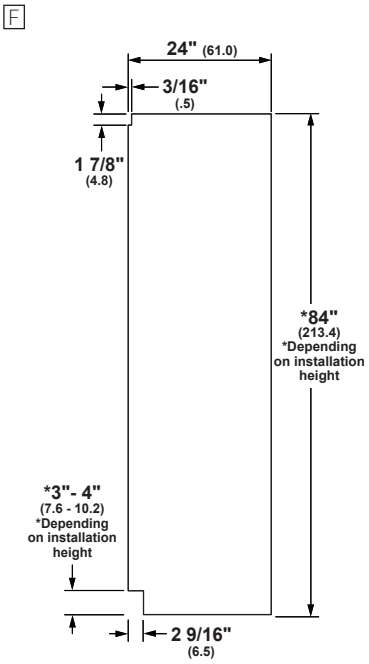

STANDARD INSTALLATION

HELPFUL TIPS

F Side panels must be used whenever the sides of the refrigerator will be exposed. The 1/4" side panels will slip into the side case trim. Secure the panels to the refrigerator with stick-on hook and loop fastener strips. Order the side panels from the cabinet manufacturer.

MONOGRAM

1/4" FRAMED PANEL DIMENSIONS

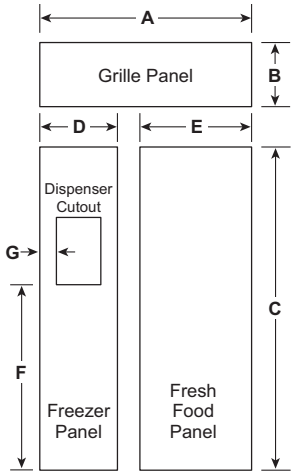

PANEL ASSEMBLY CROSS SECTION

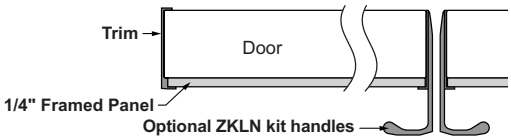

PANEL DIMENSIONS

	A	B	C	D	E
1/4" Framed Panel	45 7/8"	9 1/2"	68 3/8"	18 9/16"	26 9/16"

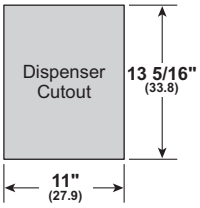

DISPENSER CUTOUT POSITION

F	G
34 3/16"	3 7/8"

3/4" OVERLAY PANEL DIMENSIONS

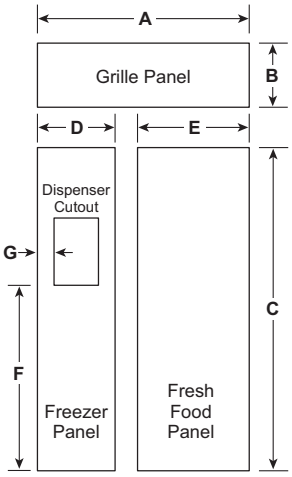

PANEL ASSEMBLY CROSS SECTION

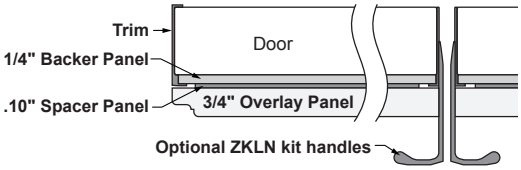

PANEL DIMENSIONS

	A	B	C	D	E
1/4" Backer Panel	45 7/8"	9 1/2"	68 3/8"	18 9/16"	26 9/16"
.10" Spacer Panel	45"	8 5/8"	67"	17 1/4"	25 1/4"
3/4" Overlay Panel	46 1/8"	9 3/4"	68 5/8"	18 13/16"	26 13/16"

.25" + .10" + .75" = 1.10" Total Panel Thickness

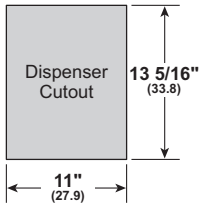

*DISPENSER CUTOUT POSITION

F	G
34 5/16"	4"

* Cut the dispenser opening after the backer, spacer and overlay panels have been assembled.

STANDARD INSTALLATION

HELPFUL TIPS

Trimmed refrigerators are designed to be customized with decorative panels. Field-installed custom door and grille panels are required.

1/4" FRAMED PANELS:
For 1/4" thick custom panels ordered from your cabinet maker; the decorative panels slide into the trim.

MAXIMUM TOTAL PANEL WEIGHT:
- Fresh food door panel – 75 lbs.
- Freezer drawer panel – 53 lbs.
- Grille panel – 18 lbs

3/4" OVERLAY PANELS:
For 3/4" thick custom panels ordered from your cabinet maker; the decorative panels slide into the trim.

The overlay panel must be secured to a 1/4"-thick backer panel which slides into the trim.
A spacer panel 0.10" thick must be placed between the overlay and backer panels.

Center each panel over the other. Assemble the panels with glue and screws. Screws must be countersunk into the backer panel.

NOTE: Left-to-right offset is not always equal to top-to-bottom offset.

MAXIMUM TOTAL PANEL WEIGHT:
- Fresh food door panel – 75 lbs.
- Freezer drawer panel – 53 lbs.
- Grille panel – 18 lbs

Door handles not included. Custom handles supplied by your cabinet maker may be used. Optional visor handle kit ZKLN is available for ordering. Kit includes two handles.

MONOGRAM

DISPENSER TRIM

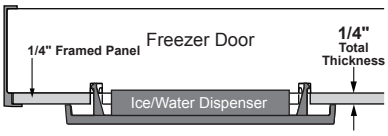

1/4" PANEL DISPENSER TRIM

A

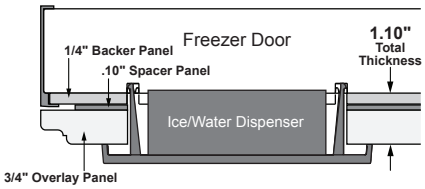

3/4" OVERLAY PANEL DISPENSER TRIM

B

RAISED OVERLAY PANEL DESIGN ON DISPENSER MODELS

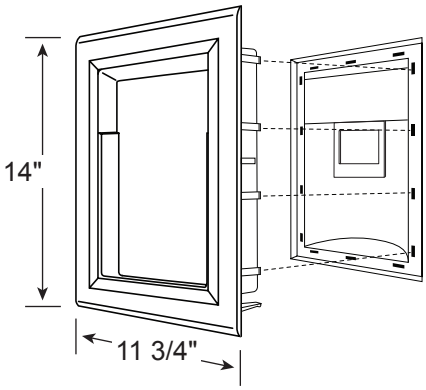

DISPENSER TRIM

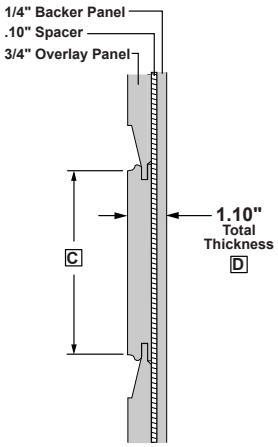

SIDE VIEW CROSS SECTION

(SHOWING RAISED OVERLAY WITH MIDDLE RAIL)

STANDARD INSTALLATION

HELPFUL TIPS

These refrigerators are supplied with two dispenser trims, one for framed panels and one for overlay panels.

1/4" PANEL DISPENSER TRIM:
The framed panel must be 1/4" nominal thickness to fit the dispenser trim.

- The dispenser trim fits over the custom panel and snaps into the freezer door.
- If the panel is less than 0.250" thick, a noticeable gap may be created around the dispenser trim. Foam tape may be applied on the door to improve the fit.
- If the panel is more than 0.250" thick, the dispenser trim cannot be secured to the door.

3/4" OVERLAY PANEL DISPENSER TRIM:
The 3/4" overlay dispenser trim is designed to fit a total panel thickness of 1.100".

- If the panel is less than 1.100" thick, a noticeable gap may be created around the dispenser trim.
- If the panel is more than 1.100" thick, the dispenser trim cannot be secured to the door.
- The overlay panel must be constructed according to the specifications shown to achieve the correct total thickness.
- Alternative panel construction methods such as securing a 3/4" panel to a 1/4" backer panel cannot be used. Another method, routing a 3/4"-thick panel on all sides, cannot be used. These methods will not result in the required 1.100" panel thickness.
- When a raised panel design is to be used, a custom middle rail is required.

RAISED OVERLAY PANEL DESIGN ON DISPENSER MODELS:
When a raised panel design is to be used, a custom wide middle rail is required to accept the dispenser trim.

- The middle rail must be wide enough to allow for the dispenser trim to overlap the opening.
- The middle rail must be 1.10" total thickness to accept the dispenser trim.

MONOGRAM

SPECIFICATIONS

Overall Width	50" (127.0 cm)t
Overall Height	84 1/2" (214.6 cm) t
Overall Depth	26" (66.0 cm) t
Door Clearance	28 5/8" (72.1 cm)
Cutout Width	51" (129.5 cm)
Cutout Height	85" (215.9 cm)
Cutout Depth	26 3/16" (66.5 cm)
Plumbing Requirements	1/4" OD copper tubing or GE SmartConnect kit
Shipping Weight	775 lb (351.5 kg)

t Dimensions include 3/4" custom cabinet panel

ATTENTION ELECTRICIAN:

A 115 volt 60Hz., 15 or 20 amp power supply is required. An individual properly grounded branch circuit or circuit breaker is recommended. Install a properly grounded 3-prong electrical receptacle recessed into the back wall.

OVERALL DIMENSIONS AFTER PANEL INSTALL

FLUSH INSET INSTALLATION

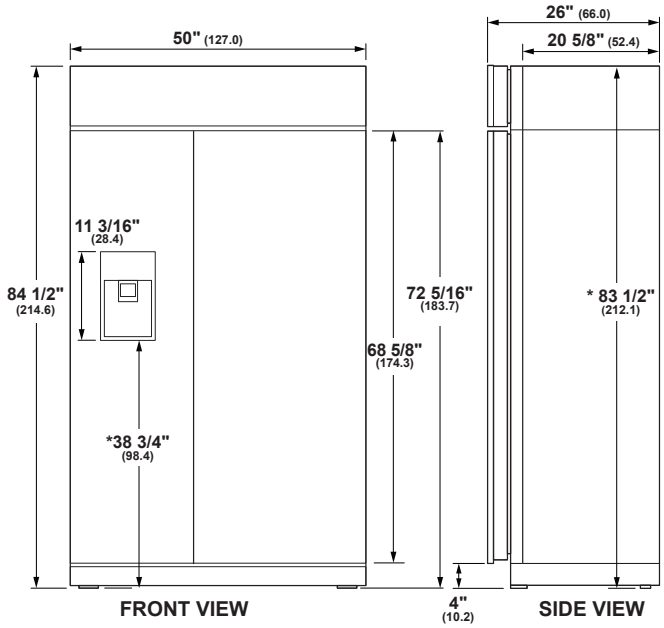

Use leveling legs and wheels for maximum 1" height adjustment from shipping height. Nominal installation height is 84"

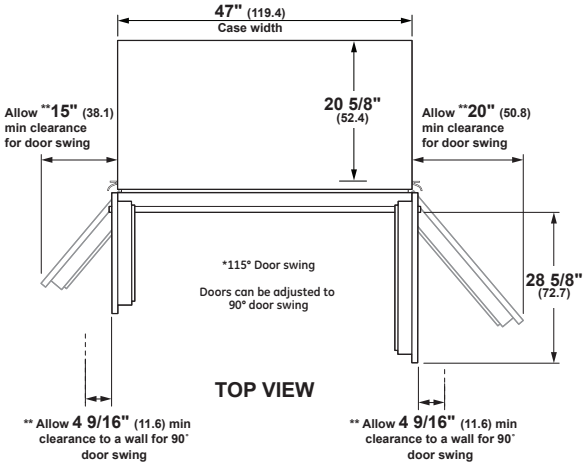

** These refrigerators are equipped with a 3-position door stop. The factory-set 115° door swing can be adjusted to 90° if clearances to adjacent cabinets or walls is restricted. Allow a 15" minimum clearance to wall for pan removal. If the 90° door stop position is used, pan access is maintained, but pan removal is restricted. A 130° door swing option is available for standard installation only. Dimensions based on custom handle height of 2-9/16" (6.5).

Dimensions in parentheses are in centimeters unless otherwise noted. Actual product dimensions may vary due to manufacturing tolerances.

MONOGRAM

FLUSH INSET INSTALLATION 3/4" PANELS

FLUSH INSET KIT ZKFN REQUIRED

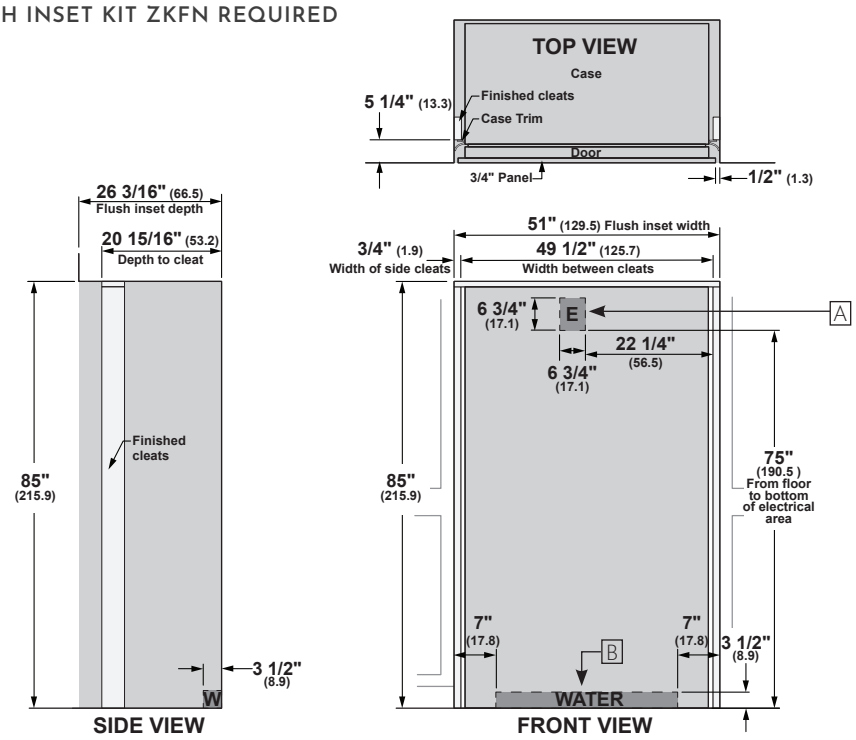

ANTI-TIP BRACKET

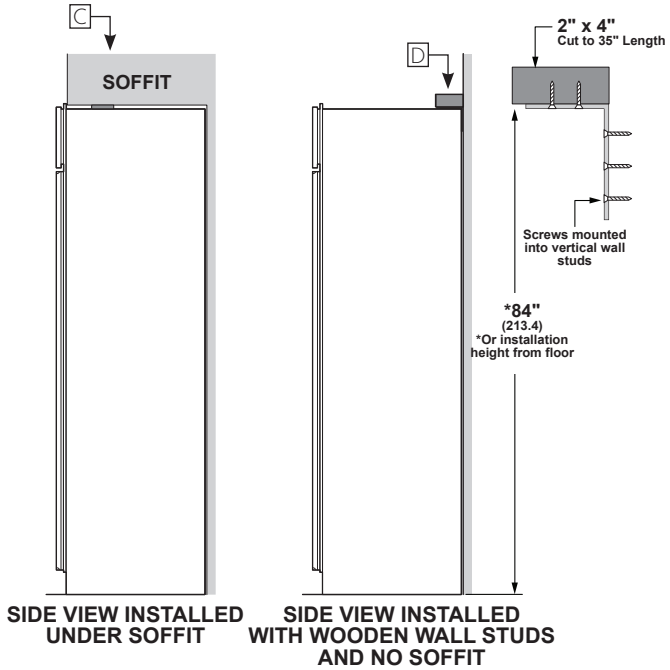

FLUSH INSET INSTALLATION

HELPFUL TIPS

A Mounting the junction box in this location will also allow for front accessibility through access panel.

B Water supply area.

⚠ WARNING:

The refrigerator is top heavy and must be secured to prevent the possibility of tipping forward. Failure to do so may result in death or serious injury.

The information below is for cabinet design only. When installing the anti-tip system you must use the product installation instructions.

Determine your installation construction and required anti-tip configuration:

C Cut a 1" x 4" block 35" long. Measure and mark under the soffit, 5 1/4" from the front edge of the cabinet. Secure the wood block under the soffit. From the bottom of the block to the finished floor should measure 84".

D Wooden Wall Studs and No Soffit
- Cut a 2" x 4" block and secure to brackets provided.
- Secure brackets to back wall of opening at 84" or your installation height from the floor.

See Installation Instructions for detailed instructions.

MONOGRAM

FLUSH INSET INSTALLATION 1/2" PANELS

FLUSH INSET KIT ZKFN REQUIRED

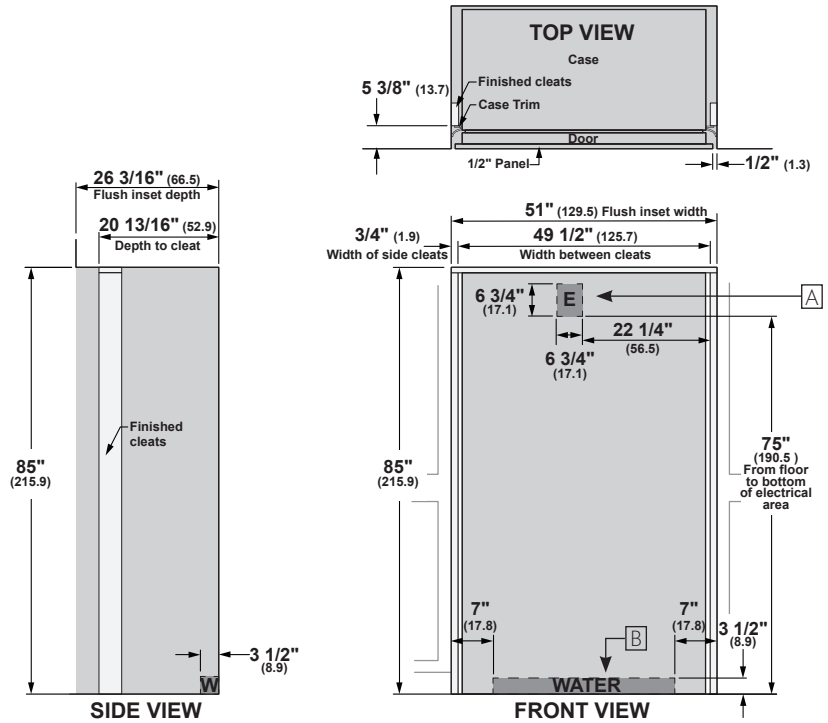

ANTI-TIP BRACKET

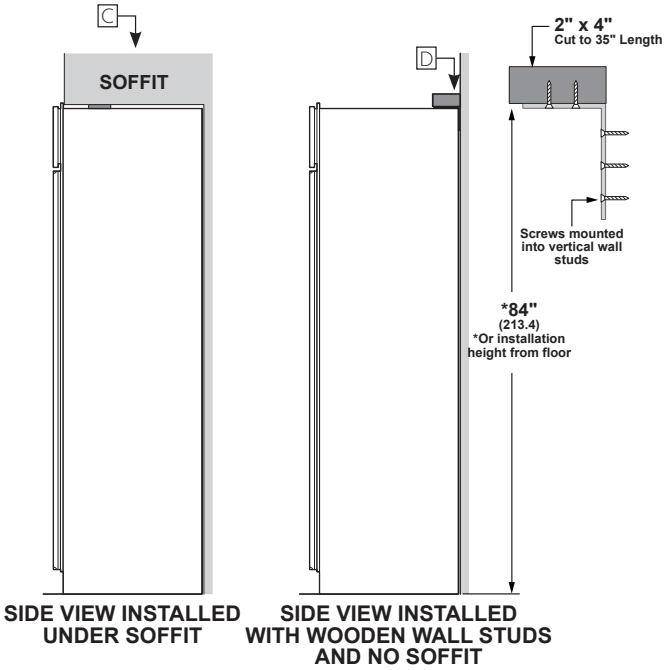

FLUSH INSET INSTALLATION

HELPFUL TIPS

A Mounting the junction box in this location will also allow for front accessibility through access panel.

B Water supply area.

⚠ WARNING:

The refrigerator is top heavy and must be secured to prevent the possibility of tipping forward. Failure to do so may result in death or serious injury.

The information below is for cabinet design only. When installing the anti-tip system you must use the product installation instructions.

Determine your installation construction and required anti-tip configuration:

C Cut a 1" x 4" block 35" long. Measure and mark under the soffit, 5 3/8" from the front edge of the cabinet. Secure the wood block under the soffit. From the bottom of the block to the finished floor should measure 84".

D Wooden Wall Studs and No Soffit
- Cut a 2" x 4" block and secure to brackets provided.
- Secure brackets to back wall of opening at 84" or your installation height from the floor.

See Installation Instructions for detailed instructions.

MONOGRAM

FLUSH INSET 3/4" PANEL DIMENSIONS

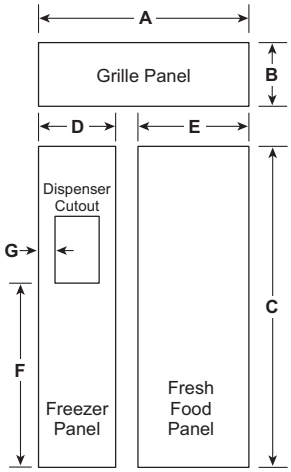

PANEL DIMENSIONS

A	B	C	D	E
50"	11 3/16"	68 5/8"	20 7/8"	28 7/8"

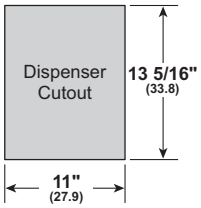

DISPENSER CUTOUT POSITION

F	G
34 9/32"	5 15/16"

3/4" RAISED DOOR PANEL ROUTING

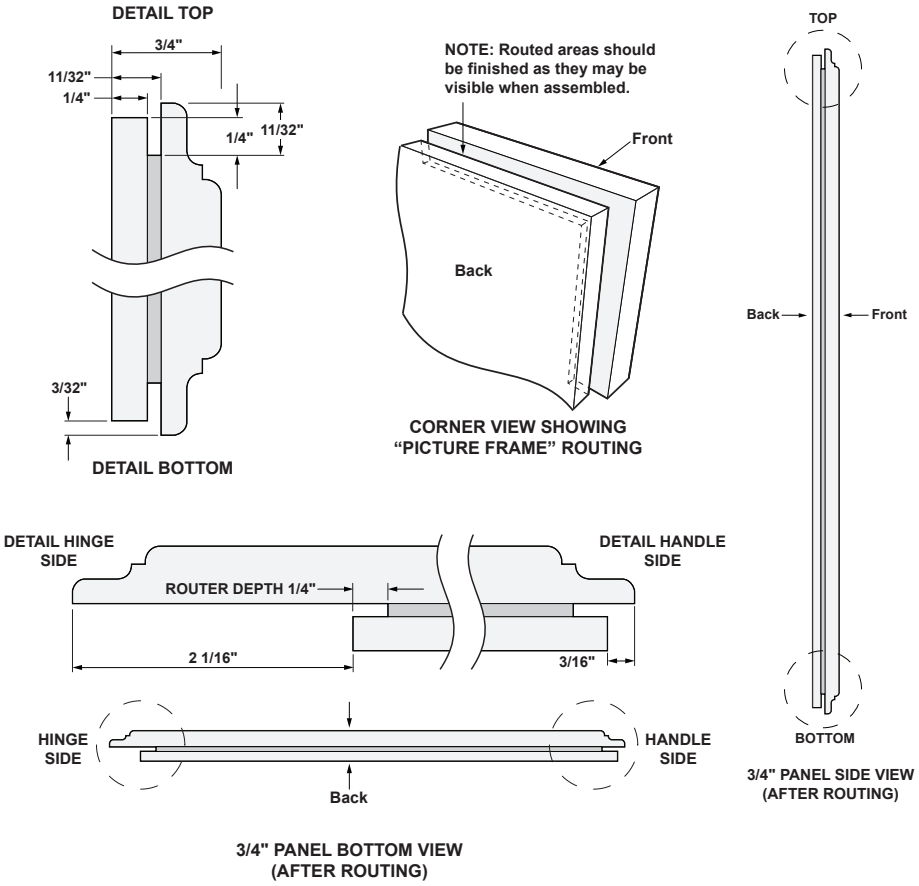

FLUSH INSET INSTALLATION

HELPFUL TIPS

Trimmed refrigerators are designed to be customized with decorative panels. Field-installed 1/2" or 3/4" custom door and grille panels are required. For 3/4" raised door and grille panels, routing is required. The router depth is 1/4" all the way around the panel's backs. Additional panel width reductions are required per the diagrams shown. This will create "picture frame" routing allowing the panels to slide into the attached door and grille trims.

MAXIMUM TOTAL PANEL WEIGHT:

- Fresh food door panels – 75 lbs.
- Freezer drawer panel – 53 lbs.
- Grille panel – 18 lbs.

DOOR HANDLES

Door handle not included. A custom handle supplied by your cabinet maker may be used.

⚠ WARNING:

Door Trim Pinch Point

Hazard Improper installation can lead to a finger pinch point hazard between the side door trim and the cabinets when operating the door, especially with children. To minimize this risk you must follow the installation instructions for cabinet dimensions, trim assembly and door stop angle.

MONOGRAM

3/4" RAISED GRILLE PANEL ROUTING

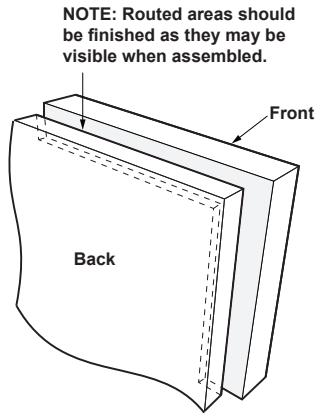

CORNER VIEW SHOWING "PICTURE FRAME" ROUTING

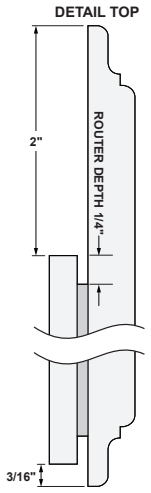

DETAIL BOTTOM

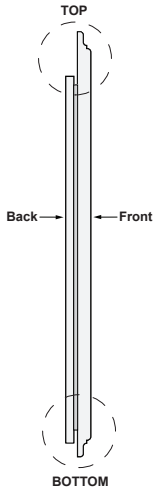

3/4" PANEL SIDE VIEW (AFTER ROUTING)

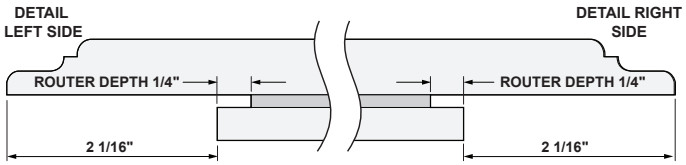

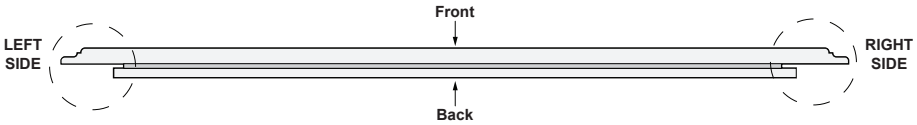

3/4" PANEL BOTTOM VIEW (AFTER ROUTING)

FLUSH INSET INSTALLATION

HELPFUL TIPS

Trimmed refrigerators are designed to be customized with decorative panels. Field-installed 1/2" or 3/4" custom door and grille panels are required. For 3/4" raised door and grille panels, routing is required. The router depth is 1/4" all the way around the panel's backs. Additional panel width reductions are required per the diagrams shown. This will create "picture frame" routing allowing the panels to slide into the attached door and grille trims.

MAXIMUM TOTAL PANEL WEIGHT:

- Fresh food door panels – 75 lbs.
- Freezer drawer panel – 53 lbs.
- Grille panel – 18 lbs.

DOOR HANDLES

Door handle not included. A custom handle supplied by your cabinet maker may be used.

MONOGRAM

DISPENSER TRIM A

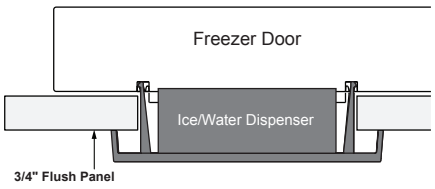

3/4" OVERLAY PANEL DISPENSER TRIM

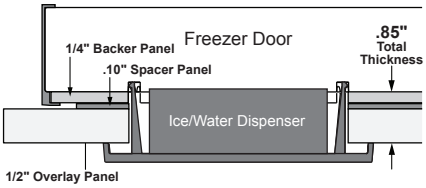

1/2" OVERLAY PANEL DISPENSER TRIM

RAISED PANEL DESIGN ON DISPENSER MODELS

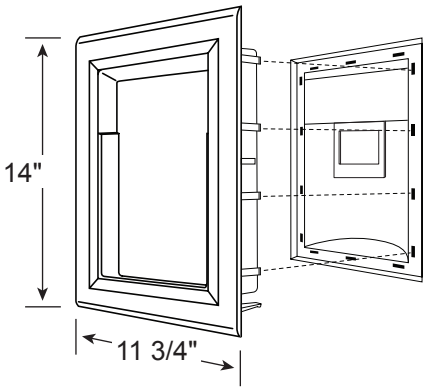

DISPENSER TRIM

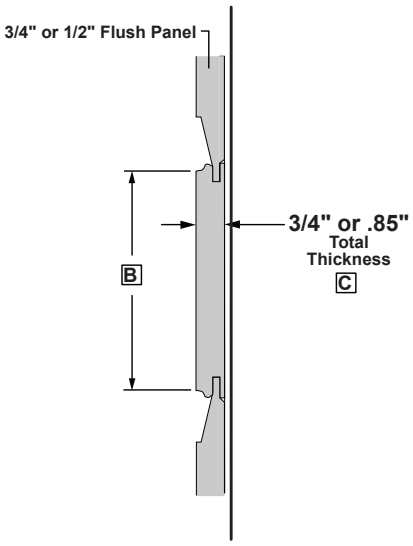

SIDE VIEW CROSS SECTION

(SHOWING RAISED PANEL WITH MIDDLE RAIL)

FLUSH INSET INSTALLATION

HELPFUL TIPS

These refrigerators are supplied with a dispenser trim for flush inset panels.

A **PANEL DISPENSER TRIM:** The provided dispenser trim is designed to fit a total panel thickness of 3/4" or 0.85".

- If the panel is less than 3/4" thick, a noticeable gap may be created around the dispenser trim.
- If the panel is more than 0.85" thick, the dispenser trim cannot be secured to the door.
- The overlay panel must be constructed according to the specifications shown to achieve the correct total thickness.
- When a raised panel design is to be used, a custom middle rail is required.

RAISED PANEL DESIGN ON DISPENSER MODELS: When a raised panel design is to be used, a custom wide middle rail is required to accept the dispenser trim.

B The middle rail must be wide enough to allow for the dispenser trim to overlap the opening.

C The middle rail must be 3/4" total thickness for 3/4" panels or 0.85" total thickness for 1/2" panels to accept the dispenser trim.

MONOGRAM

FLUSH INSET 1/2" PANEL DIMENSIONS

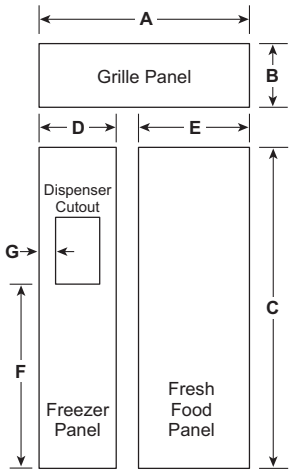

PANEL DIMENSIONS

	A	B	C	D	E
1/4" Backer Panel	45 7/8"	9 1/2"	68 3/8"	18 9/16"	26 9/16"
.10" Space Panel	45"	8 5/8"	67"	17 9/16"	25 9/16"
1/2" Overlay Panel	50"	11 3/16"	68 5/8"	20 7/8"	28 7/8"

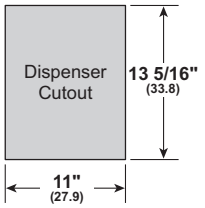

DISPENSER CUTOUT POSITION

F	G
34 5/16"	5 15/16"

1/4" BACKER ASSEMBLY ROUTING DIMENSIONS

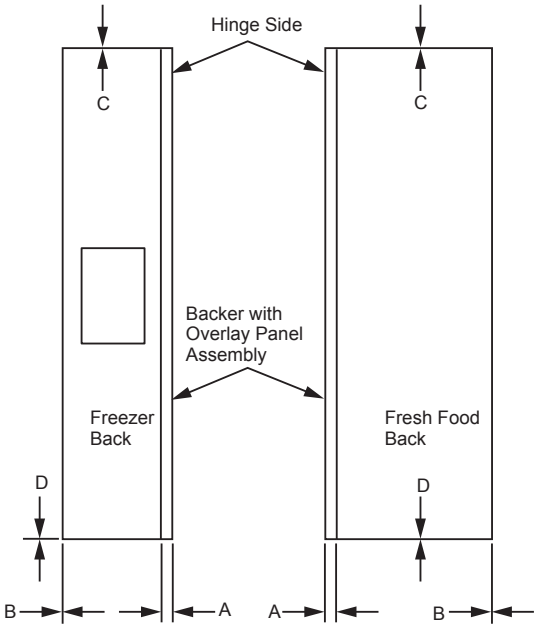

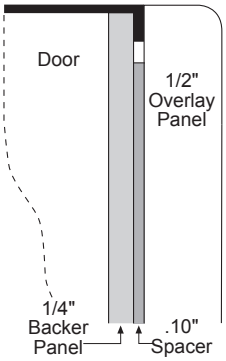

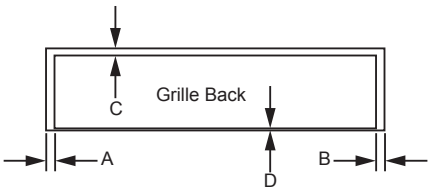

PANEL DIMENSIONS

	A	B	C	D
Fresh Food Panel	2 1/16"	1/4"	1/8"	1/8"
Freezer Panel	2 1/16"	1/4"	1/8"	1/8"
Grille Panel	2 1/16"	2 1/16"	1 15/32"	7/32"

FLUSH INSET INSTALLATION

HELPFUL TIPS

The 1/2" overlay panel must be secured to a .10" spacer panel and a 1/4" thick backer panel, which slides into the trim.

ASSEMBLE THE PANELS WITH GLUE AND SCREWS:

- Center the spacer panel on the backer panel, left to right and top to bottom. Secure the panels with glue.
- Refer to the chart for locating the backer panel to the overlay panel. Secure the overlay panel to the backer panel with glue and screws. Screws must be countersunk into the backer panel.

MAXIMUM TOTAL PANEL WEIGHT:

- Fresh food door panel – 75 lbs.
- Freezer drawer panel – 53 lbs.
- Grille panel – 18 lbs.