NOTE: CLEARANCE FOR PLUMBING AND/OR SINK BASE IS 9.60.

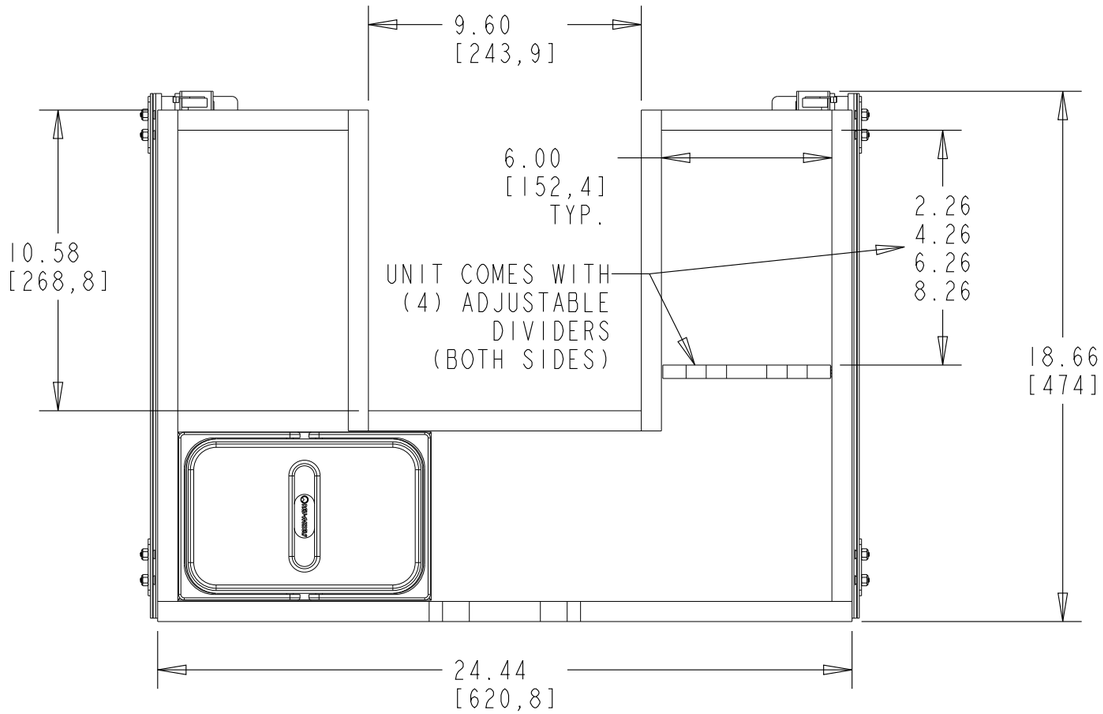


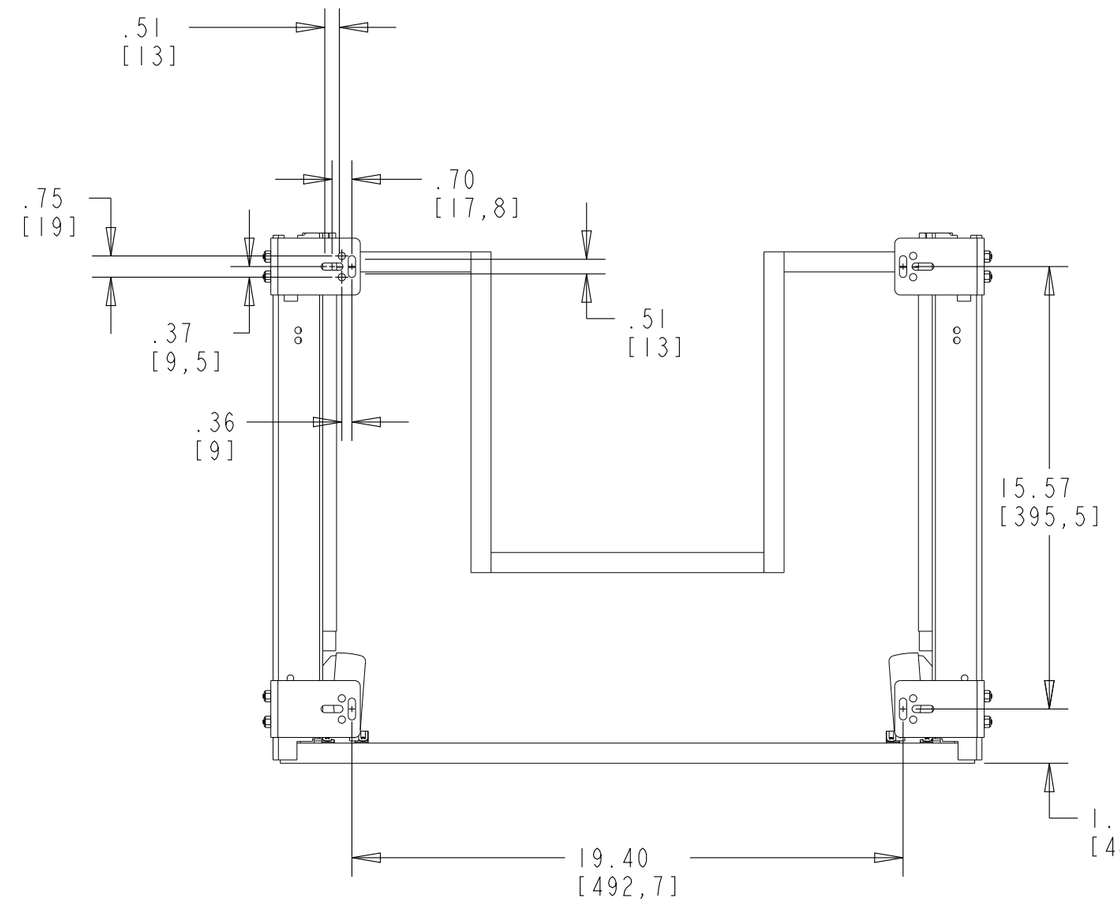


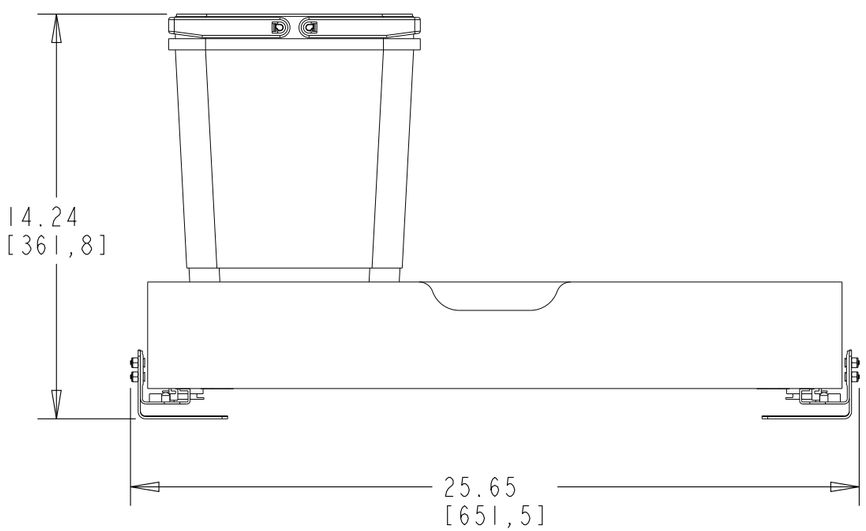


CUSTOMER DRAWING



| REV. | DATE | BY | DESCRIPTION OF CHANGE |
|---|---|---|---|
| | | | |
| | | | |
| | | | |
| | | | |

| | | | BY | DATE |
|---|---|---|---|---|
| INCH [MM] | AMERICAN PROJECTION | DRAWN | KRR | 10-2-17 |

TOLERANCES
MAT. DEC.
(WOOD) .XX ±.03 [.8mm]
(OTHER) .XX ±.02 [.5mm]
(ALL) .XXX ±.005 [.13 mm]
FRACTIONS ±1/32 [.8 mm]
ANGLES ±1/2°

REV-A-SHELF®, INC.

SIZE B — VANITY 30" U-SHAPED BASKET WITH WASTE CAN BOTTOM MOUNT

MATERIAL

FINISH

DRAWING NO. 486-30VSBSC-BM-1

SCALE 0.188

PART NO. 486-30VSBSC-BM-1

SHEET 1 OF 2

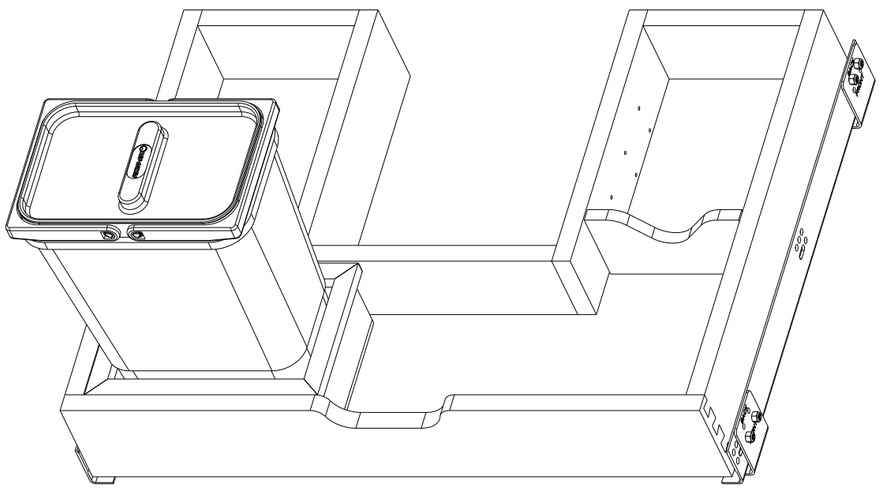

| PART DIMENSIONS | | |
|---|---|---|
| | MIN | MAX |
| WIDTH | 25.65 | |
| DEPTH | 18.66 | |
| HEIGHT | 14.24 | |
| WEIGHT | | |
| DIAMETER | | |
| RADIUS | | |
| CONTAINTER CAPACITY | 8 | |
| CONTAINER UOM | LITER | |

| MIN CABINET OPENING | | | | |
|---|---|---|---|---|
| | FACE FRAME | FRAMELESS | INSET FACE FRAME | INSET FRAMELESS |
| WIDTH | 25.00 | 25.75 | 25.00 | 25.75 |
| DEPTH | 18.75 | 18.75 | 19.50 | 19.50 |
| HEIGHT | 14.50 | 14.50 | 14.50 | 14.50 |

| SLIDE SPECIFICATIONS | | | | |
|---|---|---|---|---|
| SLIDE TYPE | BLUM UNDERMOUNT | SLIDE EXTENSION | FULL EXTENSION | MAX WEIGHT RATING |
| SLIDE CLOSING | SOFT | SLIDE LENGTH | 18.00 [457MM] | |
| SLIDE MOUNTING | BOTTOM | SLIDE FINISH | ZINC | 100 LB |

CUSTOMER DRAWING



| REV. | DATE | BY | DESCRIPTION OF CHANGE |
|---|---|---|---|
| | | | |
| | | | |
| | | | |
| | | | |

INCH [MM] — AMERICAN PROJECTION

| | BY | DATE |
|---|---|---|
| DRAWN | KRR | 10-2-17 |

REV-A-SHELF®, INC.

SIZE B — VANITY 30" U-SHAPED BASKET WITH WASTE CAN BOTTOM MOUNT

TOLERANCES
MAT. DEC.
(WOOD) .XX ±.03 [.8mm]
(OTHER) .XX ±.02 [.5mm]
(ALL) .XXX ±.005 [.13 mm]
FRACTIONS ±1/32 [.8 mm]
ANGLES ±1/2°

MATERIAL

FINISH

DRAWING NO. 486-30VSBSC-BM-1

SCALE 0.188

PART NO. 486-30VSBSC-BM-1

SHEET 2 OF 2