KALLISTA®

Script® by KALLISTA
Console Table Top
P74243-00

Features
- Constructed of marble
- With knock-out holes for 8" (203 mm) widespread sink faucet or single control sink faucet option
- 32-1/2" (826 mm) total width
- 22-7/16" (570 mm) total length
- 1-3/16" (30 mm) total height
- Required console legs (P77618-00) sold separately
- Pairs with P74241-WO-0 under-mount sink

Required Products/Accessories
P74241-WO Under-mount Sink, Soft Oval with Overflow, Glazed

or

P74242-CP Console Table Leg

or

P74242-BV Console Table Leg w/Brushed Bronze Accent

or

P74242-SN Console table leg

Recommended Products/Accessories
P25051-SLC Sink faucet, arch spout, clear crystal knob handles
P25006-CR Script Sink Faucet, Low Spout, Cross Handles
P25013-00 Towel Ring

Codes/Standards
None Applicable

KALLISTA® Five-Year Limited Warranty
See website for detailed warranty information.

Available Colors/Finishes
Color tiles intended for reference only.

Color	Code	Description
	BWM	Bering White Marble

KALLISTA®

Script® by KALLISTA
Console Table Top
P74243-00

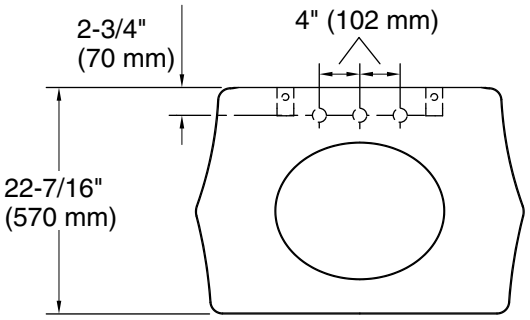

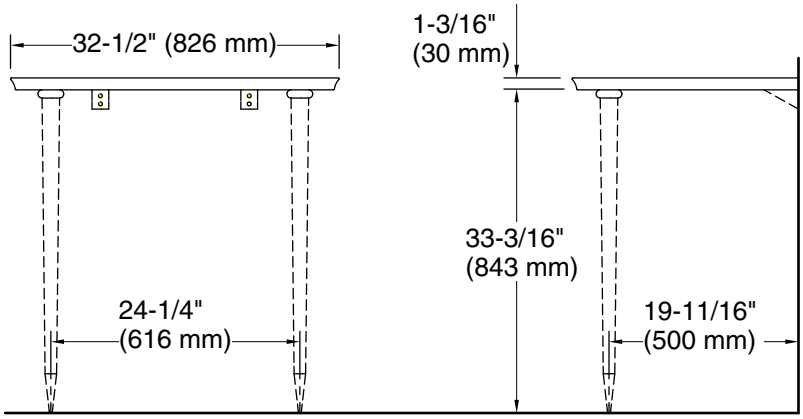

Technical Information
All product dimensions are nominal.

Basin configuration:	Single Bowl
Bowl area:	Length: 16-5/8" (423 mm) Width: 13-7/16" (342 mm)

Notes
Install this product according to the installation instructions.