REVISIONS					
REV.	ZONE	DESCRIPTION	DATE	NAME	ECO
1		INITIAL RELEASE	23-DEC-24		

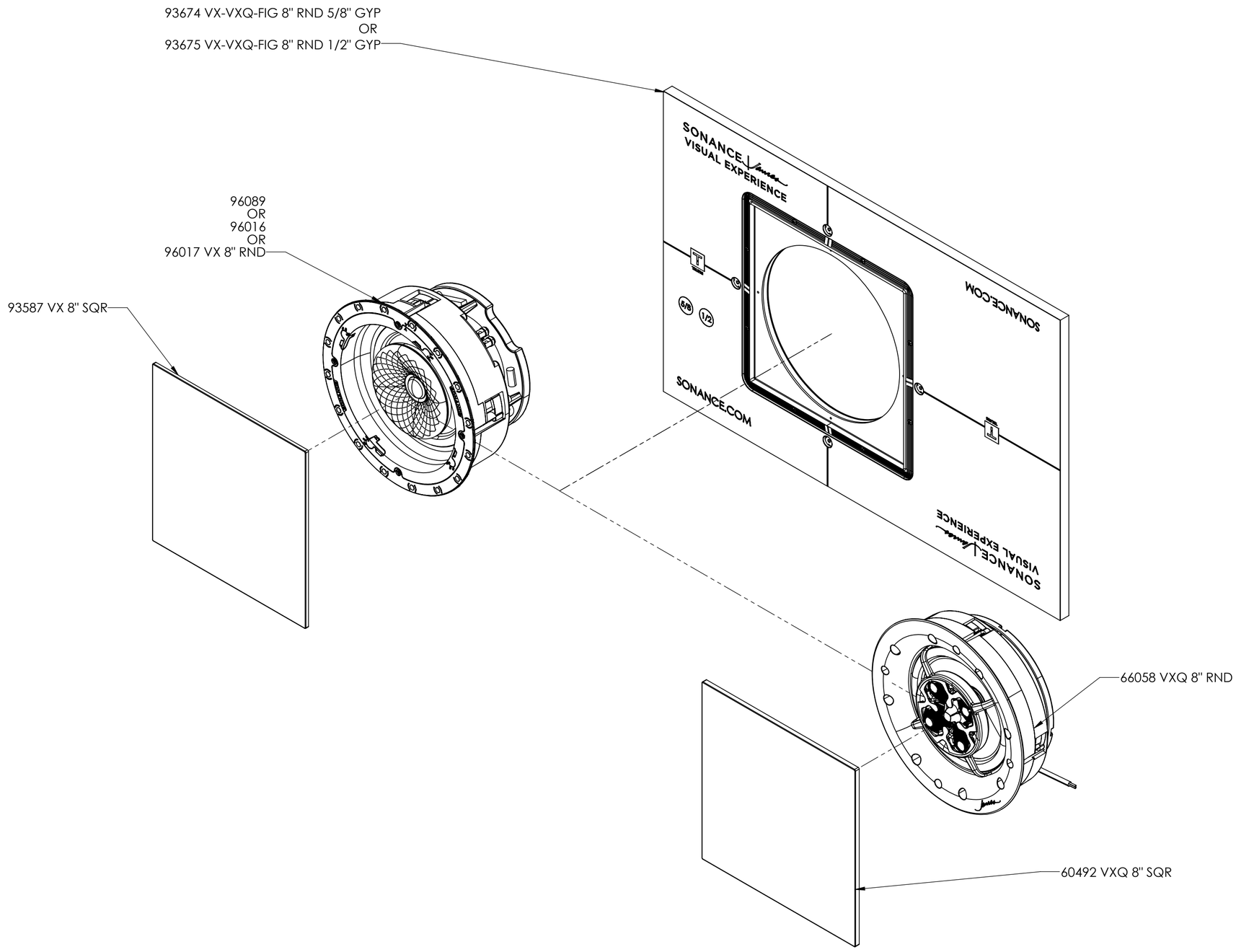

TRUFIG GYP MOUNTING PLATFORM VX-VXQ 8 INCH SQR ASSEMBLY

REV. 1

DRAWN - PART NUMBER C

SCALE: 1:4

DRAWN BY:AB

SHEET 1 OF 1

RELEASED ON: 22 OCT 24

TRUFIG
991 CALLE AMANECER, SAN CLEMENTE CA. 92673
WWW.TRUFIG.COM

FILE NAME: TRUFIG GYP MOUNTING PLATFORM VX-VXQ 8 INCH SQR ASSY