KINGSTON

TO ORDER PARTS, CALL: 1-877-252-7277
www.kingstonbrass.com

CC2160,1,2,3,5,7,8

Soap & Sponge Holder

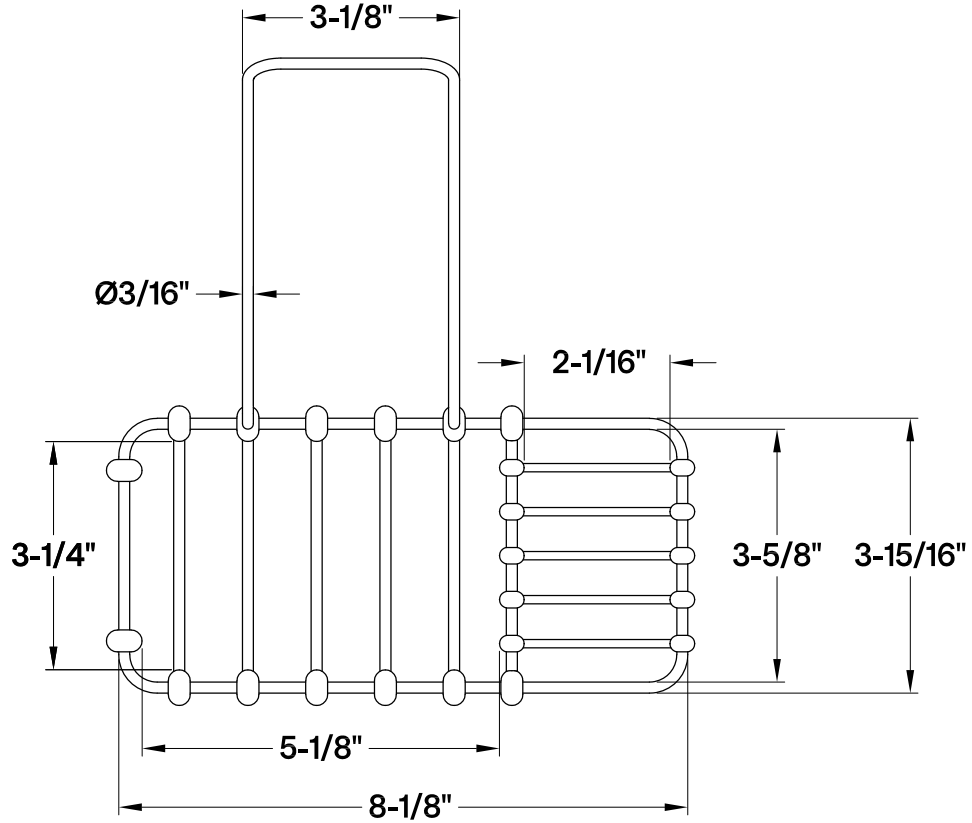

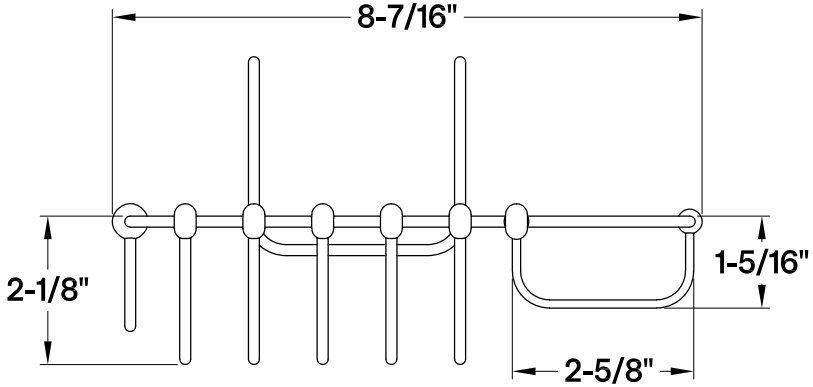

+

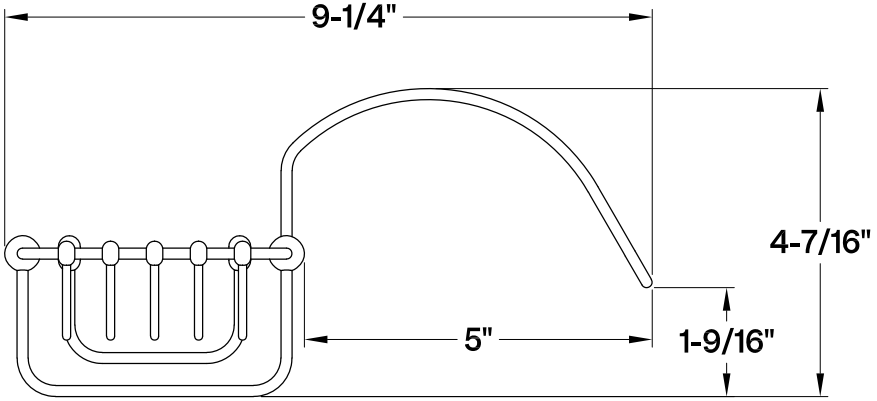

2025-11-A