PRODUCT	W1	TOP DRAWER SIZE	2 DRAWER SIZE
		ROUNDED TO THE NEAREST 1/32	
DB12-3	12"	9 31/32" X 5 23/32"	9 31/32" X 10 5/32"
DB15-3	15"	12 31/32" X 5 23/32"	12 31/32" X 10 5/32"
DB18-3	18"	15 31/32" X 5 23/32"	15 31/32" X 10 5/32"
DB21-3	21"	18 31/32" X 5 23/32"	18 31/32" X 10 5/32"

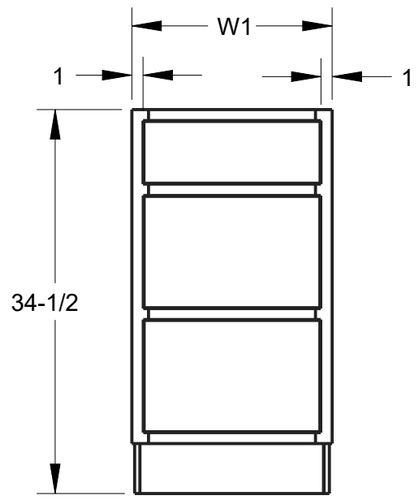

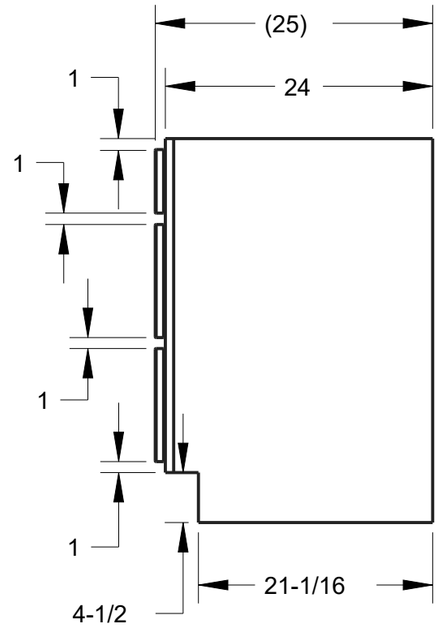

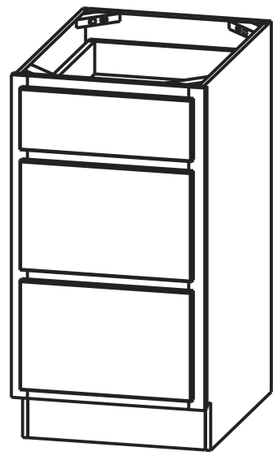

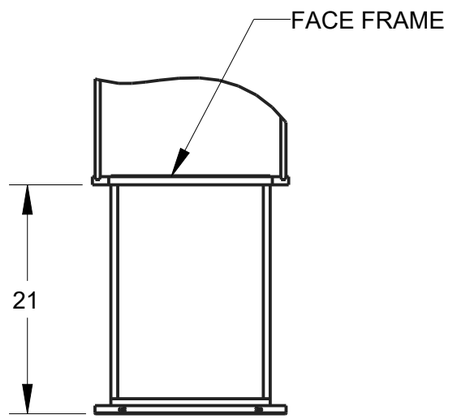

OPEN DRAWER

PRODUCT SHOWN B18

DOCUMENT STATUS	**Released**

THIRD ANGLE PROJECTION

MATERIAL	FINISH
N/A	N/A
DRAWN BY ANDY BROWN	DATE 22FEB2021
DESIGNED BY NORTHPOINT	DATE
APPROVED BY E. GOLSTANYAN	DATE 26MAR2021

hardware resources

DESCRIPTION

DB12-DB15DB18DB21-3 DRAWER HALF OVERLAY

DRAWING NUMBER	REV
DB12-DB15DB18DB21-3_DRAWER_HALF	A

SIZE	SCALE	SHEET
A3	0.071	1 / 1

HARDWARE RESOURCES RESERVES THE RIGHT TO CHANGE SPECIFICATIONS WITHOUT NOTICE.
IN CASE OF A DISCREPENCY, ACTUAL PART GEOMETRY SUPERSEDES THIS DOCUMENT.

THE INFORMATION CONTAINED WITHIN THIS DRAWING IS THE SOLE PROPERTY OF HARDWARE RESOURCES INC. ANY REPRODUCTION IN PART OR WHOLE WITHOUT WRITTEN PERMISSION OF HARDWARE RESOURCES INC. IS PROHIBITED.