HARRISON EXTRA LARGE RADIATOR COVER ASSEMBLY INSTRUCTIONS

Thank you for purchasing the HARRISON EXTRA LARGE RADIATOR COVER .Please read the instructions carefully to ensure safe operation of the product.

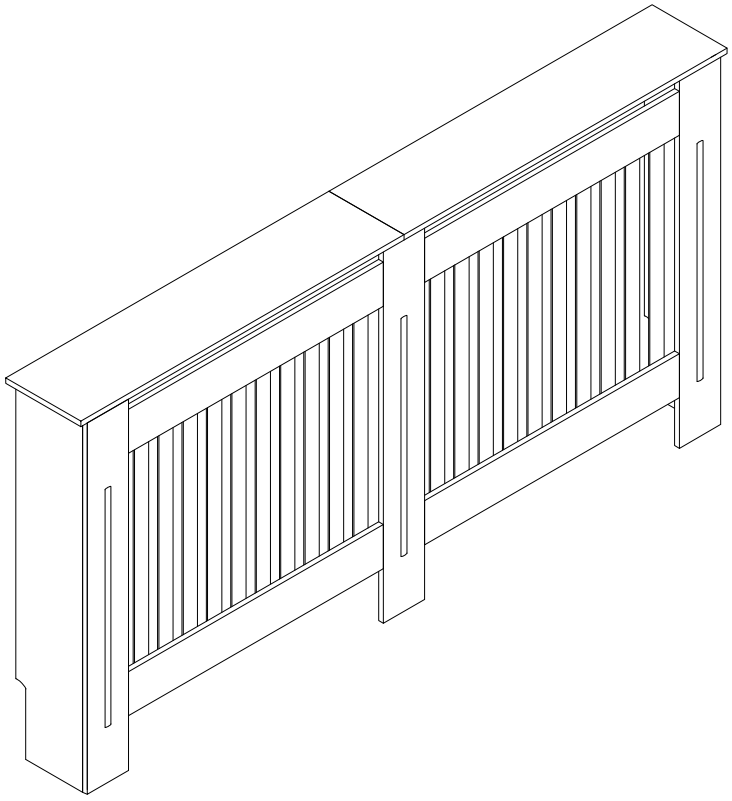

Size: L172xW19xH83cm

PLEASE READ this sheet prior to assembly to familiarise yourself with the various stages of construction.

Carefully open the pack supplied and check the contents against the parts and fittings check list. Do not destroy any of the packaging until you are certain that you have all the necessary parts for the assembly.

CAUTION : There are small components used in the construction of this unit. These loose items should be kept away from young children whilst assembling your unit to avoid the danger of choking hazards.

Tools Required



HARRISON EXTRA LARGE RADIATOR COVER ASSEMBLY INSTRUCTIONS

Refer to the dimension image for your selected radiator cover to check that it will fit.

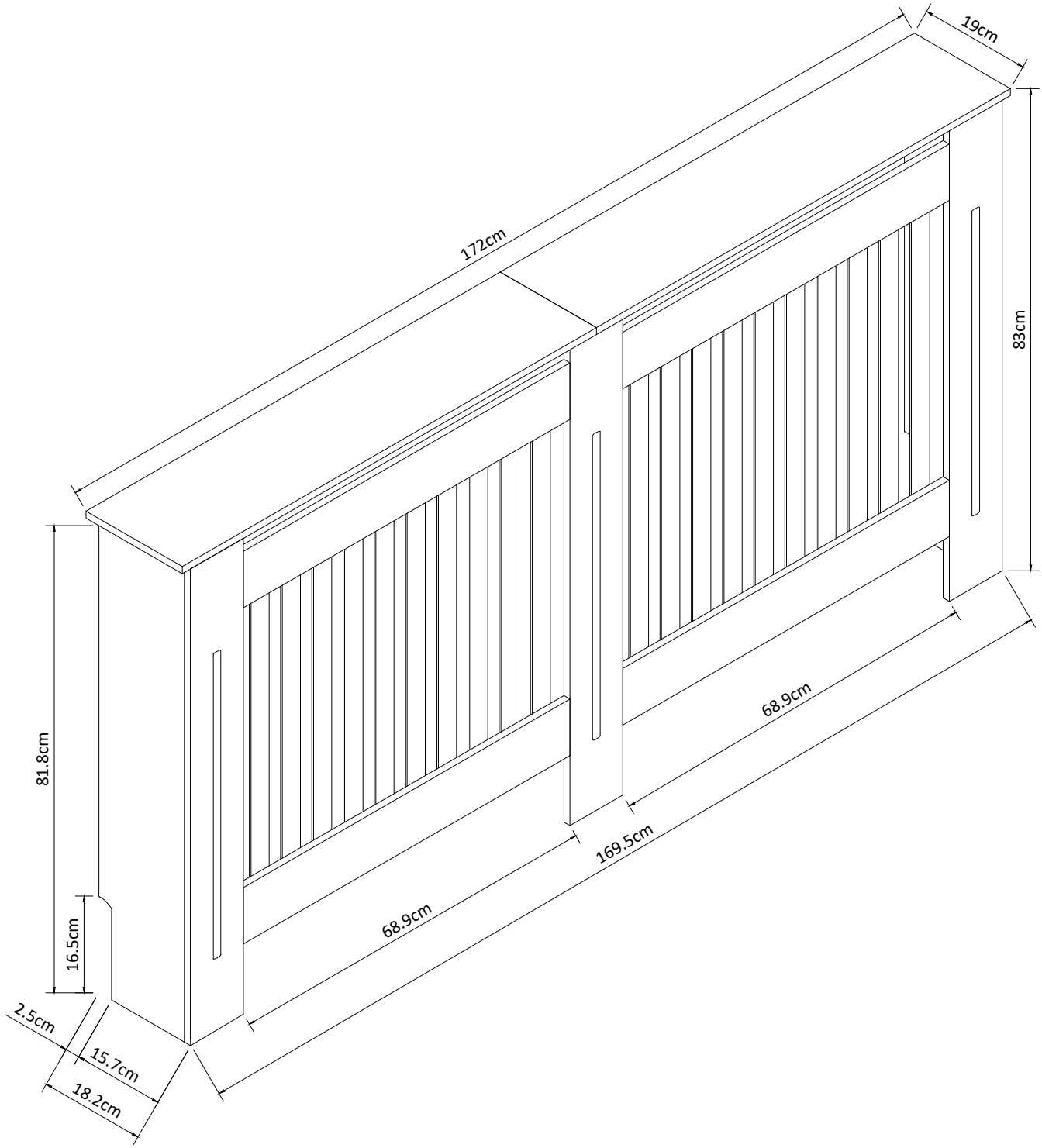

IMPORTANT - READ CAREFULLY - RETAIN THESE INSTRUCTIONS FOR FUTURE REFERENCE.

INFORMATION

This product is designed to hold a combined weight of 5KG across the whole top. Do not exceed this weight.

Due to the size of this product we recommend that it is assembled in the room intended for use.
When you are ready to start, make sure that you have the right tools, plenty of space and a clean, dry area for assembly.
Unwrap all packaging materials and place the components on top of the carton box or on a clean floor to prevent it from scratching.
Check the pack and make sure you have all the parts listed .
Ensure that this product is fully assembled as illustrated before use.
Check all screws or bolts are tightened and inspect regularly.
This product should only be used on firm, level ground.
Keep small parts out of reach of children.
Make sure the legs remain in contact with the ground.
Tools not included.

WARNINGS

DO NOT use power tools to construct this product.
DO NOT over tighten screws or bolts.
DO NOT use this product if parts are missing, damaged or worn.
DO NOT stand on the product.
DO NOT place very hot or very cold items on the surface unless adequately thick table mats are use to prevent such items damaging your table top.
We recommend the use of the wall brackets provided for safety reasons.
The wall plugs provided are for a solid wall only. Suitable fixings for your wall type must be obtained separately.
If in doubt please consult a qualified trade person.
Always ensure the area to be drilled is free from hidden electrical wires, water and gas pipes.

CARE INFORMATION

Never use scourers, abrasives or chemical cleaners.

To clean wipe with a sponge and warm soapy water. Do not use solvent based cleaners or detergents as they can bleach or damage the product.

HARRISON EXTRA LARGE RADIATOR COVER ASSEMBLY INSTRUCTIONS

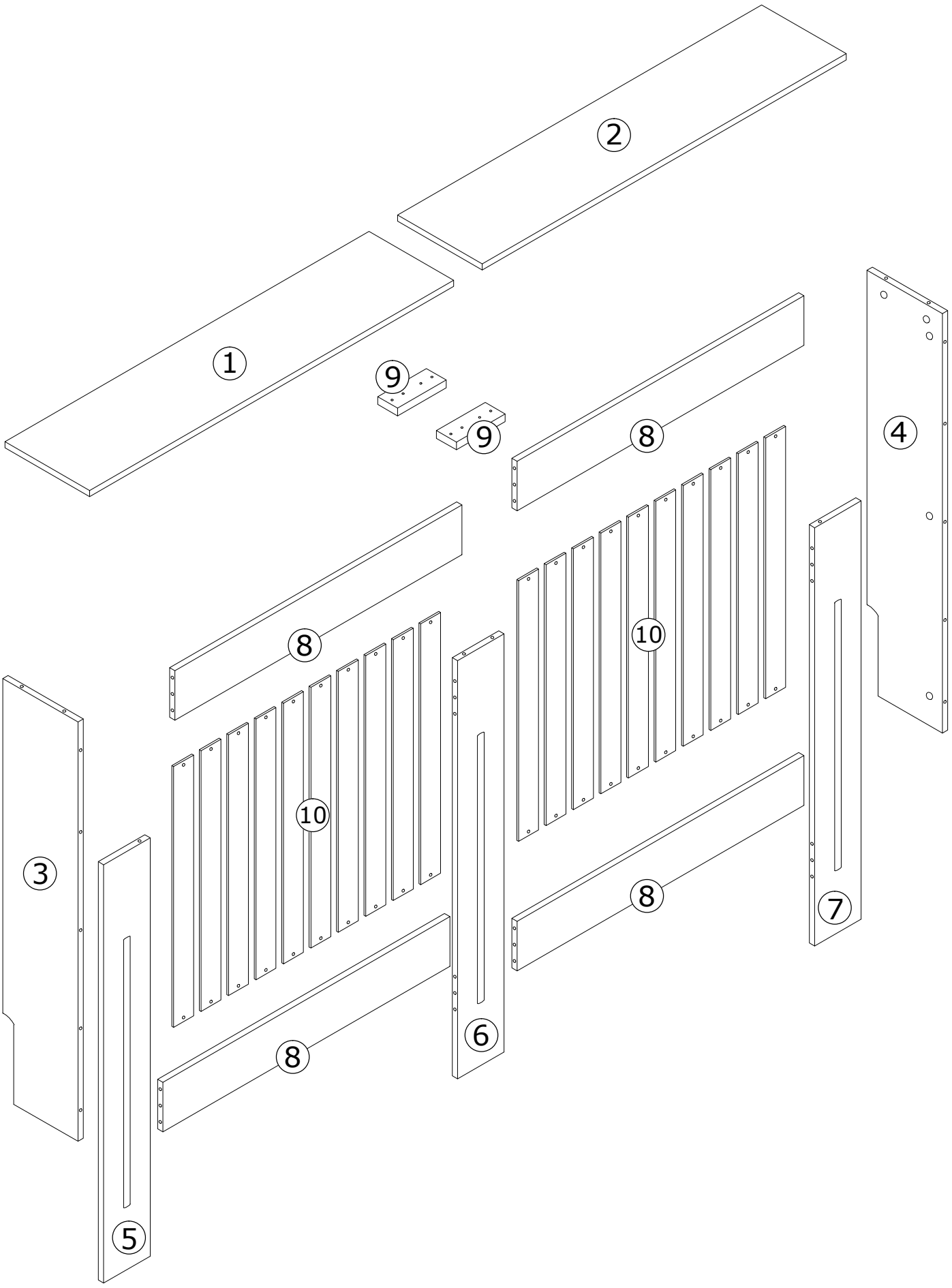

Parts

① 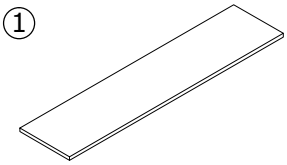	② 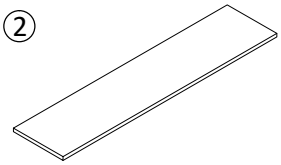	③ 	④ 
Description:Cover Top Shelf Qty: 1PC	Description:Cover Top Shelf Qty: 1PC	Description:Left side panel Qty: 1PC	Description:Right side panel Qty: 1PC
⑤ 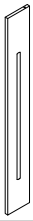	⑥ 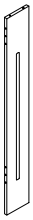	⑦ 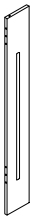	⑧ 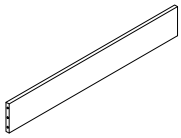
Description:LH Vertical Panel Qty: 1PC	Description:Middle Vertical Qty: 1PC	Description:RH Vertical Panel Qty: 1PC	Description:Support rail Qty: 4PCS
⑨ 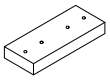	⑩ 		
Description:Block Qty: 2PCS	Description:Front slat Qty: 20PCS		

Fittings(to scale)

Ref	Dimensions	Qty
A	Cam bolt（6x35mm）	22
B	Cam（15x10mm）	22
C	Wood dowel（6x30mm）	20
D	Screw（5x14 mm）	40
E	Screw（4x18 mm）	8
F	Screw（4x40 mm）	4

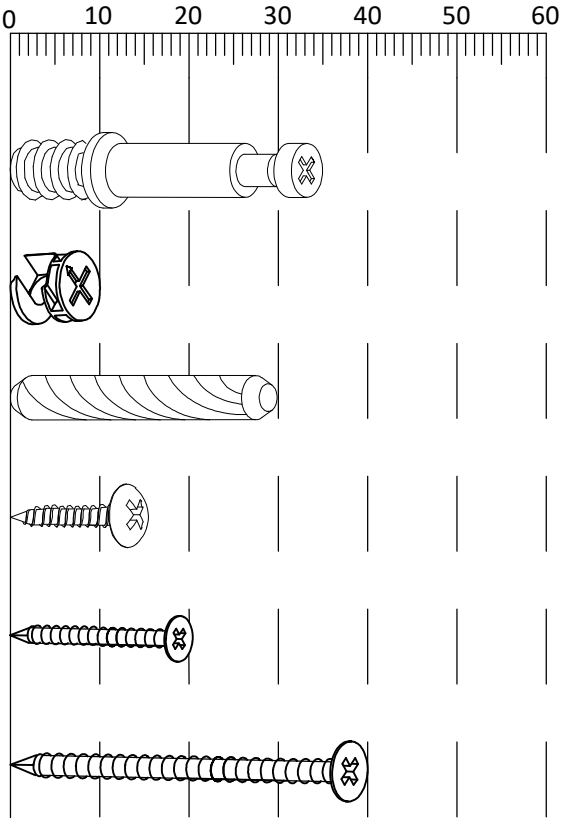

(Not to scale)

G	Wall plug	4
H	Wall Bracket	2

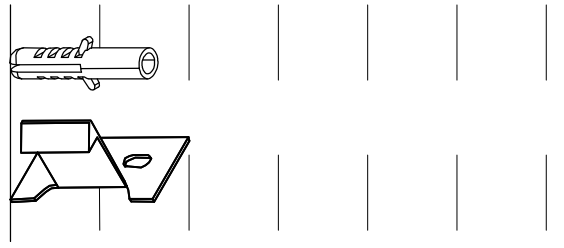

Layout Parts on Soft Surface

Lay out all parts on a soft surface i.e. Rug, Carpet or Packaging Carton

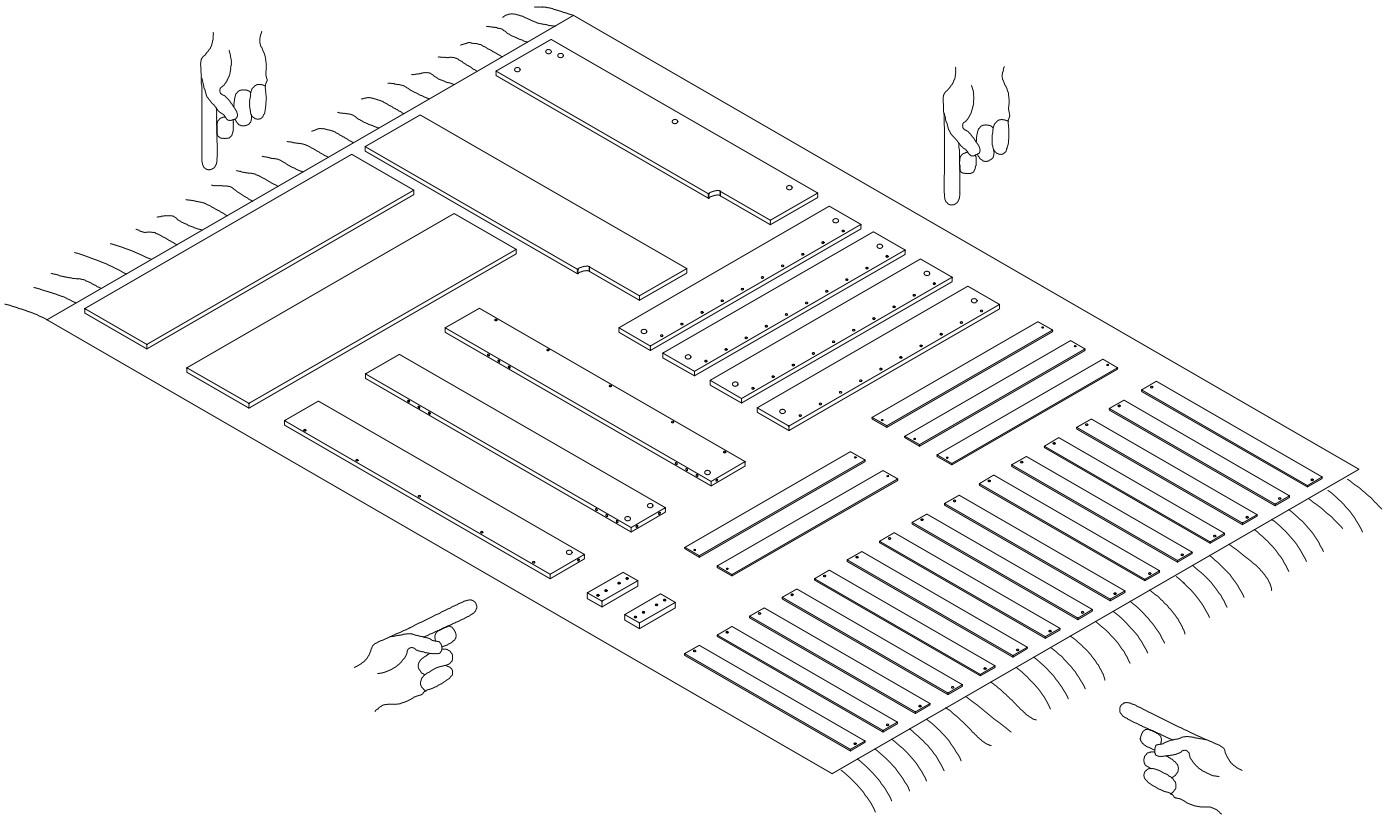

CAUTION:There are many small components used in the construction of this product.
Please keep these components away from young children whilst assembling this product.
If you keep the fittings in a bowl during assembly you will be less likely to lose them!

HARRISON EXTRA LARGE RADIATOR COVER ASSEMBLY INSTRUCTIONS

STEP 1

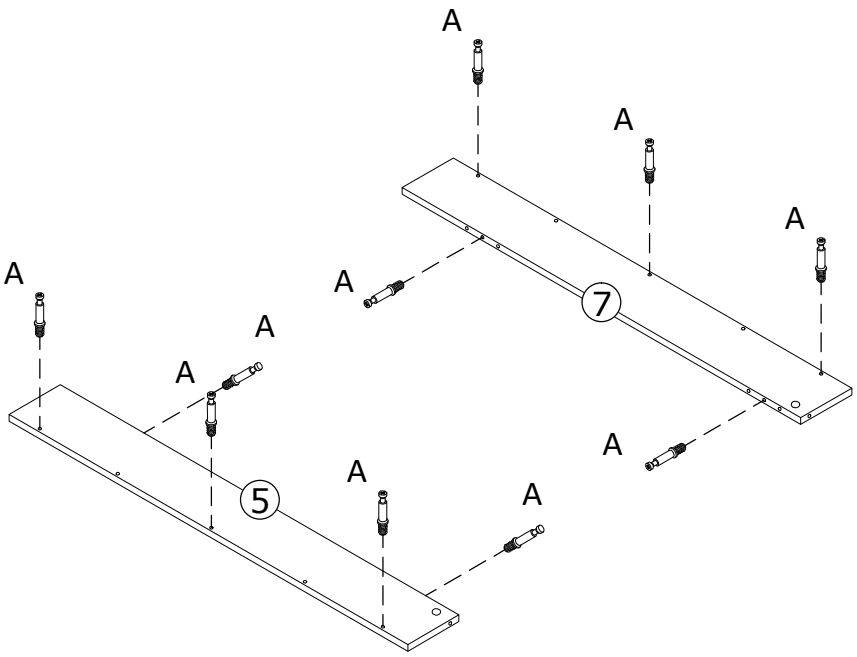

Parts Required

⑤ LH Vertical Panel ×1

⑦ RH Vertical Panel ×1

A Cam bolt（6x35mm）×10

STEP 2

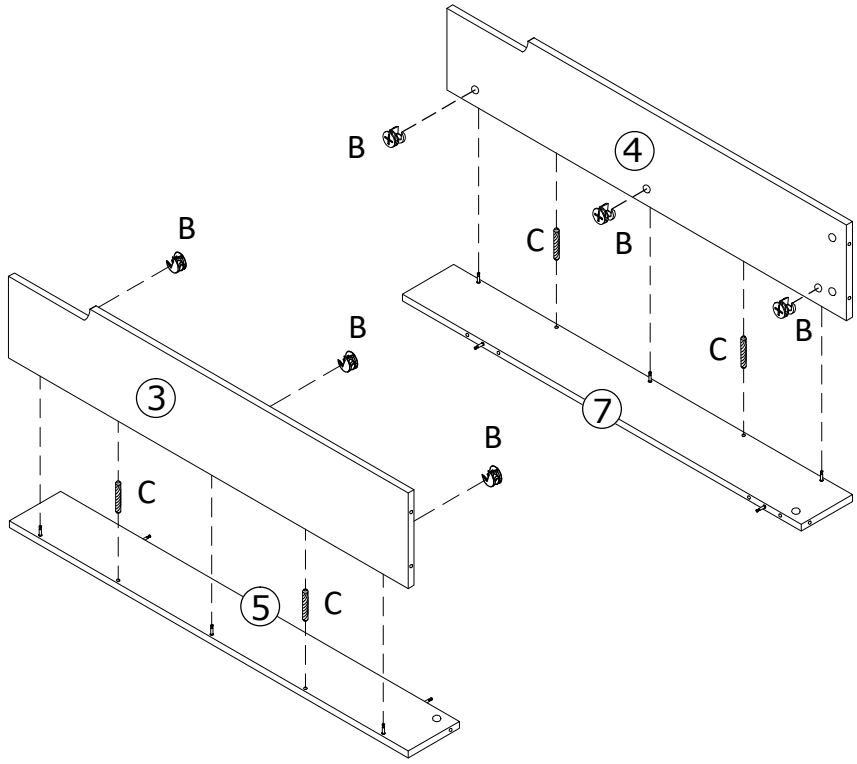

Parts Required

③ Left side panel ×1

④ Right side panel×1

⑤ LH Vertical Panel ×1

⑦ RH Vertical Panel ×1

B Cam（15x10mm）×6

C Wood dowel（6x30mm）×4

STEP 3

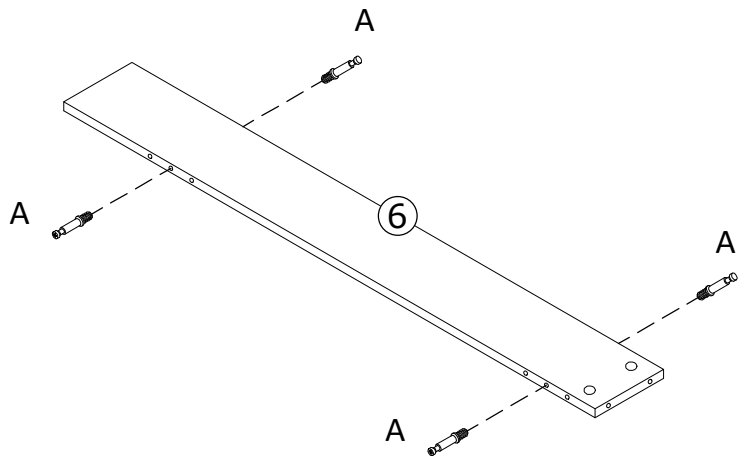

Parts Required

⑥ Middle Vertical Panel ×1

A Cam bolt（6x35mm）×4

STEP 4

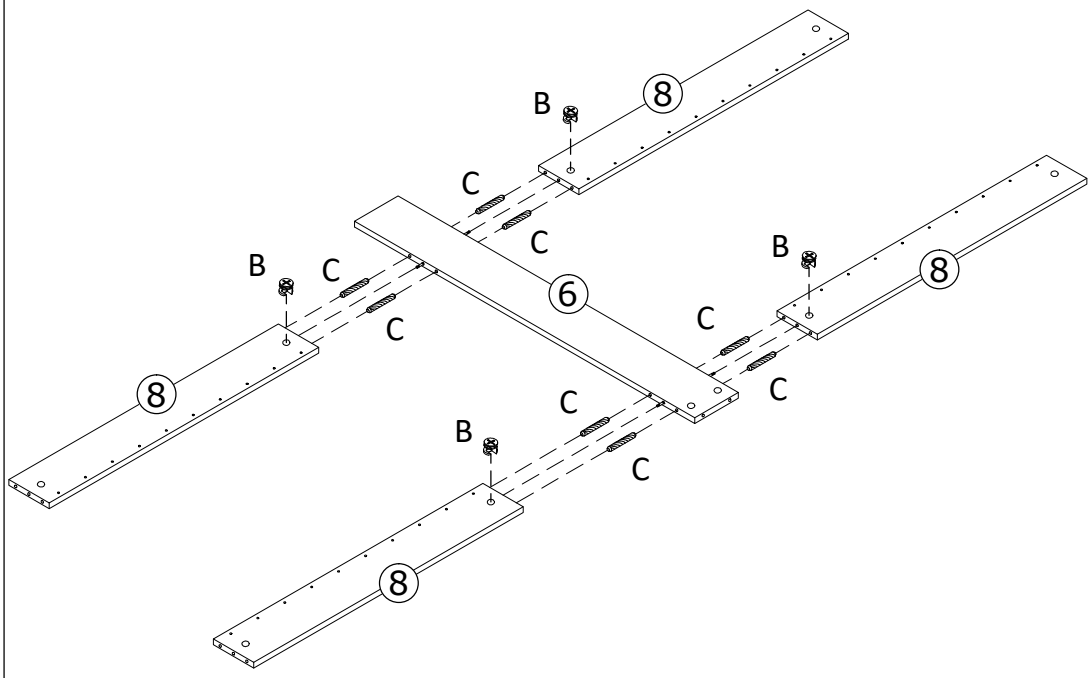

Parts Required

⑥ Middle Vertical Panel ×1

⑧ Support rail ×4

B Cam（15x10mm）×4

C Wood dowel（6x30mm）×8

STEP 5

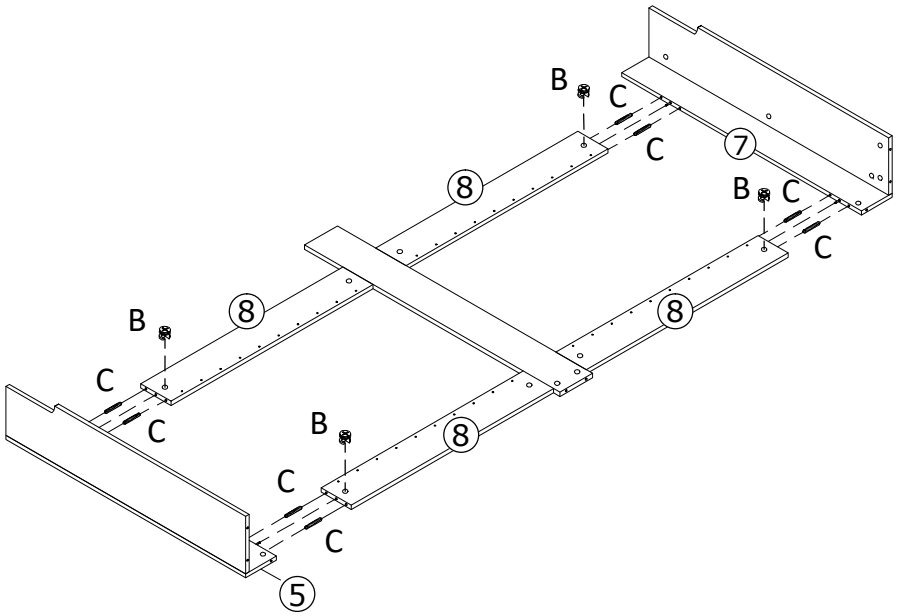

Parts Required

⑤ LH Vertical Panel ×1

⑦ RH Vertical Panel ×1

⑧ Support rail ×4

B Cam（15x10mm）×4

C Wood dowel（6x30mm）×8

STEP 6

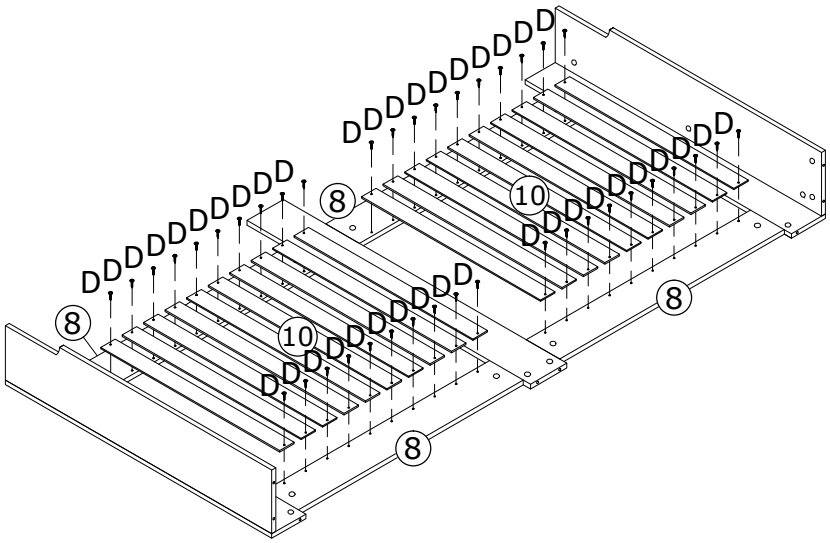

Parts Required

⑧ Support rail ×4

⑩ Front slat ×20

D Screw（5x14mm）×40

STEP 7

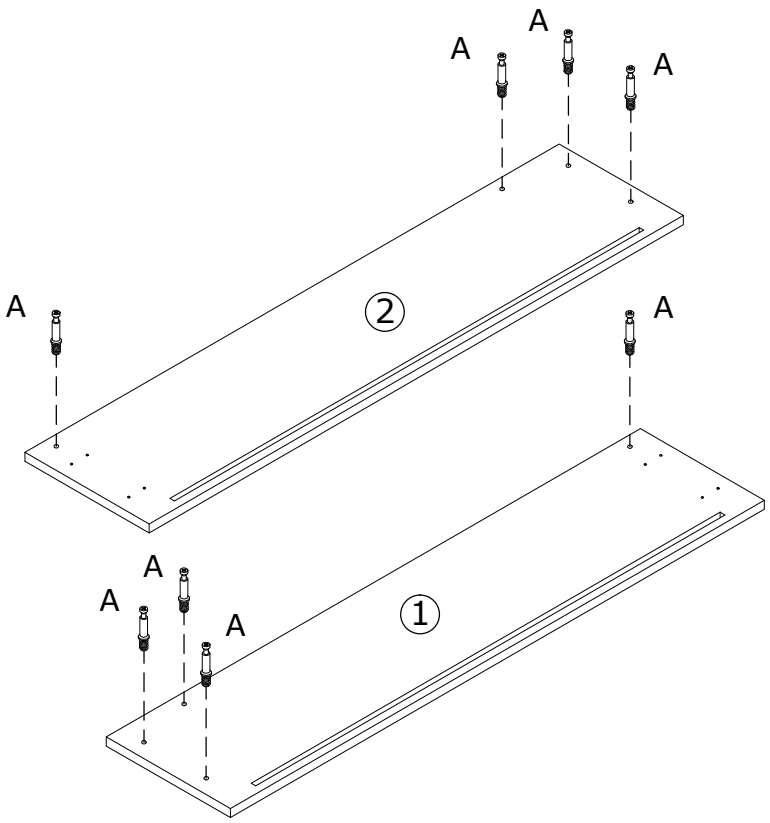

Parts Required

① Cover Top Shelf ×1

② Cover Top Shelf ×1

A Cam bolt（6x35mm）×8

STEP 8

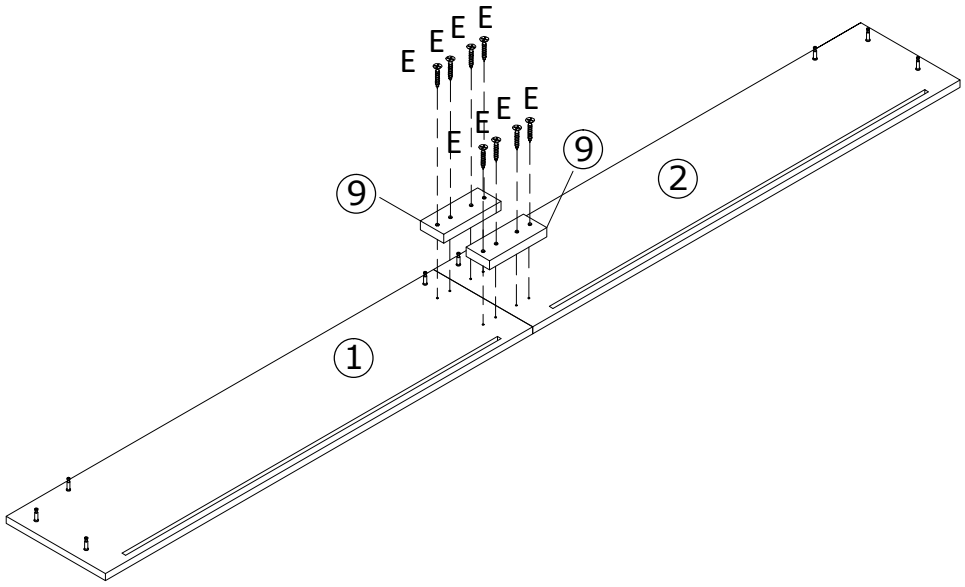

Parts Required

① Cover Top Shelf ×1

② Cover Top Shelf ×1

⑨ Block ×2

E Screw（4x18mm）×8

HARRISON EXTRA LARGE RADIATOR COVER ASSEMBLY INSTRUCTIONS

STEP 9

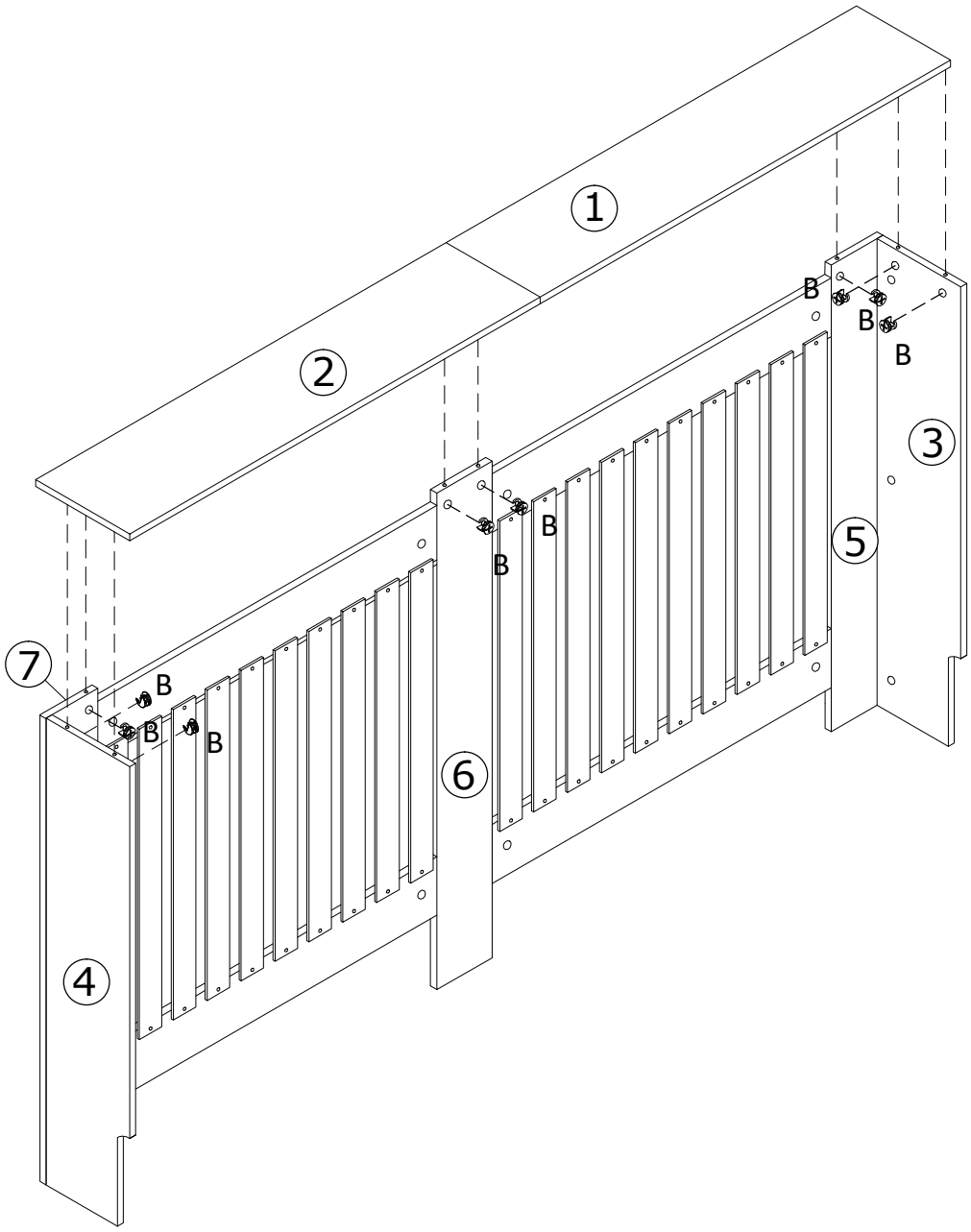

Parts Required

① Cover Top Shelf ×1
② Cover Top Shelf ×1
③ Left side panel ×1
④ Right side panel×1
⑤ LH Vertical Panel ×1
⑥ Middle Vertical Panel ×1
⑦ RH Vertical Panel ×1

B Cam（15x10mm）×8

STEP 10

Position the radiator cover against the wall that it will be fastened to and using a pencil,mark the position of the screw holes onto the wall.

Drill where the holes have been marked and insert the wall plugs, ensuring the the edge is flush with the surface of the wall.

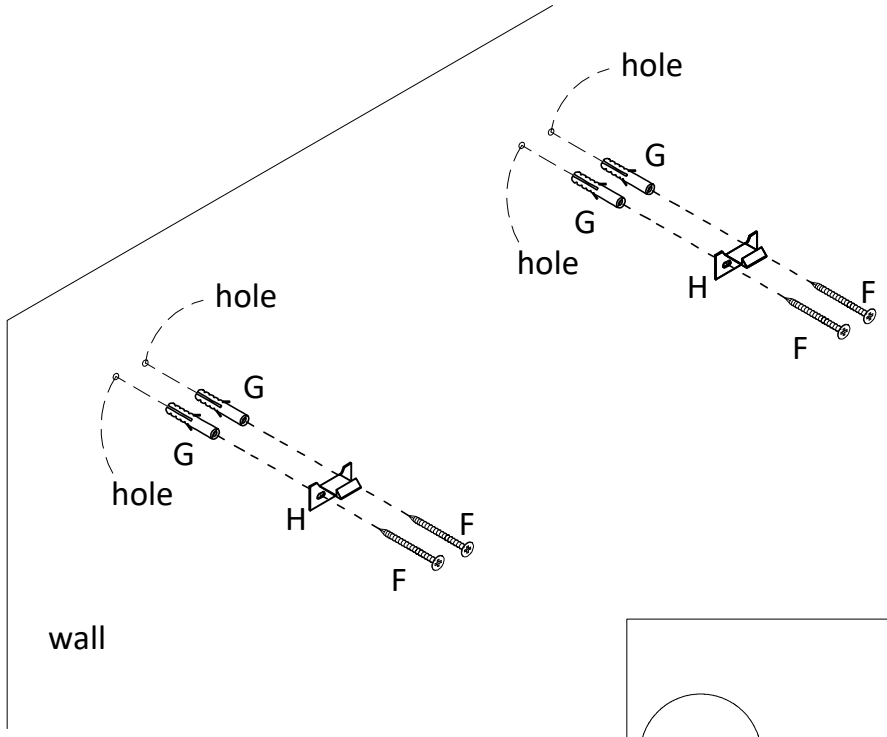

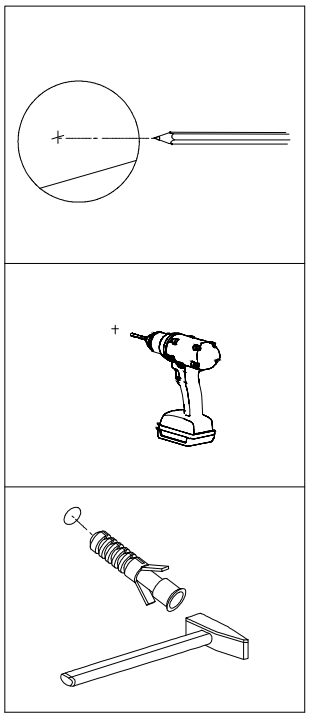

Wall fixing dimensions

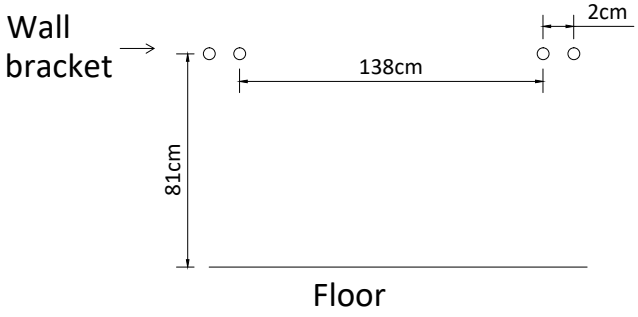

Parts Required

F Screw（4x40mm）×4

G Wall plug ×4

H Wall Bracket ×2

HARRISON EXTRA LARGE RADIATOR COVER ASSEMBLY INSTRUCTIONS

STEP 11	Parts Required
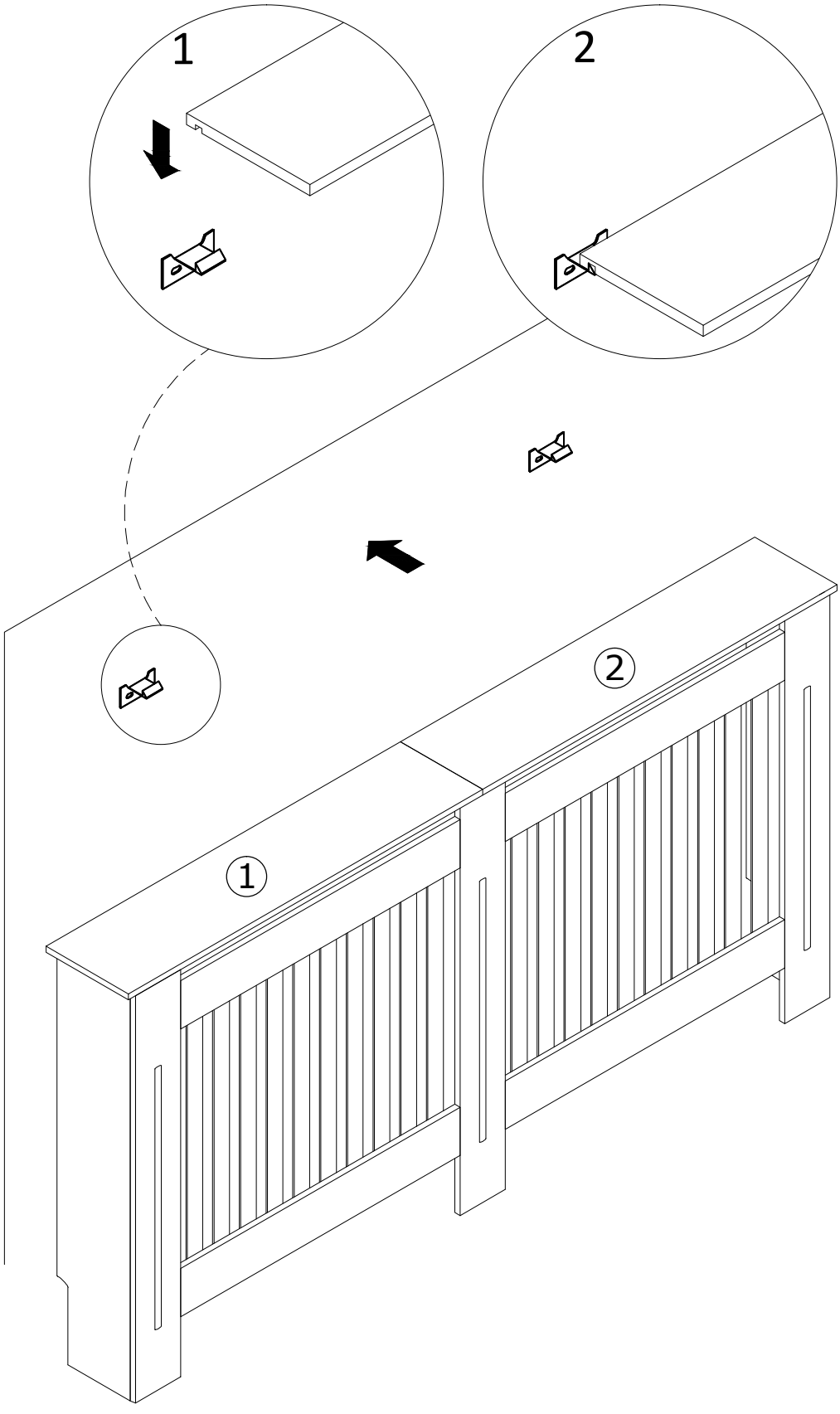	① Cover Top Shelf ×1 ② Cover Top Shelf ×1

HARRISON EXTRA LARGE RADIATOR COVER ASSEMBLY INSTRUCTIONS

Complete Assembly

Your HARRISON EXTRA LARGE RADIATOR COVER is now completely assembled.
Periodically check to ensure that the components are in their proper position and free from damage.
Also make sure the connectors are tight and secure.

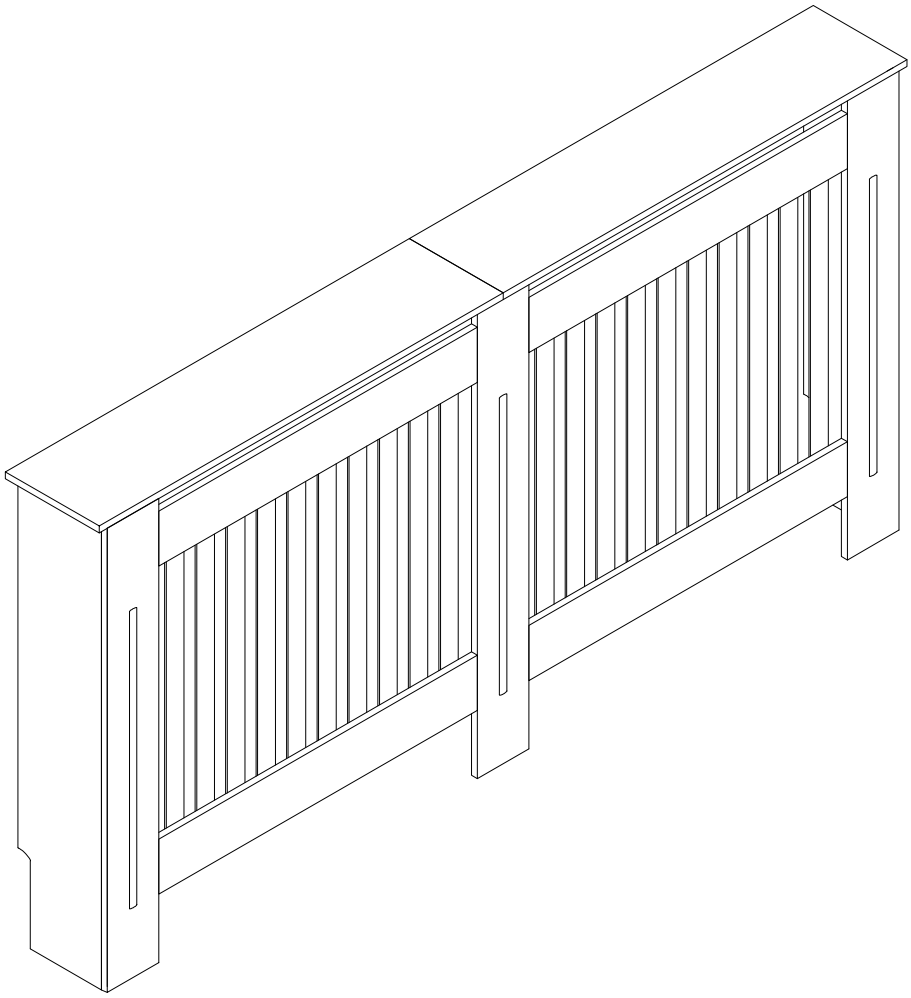

Keep instructions for future reference.

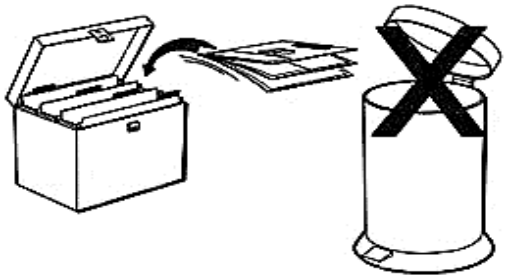

Supplied by : GFW THE FURNITURE WAREHOUSE
Waterside Distribution Centre
Waterside Business Park
Johnson Road
Lancashire
BB3 3RT
Represented by:
Authorised Rep Compliance Ltd 71
Lower Baggot Street
Dublin
D02 P593
Ireland
www.arccompliance.com