Twist-Lock® Devices

50A, 125/250V, 3 Pole, 4 Wire Grounding

Flanged Inlet

HUBBELL

Features

- Metallic flanged casing provides maximum strength and protection
- Thermoset interior provides superior heat resistance

Ordering Information

Description	Device Style	UPC	Catalog Number
PBT housing and flange	Gray	783585369594	**HBL6375S**

Listings

Listed to UL 498
Certified to CSA C22.2 No.42

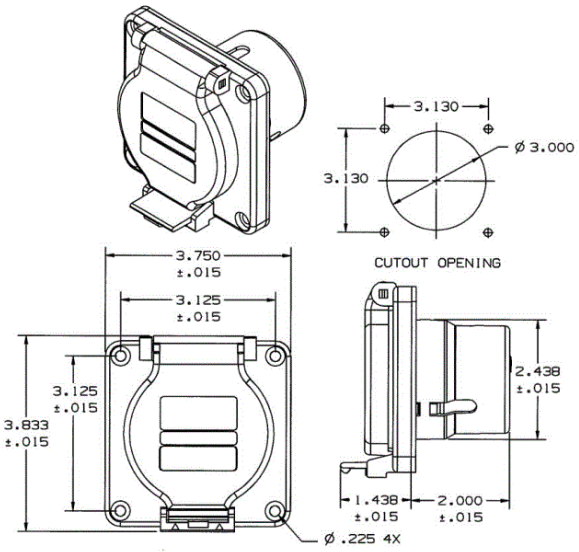

Specifications

Casing	Steel, zinc plated
Terminal Retainer	Phenolic
Blades	Brass
Terminal Screws	Steel

Performance

Electrical

Current Interrupting	Certified for current interrupting at full rated current
Dielectric Voltage	Withstands 2,000V minimum

Mechanical

Terminal Accommodation	#10 AWG - #6 AWG solid or stranded copper wire only

Environmental

Flammability	UL 94 V0
Operating Temperatures	Maximum continuous 75°C; minimum –40°C (w/o impact)

Accessories

Connector	**CS6364C**
Inlet Accommodation	**50A Spider® II Temporary**
Inlet Box Accommodation	**BB2030N**

Online Resources

Customer Use Drawing
eCatalog
Installation Instructions

Dimensions in Inches (mm)

Hubbell Wiring Device-Kellems • Hubbell Incorporated (Delaware) • 40 Waterview Drive • Shelton, CT 06484
Phone (800) 288-6000 • Fax (800) 255-1031 • Specifications subject to change without notice.

HUBBELL® Wiring Device-Kellems