ASSEMBLY INSTRUCTION

2 DOOR 3 DRAWER SERVER

1 Top Panel

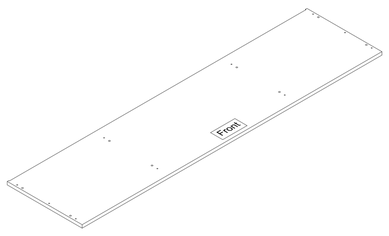

2 Left Side Panel

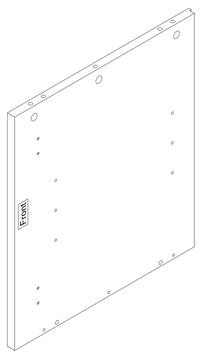

3 Right Side Panel

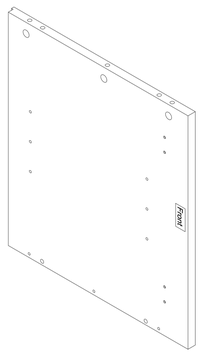

4 Bottom Panel

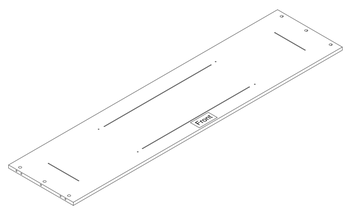

1pc

5 Left Partition

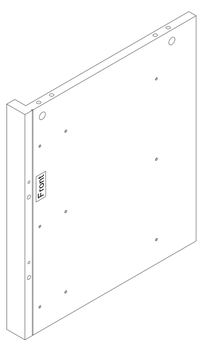

1pc

6 Right Partition

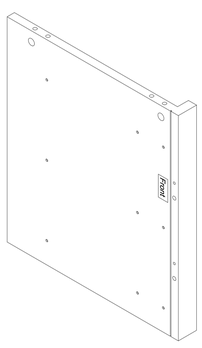

1pc

7 Door

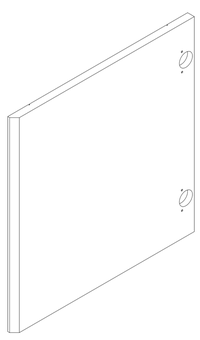

1pc

8 Center Bar

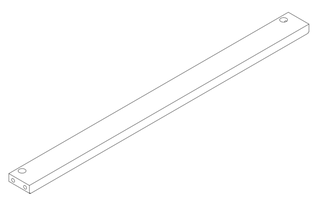

1pc

9 Shelving

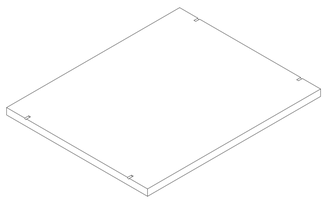

1pc

10 Back Plywood

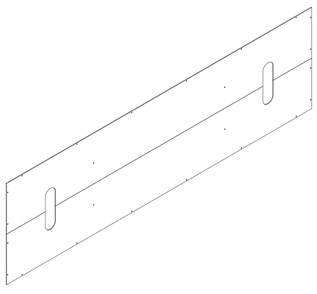

2pcs

11 Metal Leg

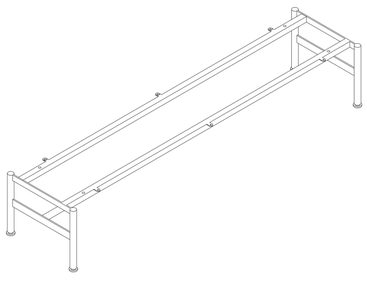

2pcs

101 Top Drawer Front

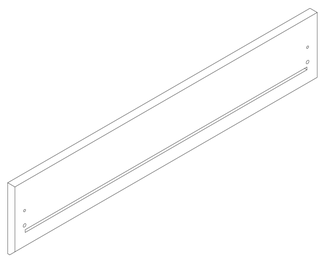

2pcs

102 Left Drawer Side

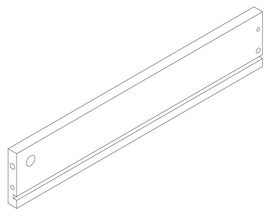

1pc

103 Drawer Back

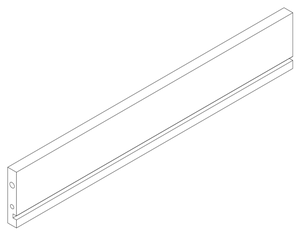

1pc

104 Drawer Base

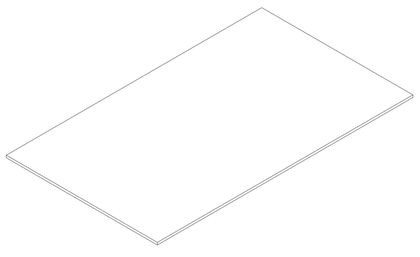

1pc

105 Right Drawer Side

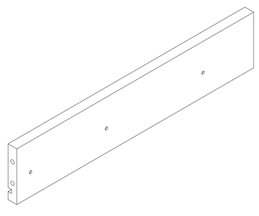

3pcs

106 Center Drawer Front

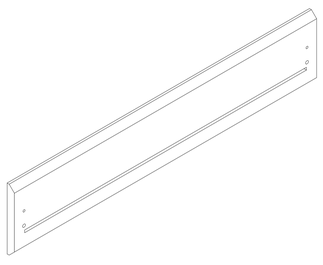

1pc

107 Bottom Drawer Front

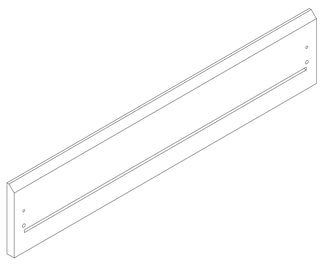

1pc

A Screw M3 x 16mm

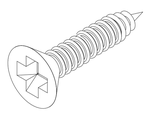

36pcs

B Runner 400mm

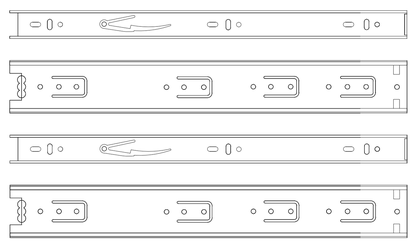

3sets

C Dowel
M8 x 35mm

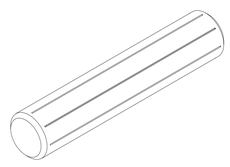

20pcs

D Cam Lock &
Cam Bolt
15 x 12mm /
5 x 25mm

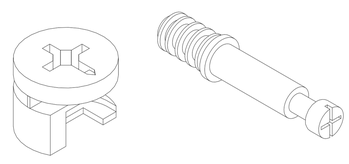

32sets

E Dowel
M6 x 30mm

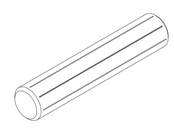

12pcs

F Cam Lock Cover
17 x 5mm

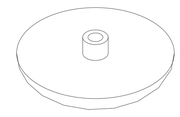

32pcs

G Panhead Screw
M4 x 16mm-Black

24pcs

H Screw
M4 x 16mm

16pcs

I Hinge
H-7

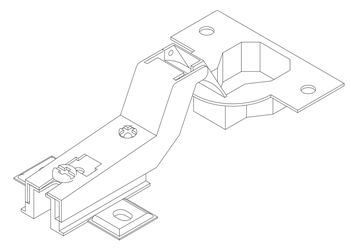

4pcs

J Screw
M4 x 38mm

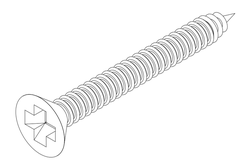

4pcs

K Screw
M4 x 20mm

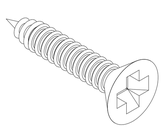

6pcs

L Shelving Support
M6 x 16mm

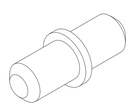

8pcs

M Anti-Tipping Kit

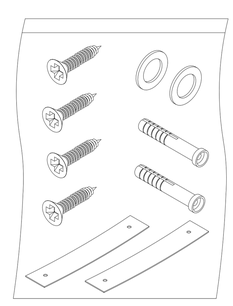

1set

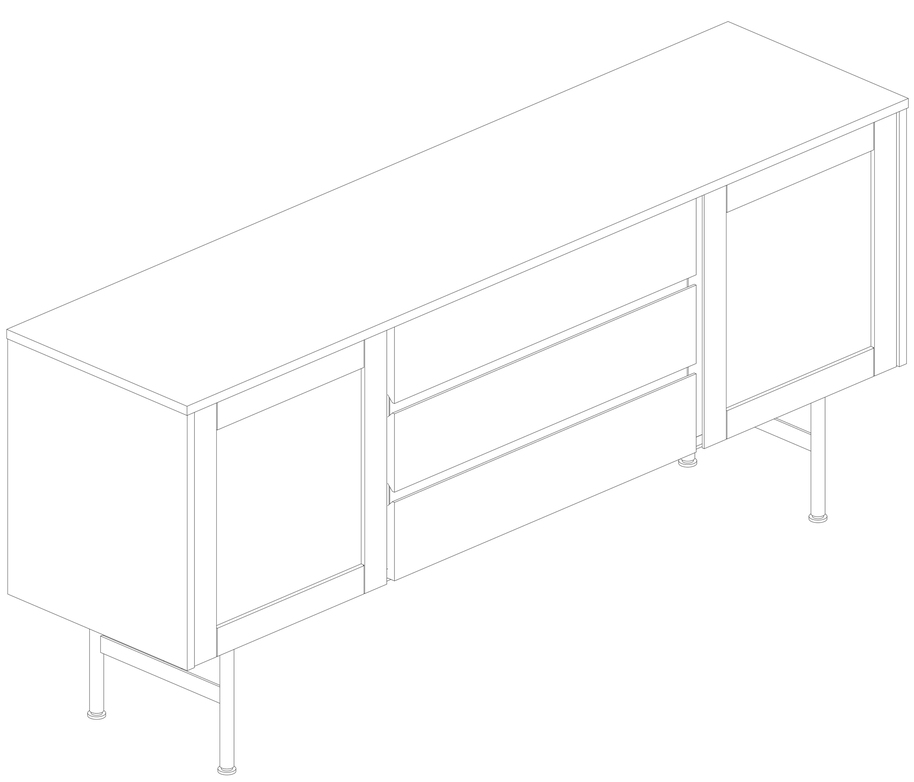

These pages list all the contents included in the box. Please take the time to identify the hardware as well as the individual components to this product. As you unpack and prepare for assembly, place the contents on a carpeted or padded area to protect them from damage.

1 Attach Cam Bolt (D) to Top Panel (1).

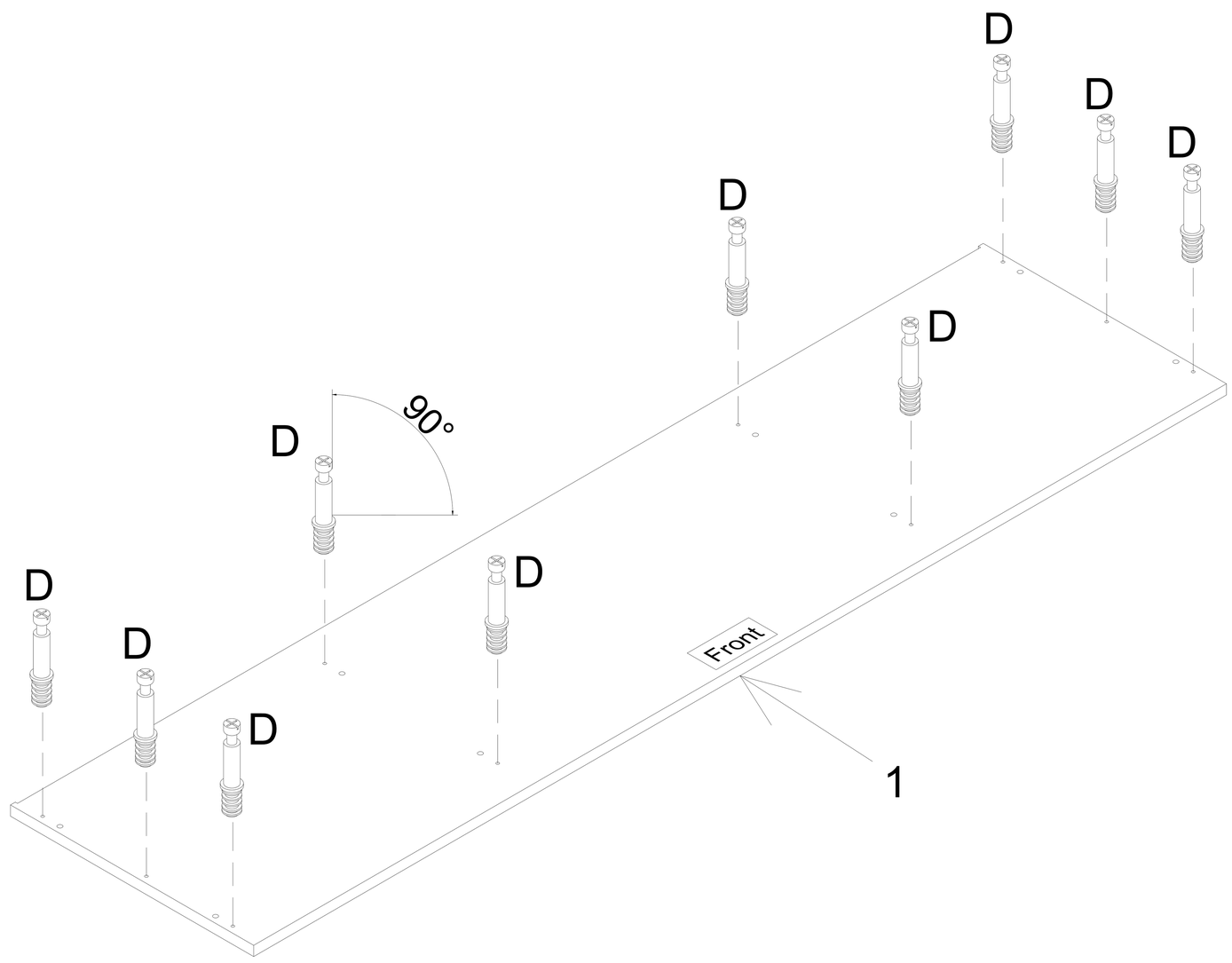

2 Attach Dowel (C) and Cam Lock & Cam Bolt (D) to Left & Right Side Panel (2 & 3).

NOTE : - Make sure arrows on each Cam Lock (D) points towards nearest edge with holes.

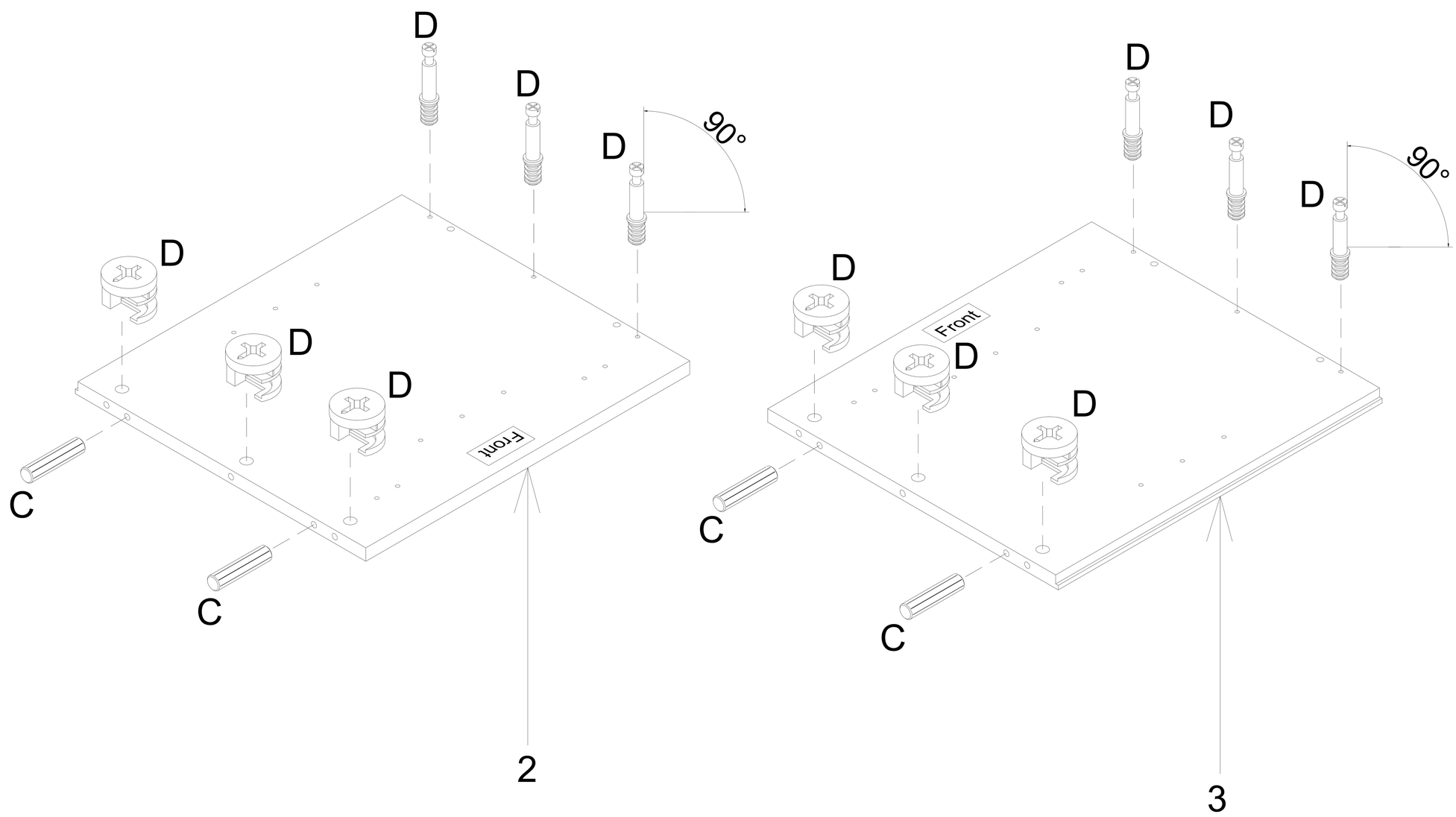

3 Attach Dowel (C) and Cam Lock (D) to Bottom Panel (4).

NOTE : - Make sure arrows on each Cam Lock (D) points towards nearest edge with holes.

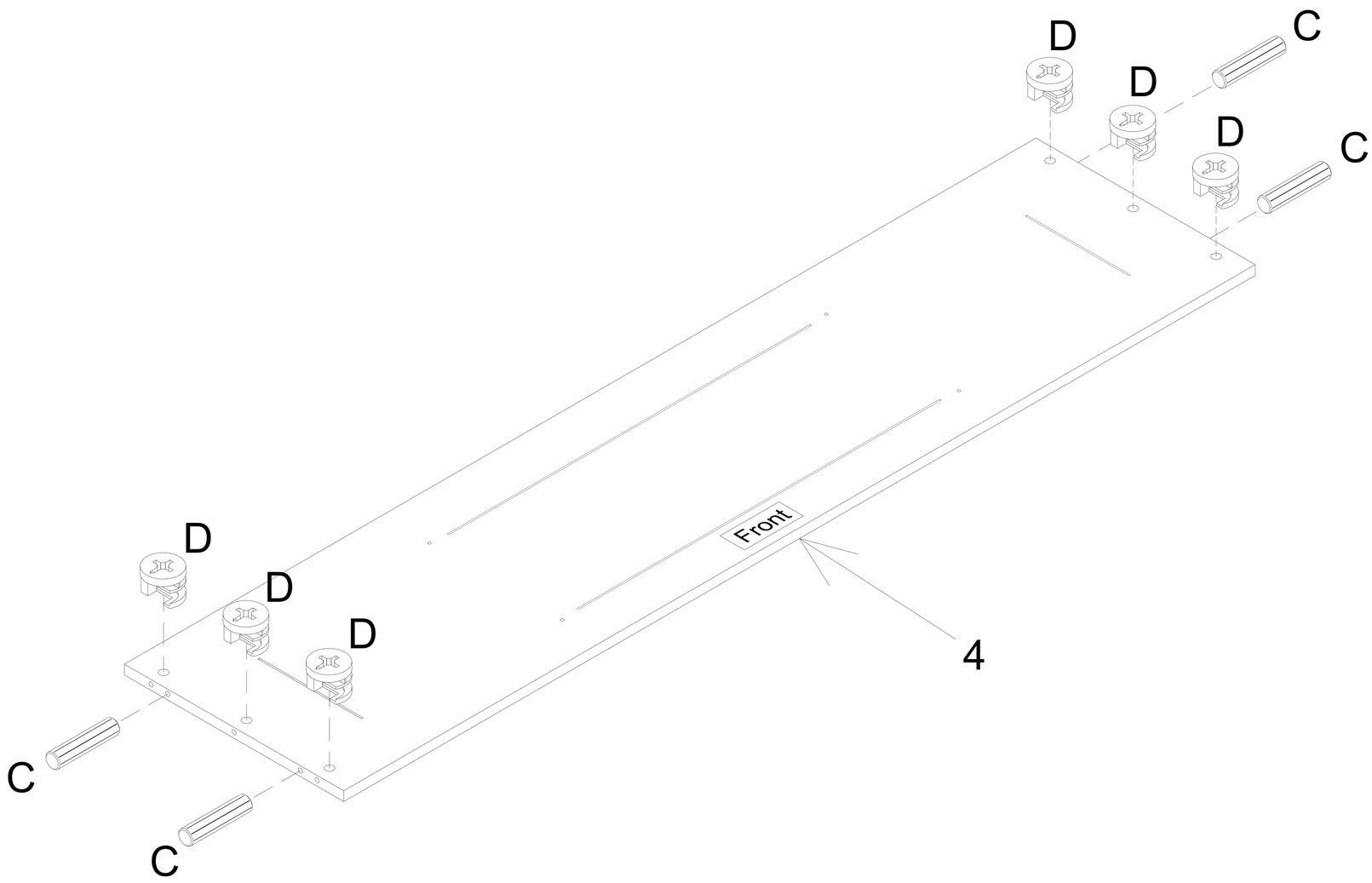

4 Attach Dowel (C), Cam Lock & Cam Bolt (D) to Left & Right Partition (5 & 6).

NOTE : - Make sure arrows on each Cam Lock (D) points towards nearest edge with holes.

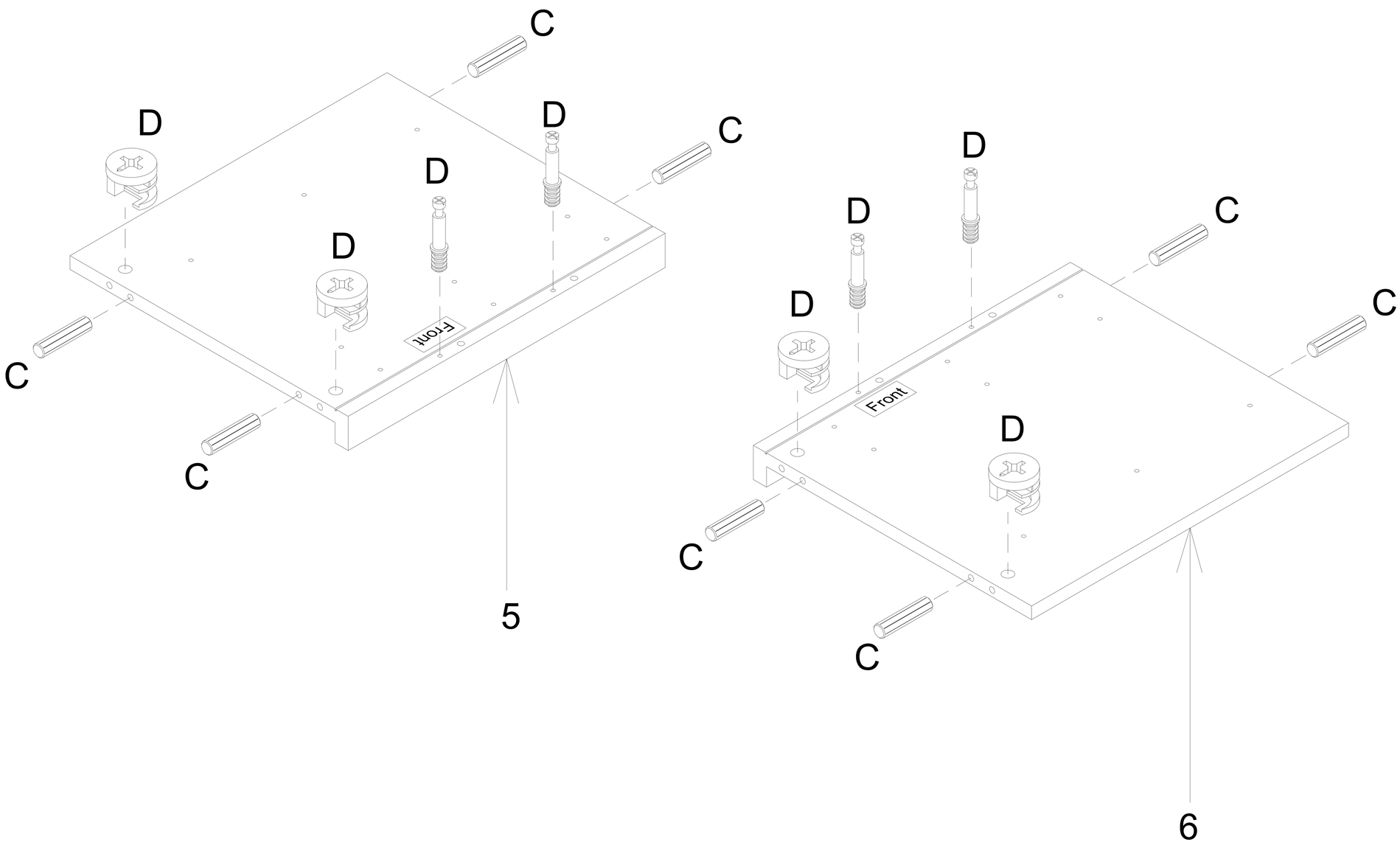

5 Attach Runner (B) to Left & Right Partition (5 & 6) using Screw (A) with screwdriver (not provided).

NOTE : - Do not over tighten the Screw (A).
- Screw (A) should be assembled from the front of the runner. Start from A^1, A^2 then A^3.
- Make sure the screws are installed vertically without slant to ensure screw sits properly in the hole.

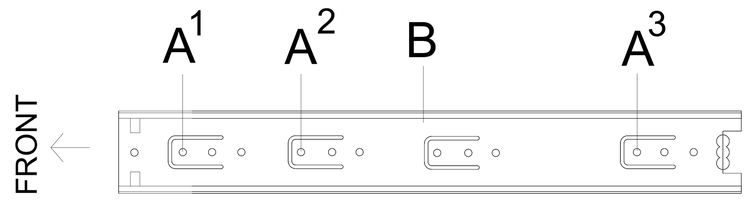

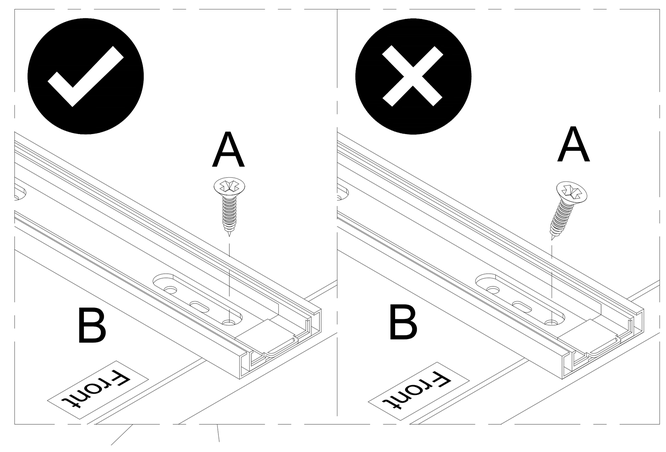

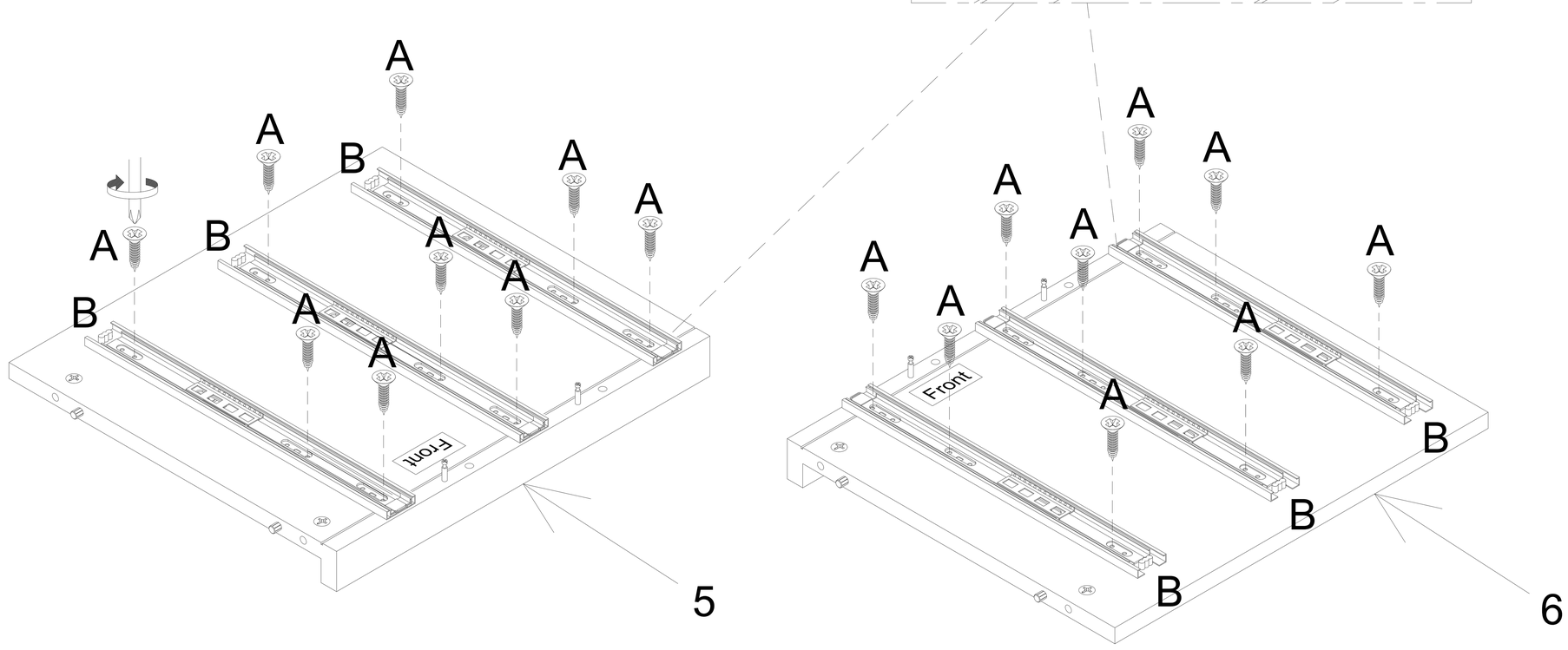

EXTENSION RUNNER DISASSEMBLY STEPS:

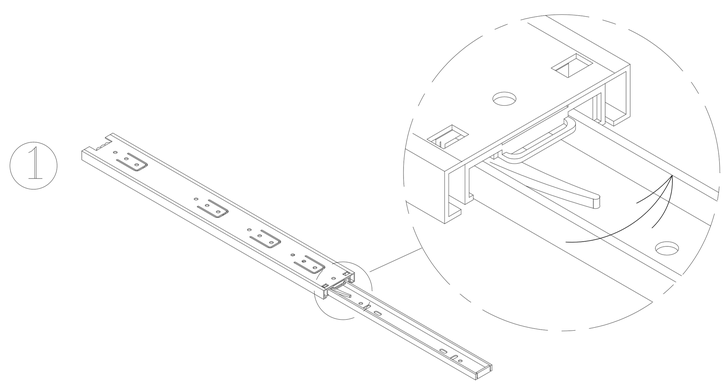

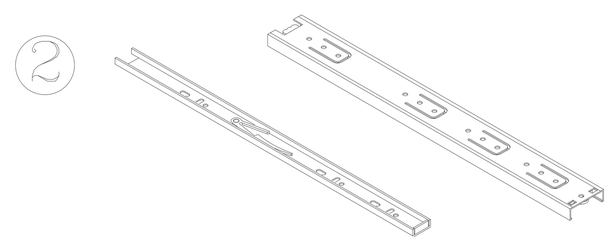

Disassemble the Runner (B) to 2 parts. Fix 1 part on the Left & Right Partition (5 & 6), and fix the other part on the Left & Right Drawer Side (102 & 105).

6 Attach Dowel (C) and Cam Lock (D) to Center Bar (8).

NOTE : - Make sure arrows on each Cam Lock (D) points towards nearest edge with holes.

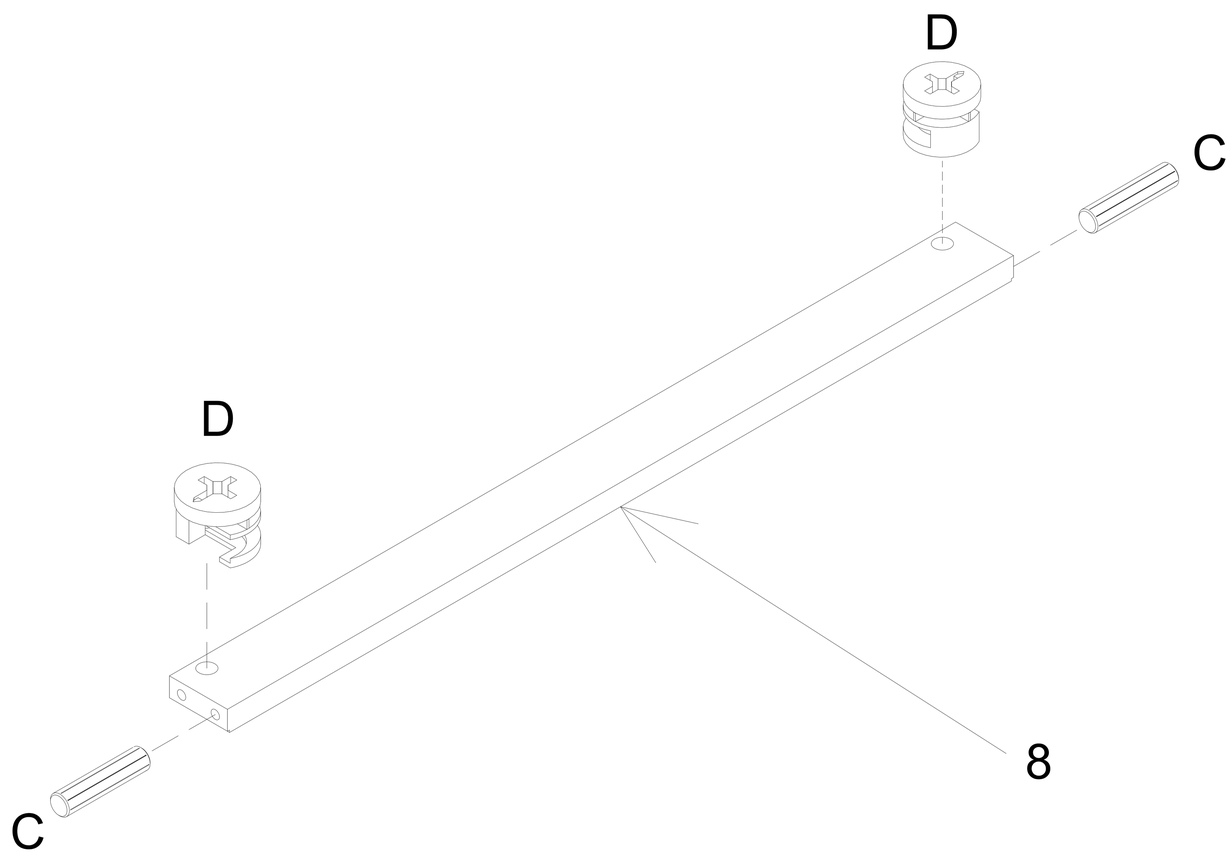

7 Attach Hinge (I) to Door (7) using Screw (H) with screwdriver (not provided).

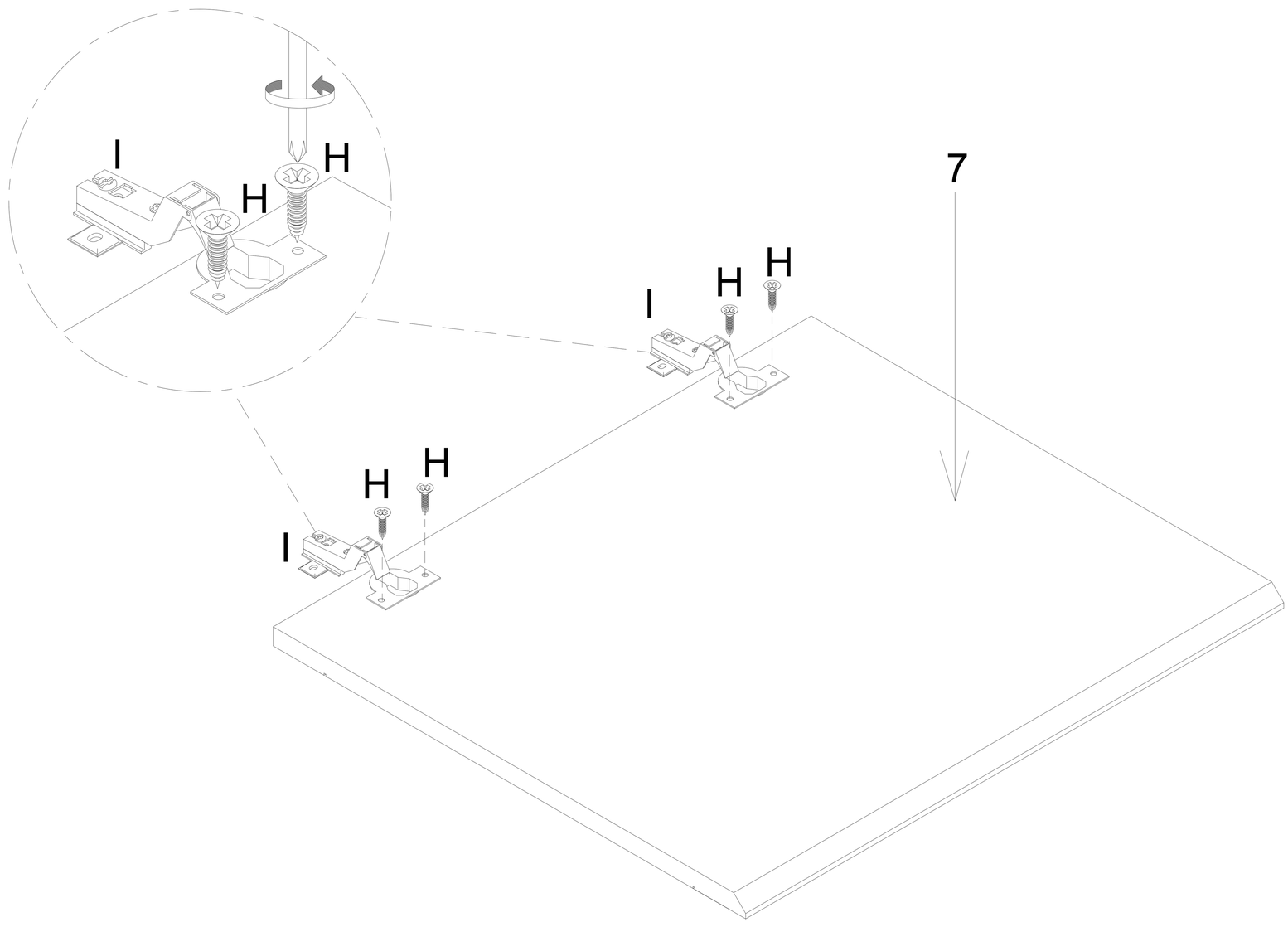

8 Attach Left & Right Partition (5 & 6) to Center Bar (8) and secure with Cam Lock (D) attached in the Step 6. Cover Cam Lock (D) with Cam Lock Cover (F).

NOTE : - Do not over tighten the Cam Lock (D).

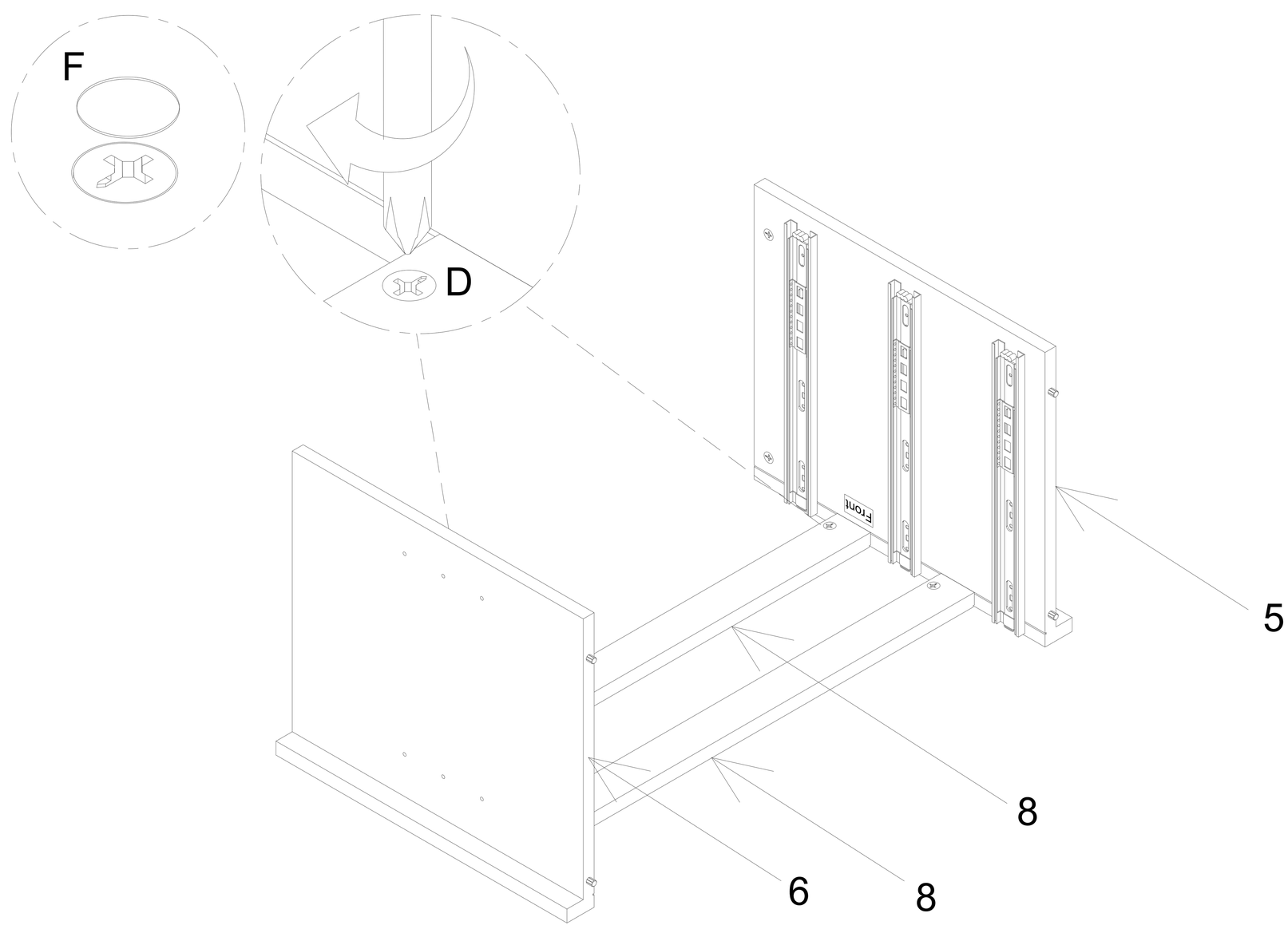

9 Attach Bottom Panel (4) to Left & Right Partition (5 & 6) using Screw (J) with screwdriver (not provided).

NOTE : - Do not over tighten the Screw (J).

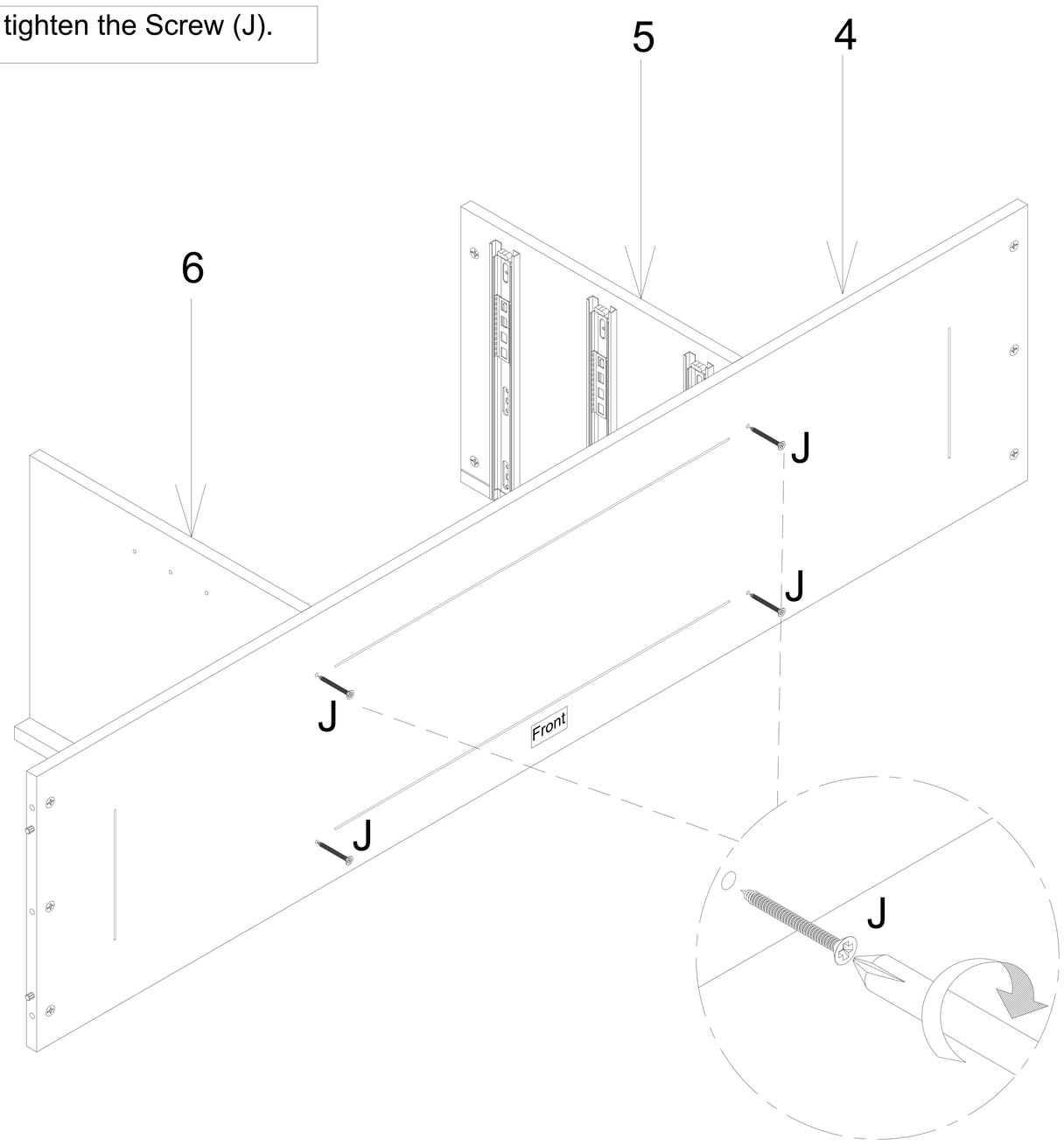

10 Attach Left & Right Side Panel (2 & 3) to Bottom Panel (4) and secure with Cam Lock (D) attached in the Step 3. Cover Cam Lock (D) with Cam Lock Cover (F).

NOTE : - Do not over tighten the Cam Lock (D).

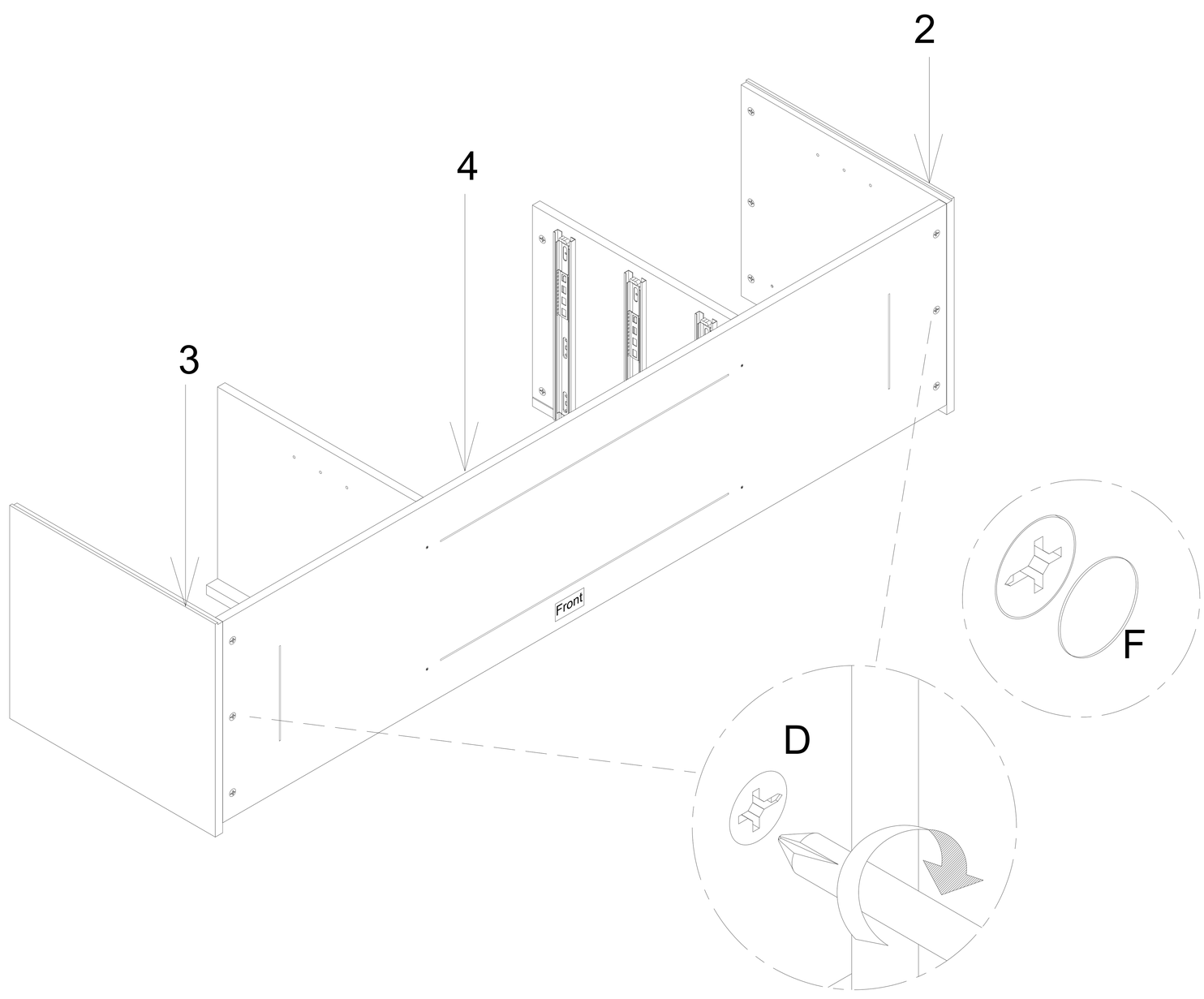

11 Attach Top Panel (1) to the assembled unit and secure with Cam Lock (D) attached in the Step 2 and Step 4. Cover Cam Lock (D) with Cam Lock Cover (F).

NOTE : - Do not over tighten the Cam Lock (D).

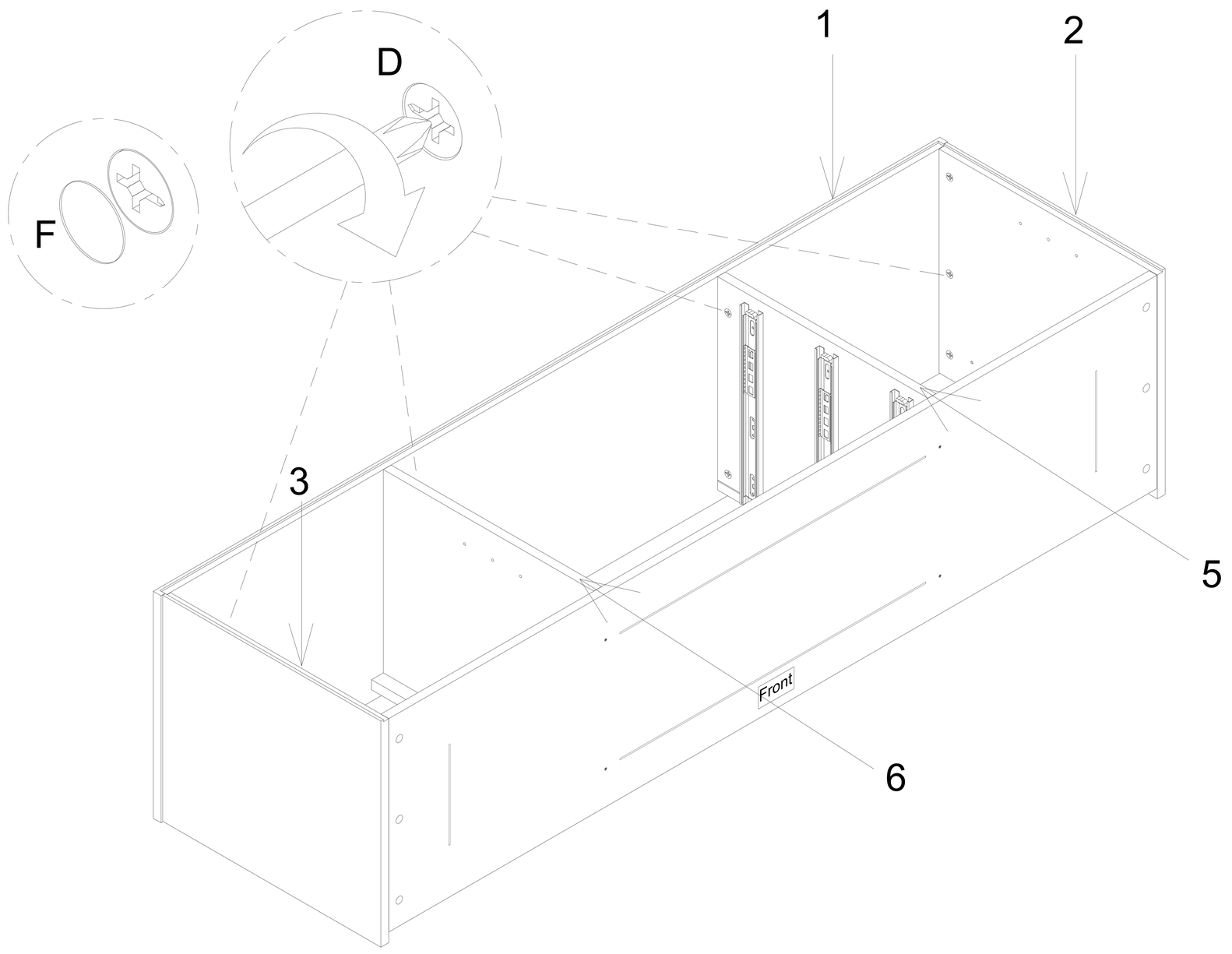

12 Attach Back Plywood (10) to the assembled unit using Panhead Screw (G) with screwdriver (not provided).

NOTE : - Do not over tighten the Panhead Screw (G).

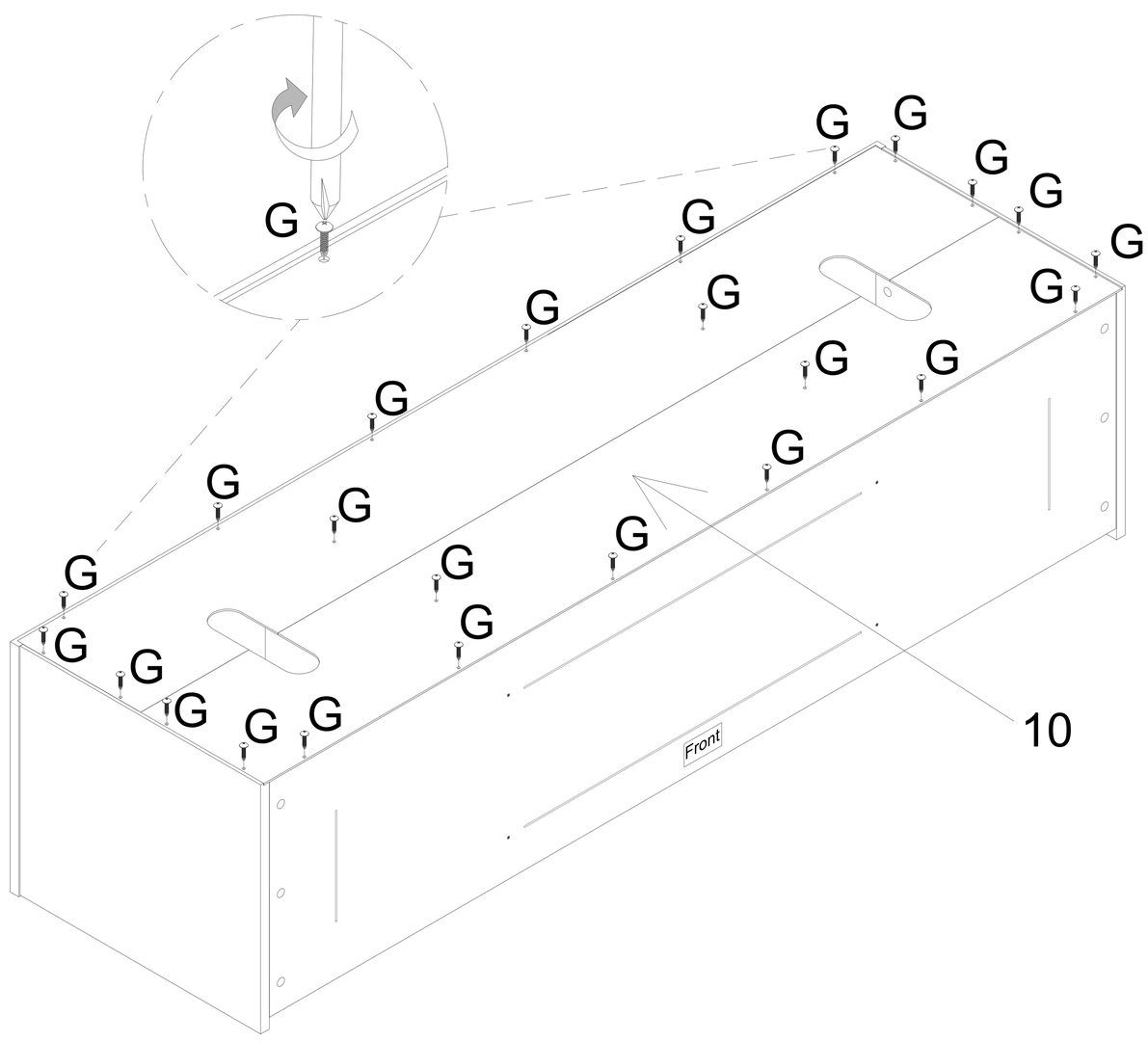

13 Attach Metal Leg (11) to Bottom Panel (4) using Screw (K) with screwdriver (not provided).

NOTE : - Do not over tighten the Screw (K).

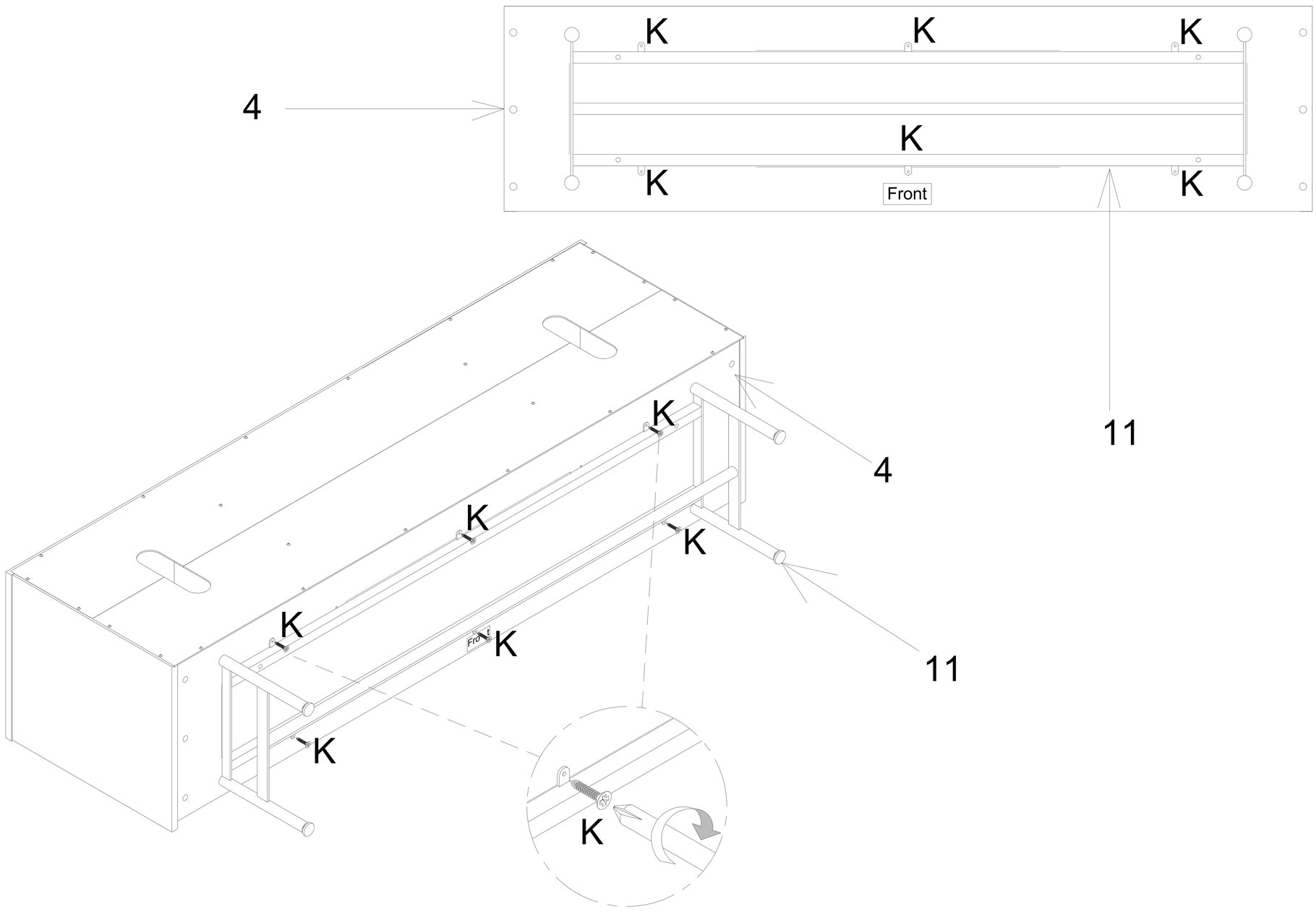

14 Stand the assembled unit up. Insert Shelving Support (L) into Left & Right Side Panel (2 & 3) and Left & Right Partition (5 & 6) at desired shelf heights. Slot Shelving (9) into the assembled unit.

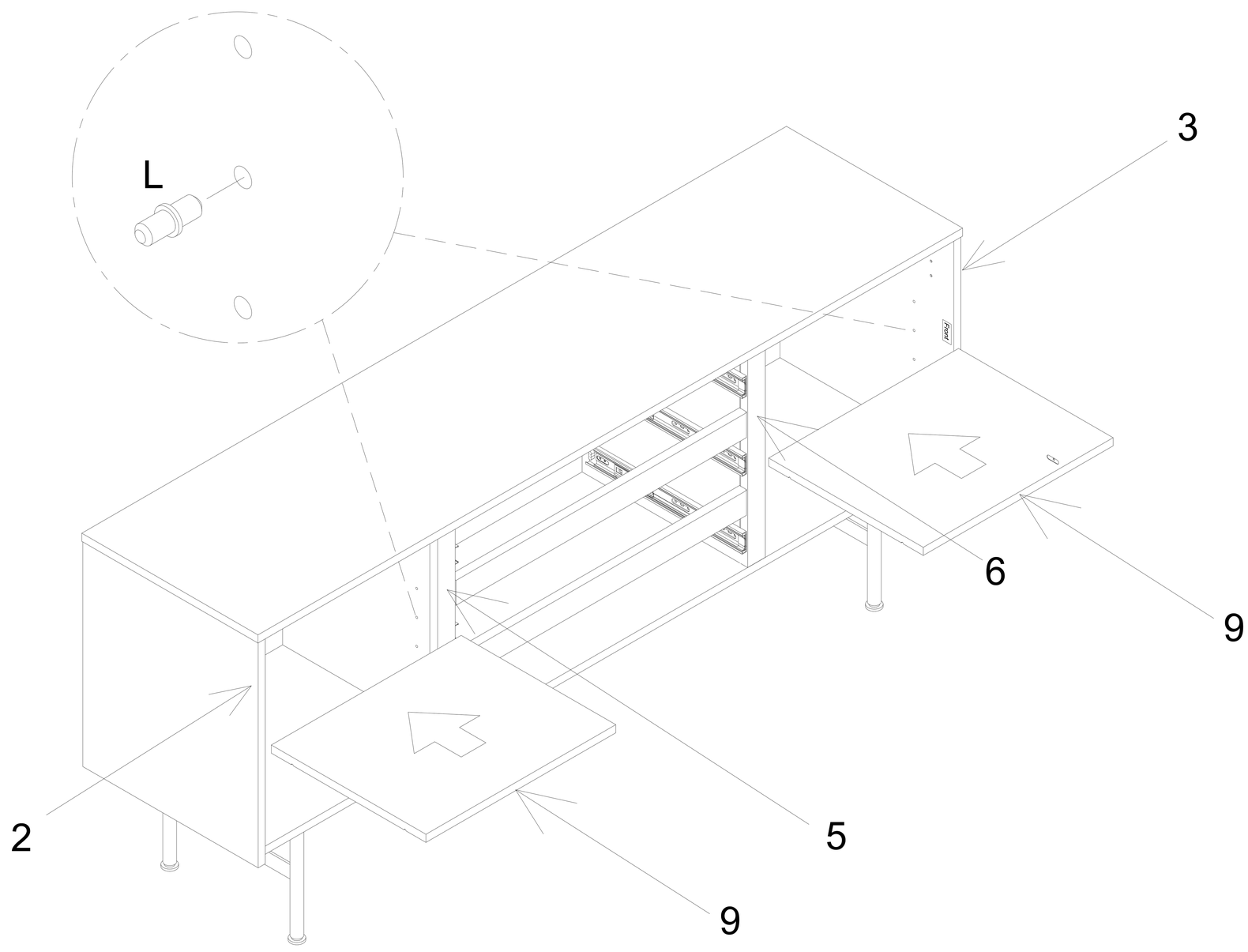

15 Attach Door (7) to the assembled unit using Screw (H) with screwdriver (not provided).

NOTE : - Do not over tighten the Screw (H).

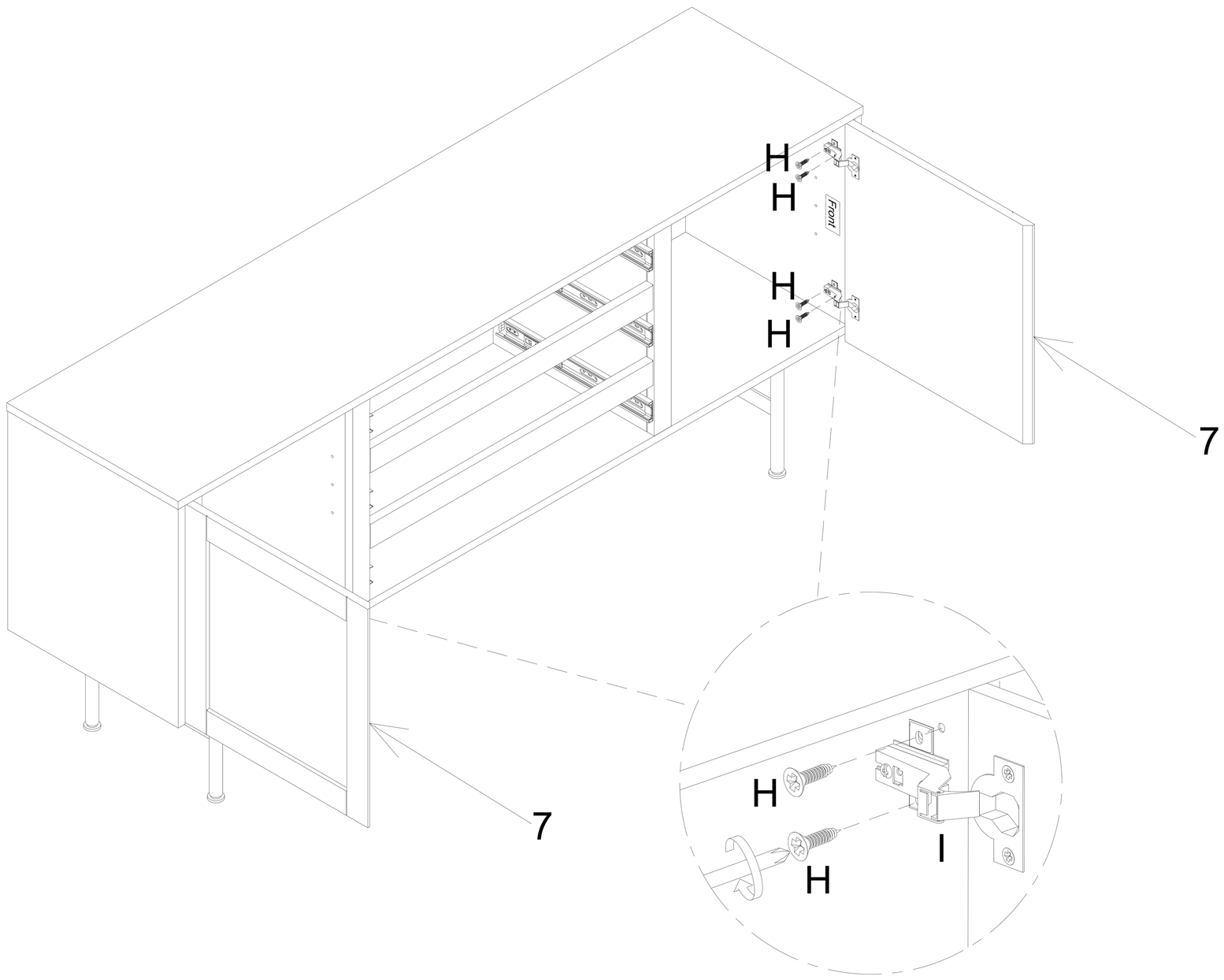

HINGE ADJUSTMENT: If the doors do not appear square or aligned, loosen or tighten the appropriate screws on each case hinge as illustrated.

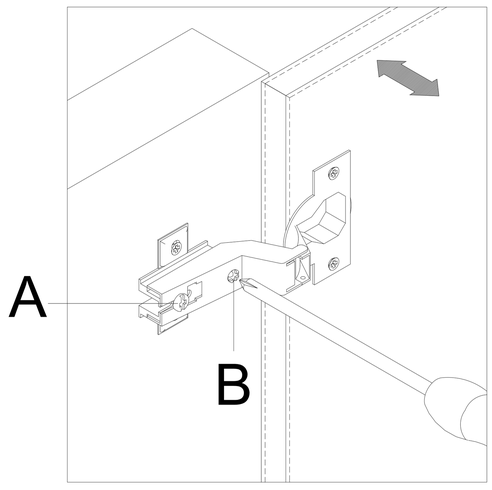

1) Side to side adjustment: Loosen Screw A, adjust gap with Screw B, and re-tighten Screw A.

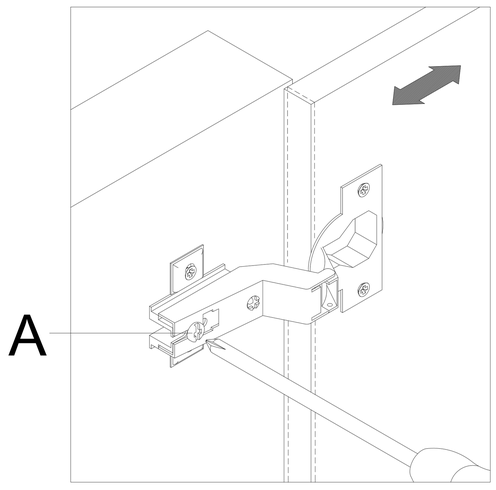

2) Depth adjustment: Loosen Screw A, push Hinge Arm forwards or backwards, and re-tighten Screw A.

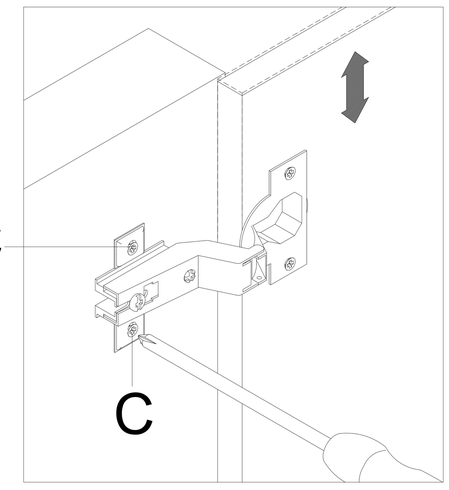

3) Height adjustment: Loosen Screw C, adjust door height, and re-tighten Screw C.

16 Adjust Leg Levelers as needed.

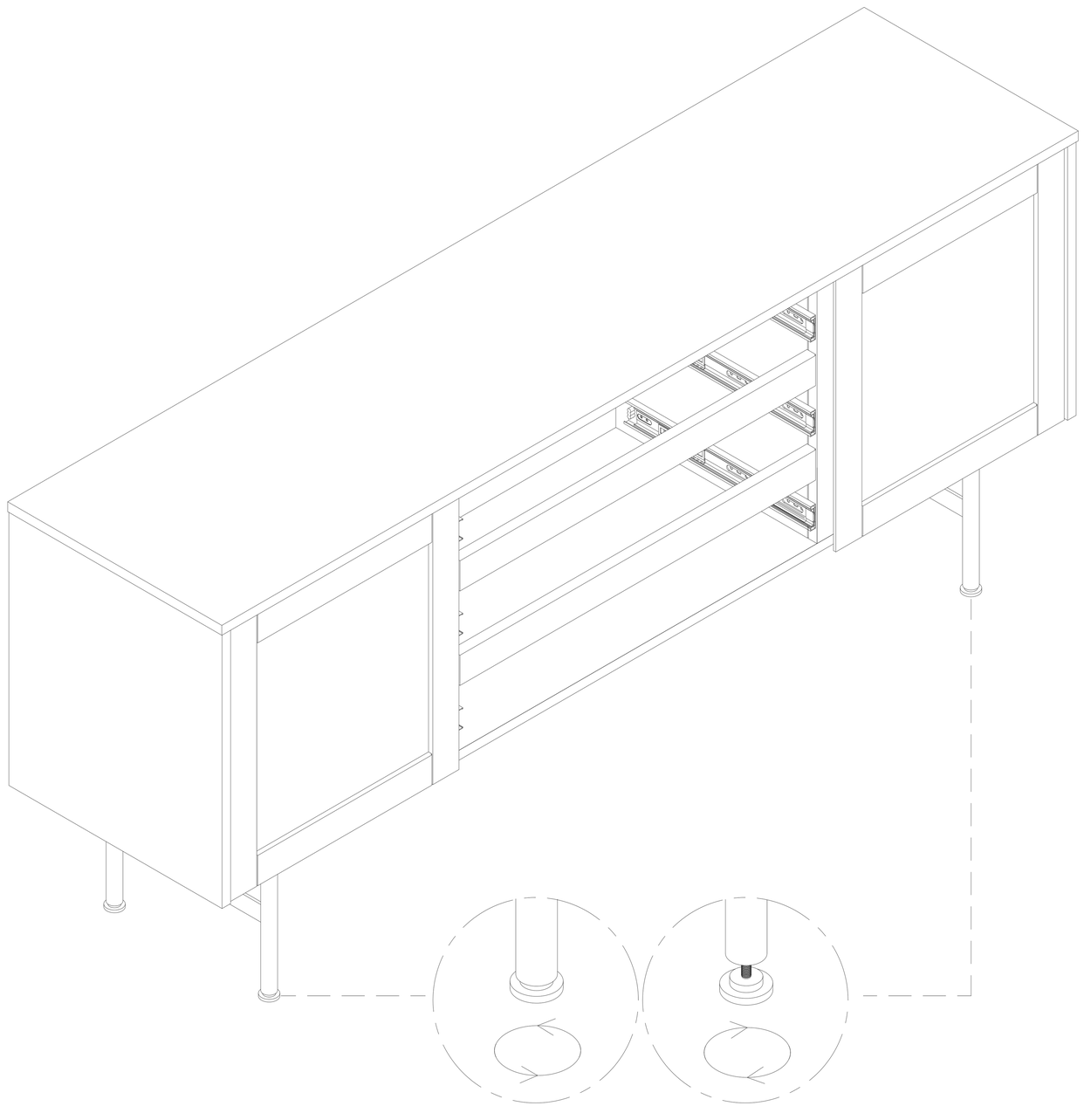

17 Attach Runner (B) to Left & Right Drawer Side (102 & 105) using Screw (A) with screwdriver (not provided).

NOTE : - Do not over tighten the Screw (A).

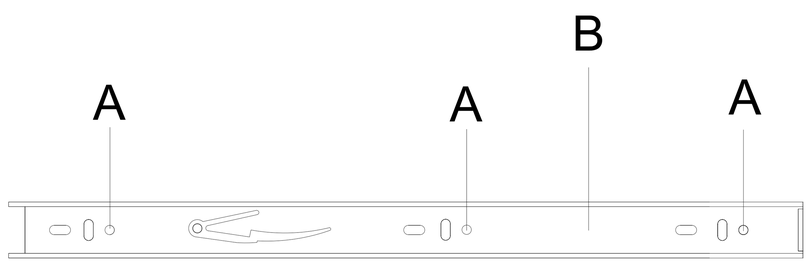

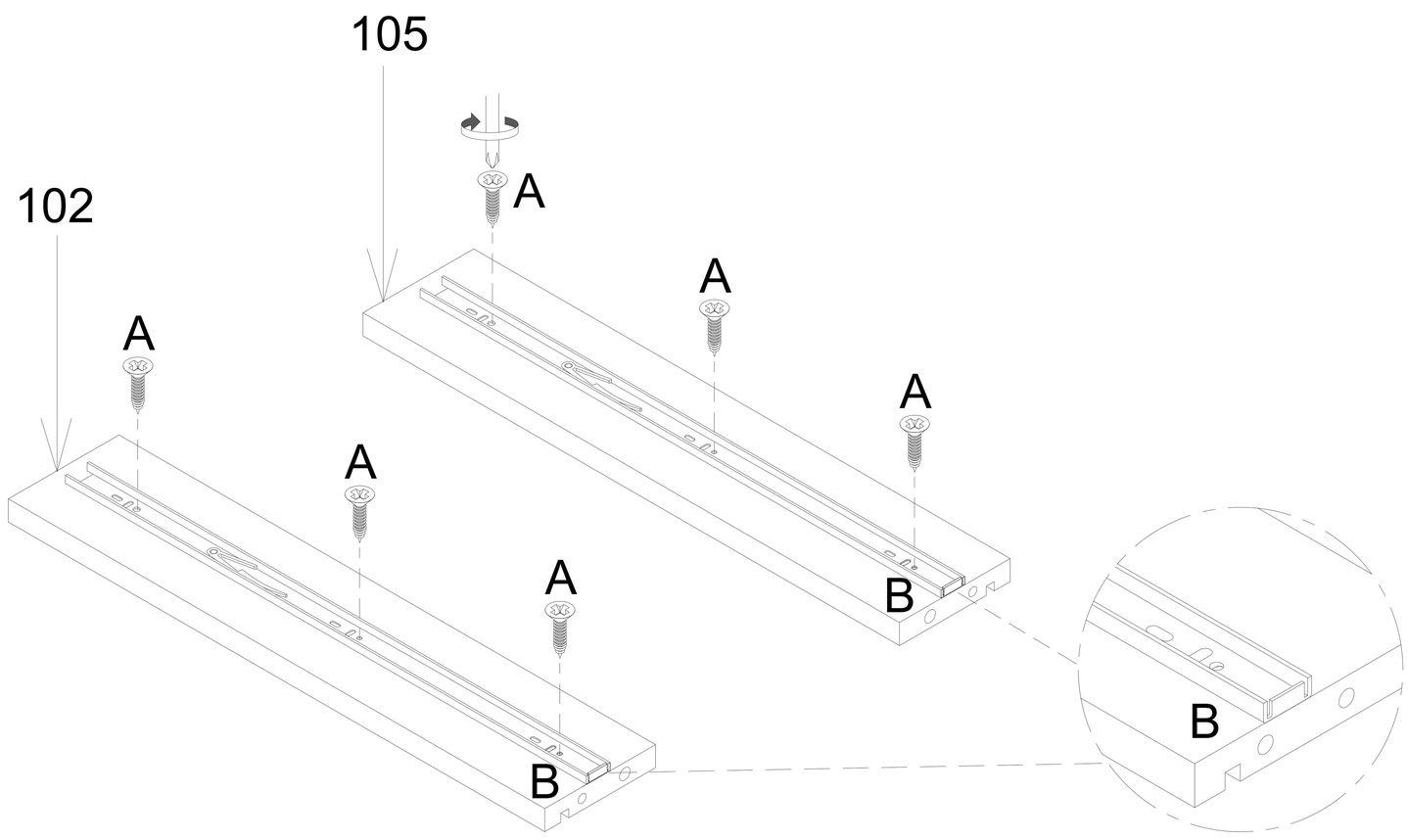

18 Flip over Left & Right Drawer Side (102 & 105). Attach Dowel (E) and Cam Lock (D) to Left & Right Drawer Side (102 & 105) and Drawer Back (103). Attach Cam Bolt (D) to Left & Right Drawer Side (102 & 105), Top Drawer Front (101), Center Drawer Front (106) and Bottom Drawer Front (107).

NOTE : - Make sure arrows on each Cam Lock (D) points towards nearest edge with holes.

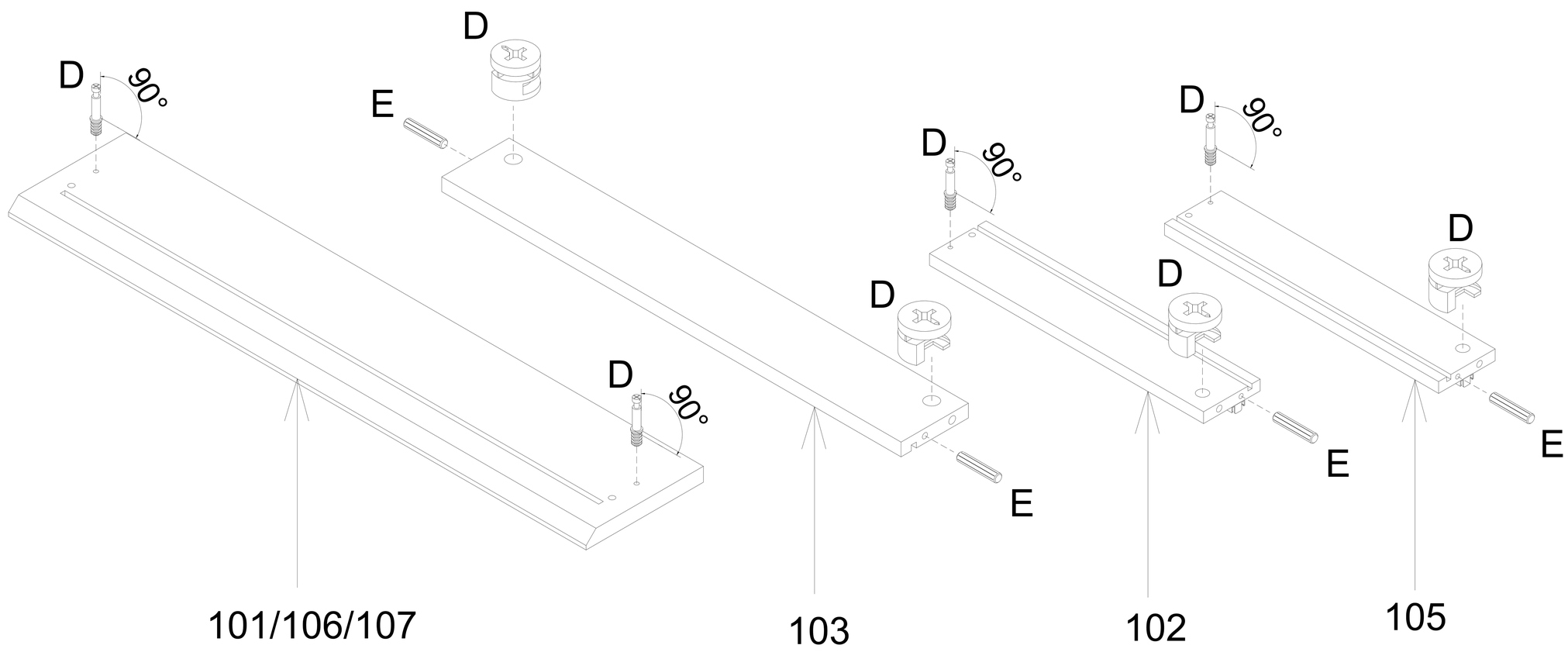

19 Attach Left & Right Drawer Side (102 & 105) to Drawer Back (103) and secure with Cam Lock (D) attached in the Step 18. Cover Cam Lock (D) with Cam Lock Cover (F).

NOTE : - Do not over tighten the Cam Lock (D).

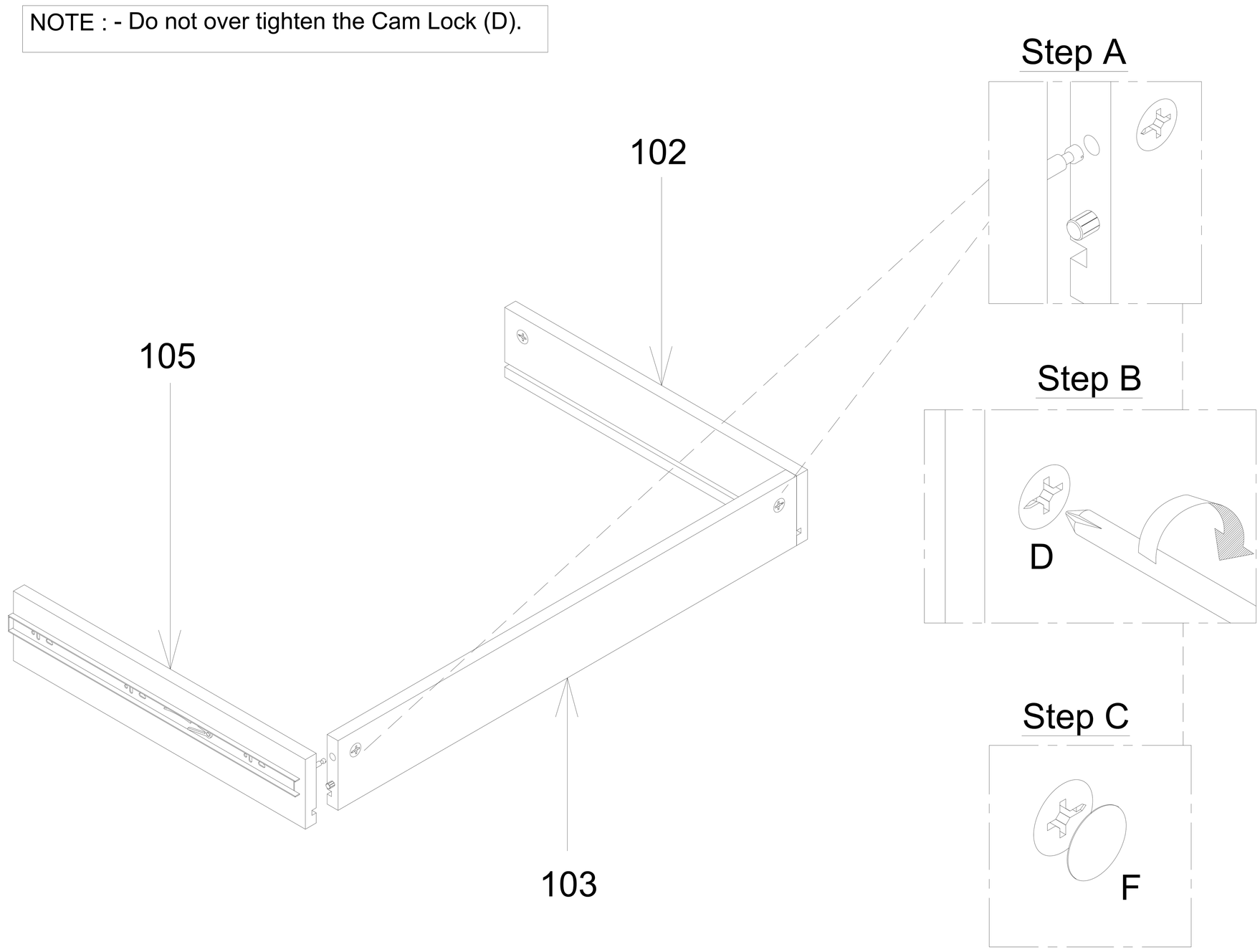

20 Slot Drawer Base (104) into corresponding grooves. Attach Top & Center & Bottom Drawer Front (101 & 106 & 107) to the Drawer Box and secure with Cam Lock (D) attached in the Step 18. Cover Cam Lock (D) with Cam Lock Cover (F).

NOTE : - Do not over tighten the Cam Lock (D).

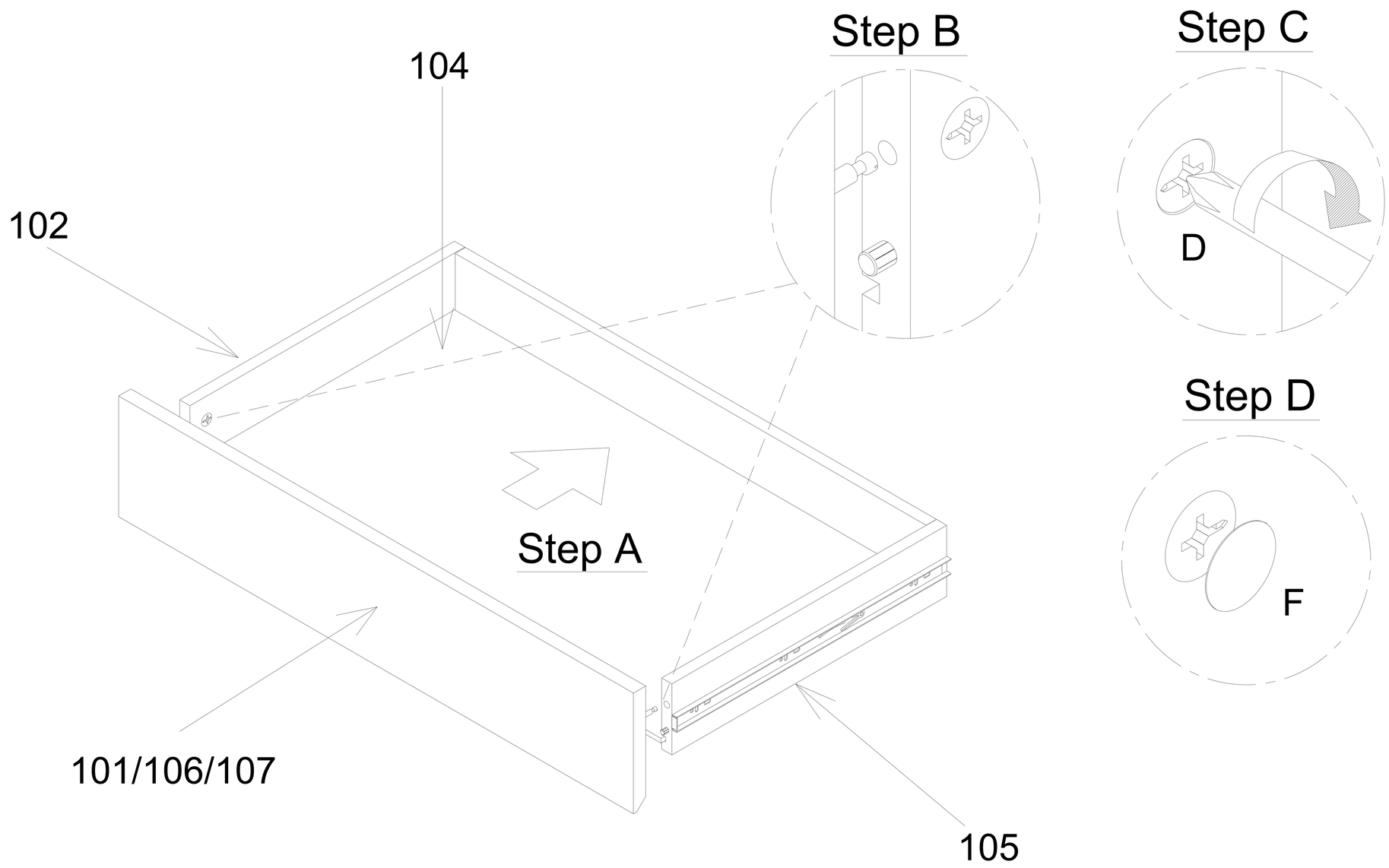

21 Slot Drawers into the assembled unit.

EXTENSION RUNNER ASSEMBLY STEP:

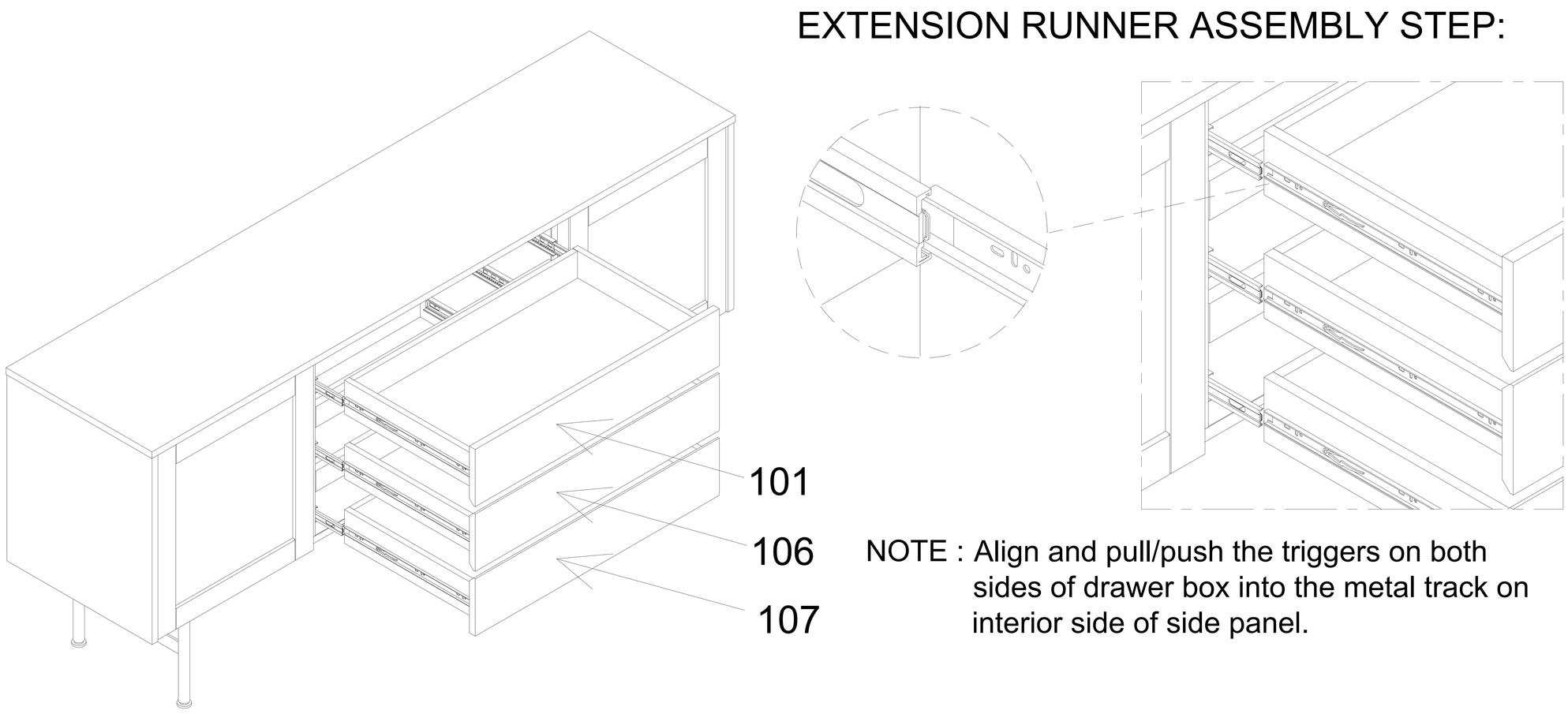

NOTE : Align and pull/push the triggers on both sides of drawer box into the metal track on interior side of side panel.

22 Attach Anti-Tipping Kit (M) to wall.

1. Drill holes at wall and insert Screw Plug into holes.
2. Move assembled unit to wall and screw in Safety Belt using Washer and Screw.
3. Screw in Safety Belt at wall using Screw.

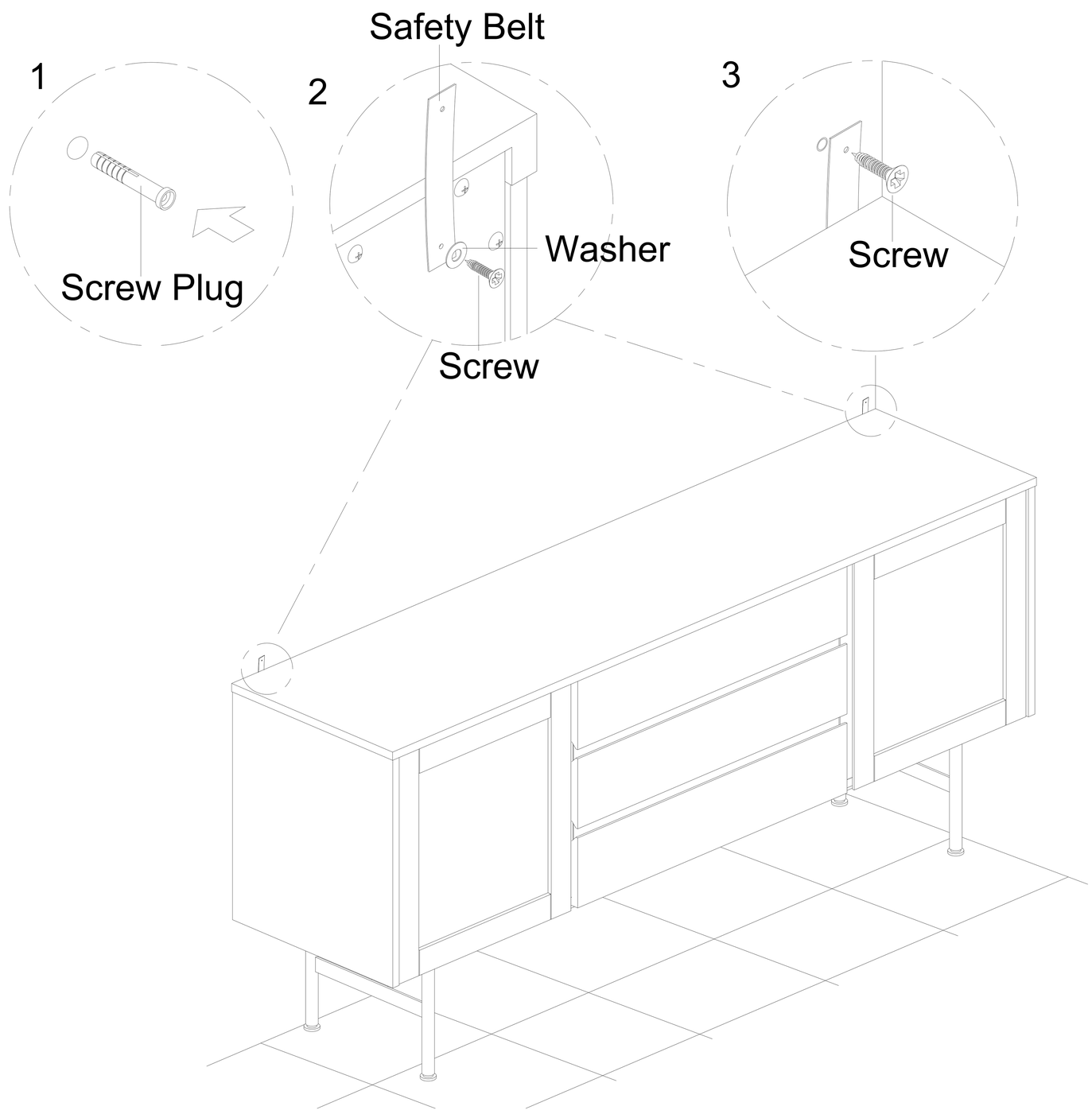

Cleaning & Care

Treat surface with care. Surface is resistant to scratches but is not scratch resistant. Clean surfaces with a dry or damp soft cloth. Do not use abrasive cleaners. Hardware may loosen over time. Periodically check that all connections are tight.