KINGSTON

Dual Towel Bar

Installation Instructions

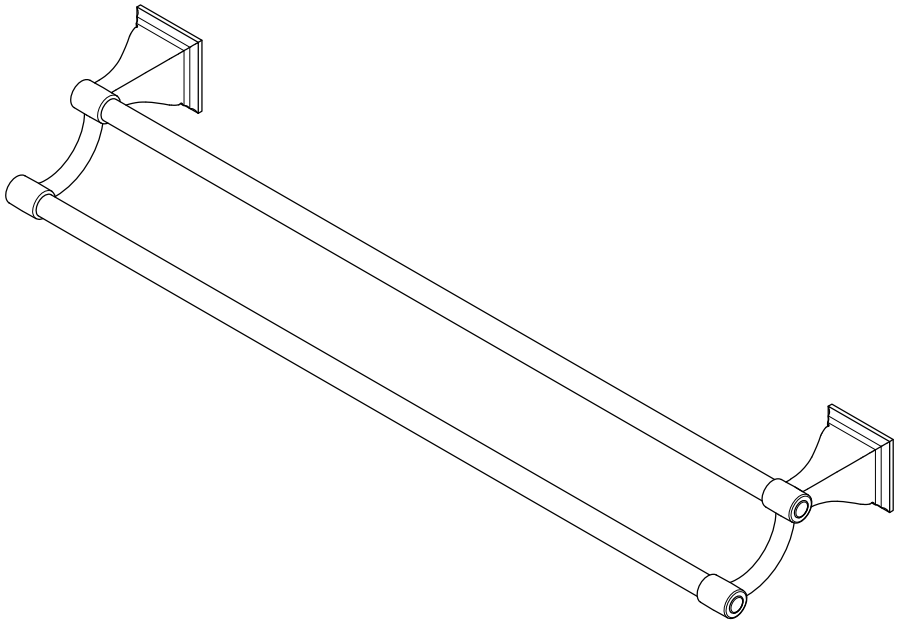

Parts:

Mounting Plate	Mounting Screw & Anchor	Slotted Set Screw
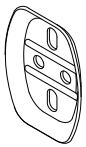	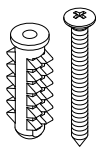	
2 Pcs	4 Pcs	2 Pcs

www.kingstonbrass.com

TOLL-FREE CUSTOMER SERVICE: 1-877-2-KBRASS
TECHNICAL SUPPORT E-mail: service@kingstonbrass.com
12775 Reservoir Street, Chino, CA 91710

⚠CAUTION

Failure to follow all installation directions may cause product to detach from the wall and cause serious injury

Tools Required

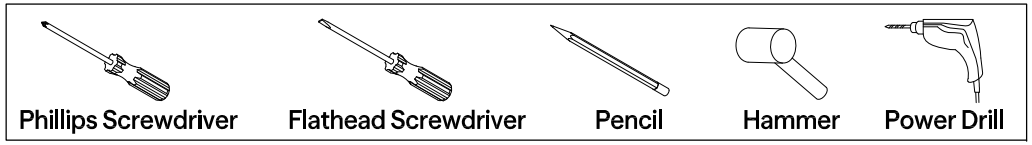

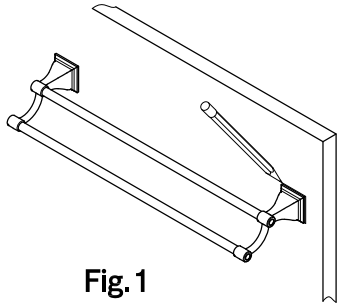

Fig. 1

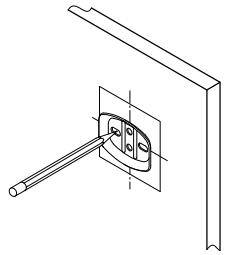

Fig. 2

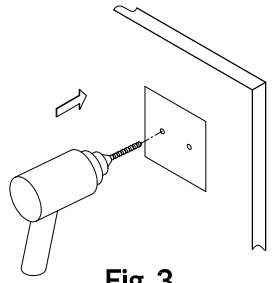

Fig. 3

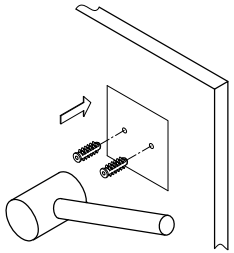

Fig. 4

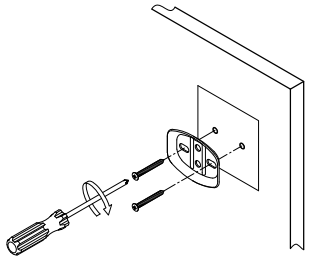

Fig. 5

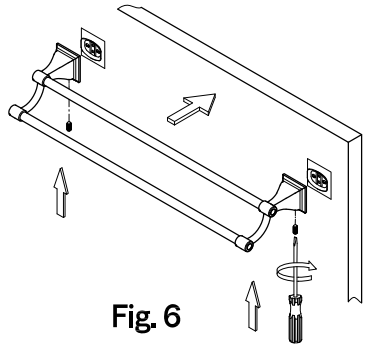

Fig. 6

Installation Steps :

Step 1. Locate where you would like to install the dual towel bar.
Place a base onto the wall and trace around it with a pencil (Fig 1).

Step 2. Place the mounting plate in the center of the pencil outline you just made and mark the location of the mounting screws (Fig 2). Drill holes at the marked locations(Fig 3).

Step 3. Insert anchors into the holes with a hammer until flush with the wall (Fig 4).

Step 4. Screw the mounting plate (with the lips facing out) to the wall with the mounting screws (Fig 5).

Step 5. Repeat steps 1 through 4 with the other side.

Step 6. Place the unit, with the small hole in the base underneath, over the mounting plate by tightening the slotted set screws with a flat head screwdriver until the base is tightly fixed (Fig 6).

Cleaning

Clean with a damp cloth only.
Avoid using metal or abrasive polishes.

©2025 LVC Kingston LLC. All Rights Reserved.

2025-05-D