Cyrus 6042CF AFR AcrylX Freestanding Bathtub

Model number:	W3AX6042FTO-WH

Dimensions: 60" x 42" x 23"

Installation: Freestanding

Material: AcrylX™

Standard Features:

- 2-piece freestanding bathtub
- Two-person bath
- Transitional oval design
- Faucet can be deck-mounted or floor-mounted
- Above-the-Floor Rough (AFR)

Product characteristics:

- 1 Tub - 2 Pieces
- F2 Drain compatible
- Two-person bath

Standard Colors:

White

Certifications

AQUATIC products adhere to one or more of the following certifications:

AQUATIC

Cyrus 6042CF AFR AcrylX Freestanding Bathtub

Model number:	W3AX6042FTO-WH

Dimensions: 60" x 42" x 23"

Installation: Freestanding

Material: AcrylX™

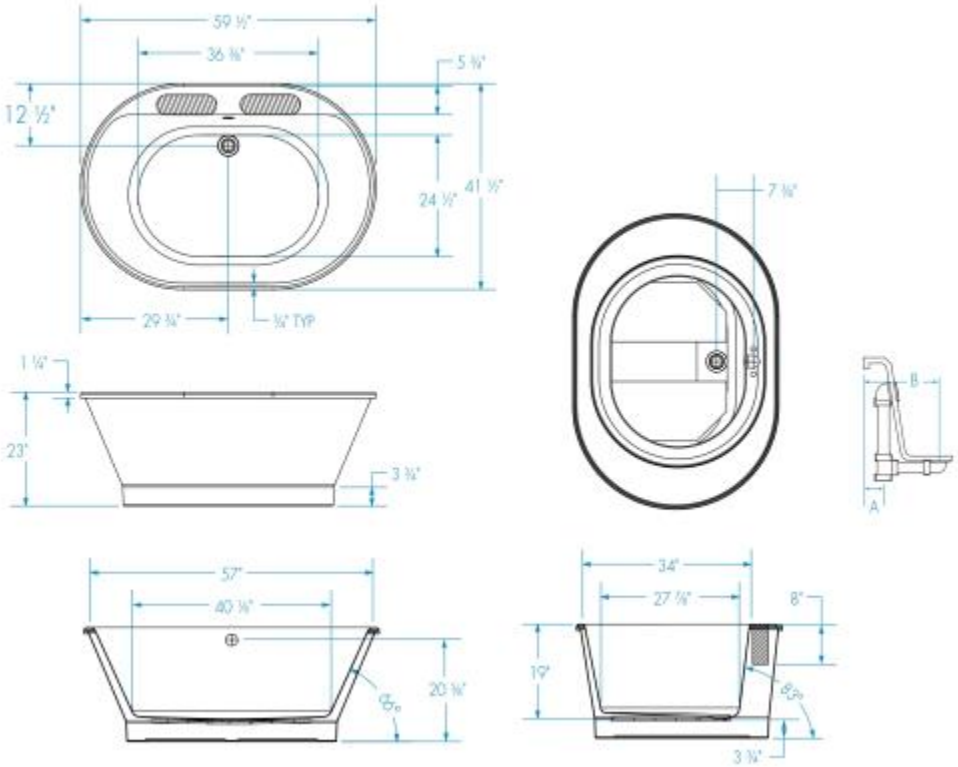

Dimensions

60 x 42 x 23 In.
(1524 x 1067 x 584 mm)

Water Capacity

66 gallons

Weight

101 lbs - 45 3/4 kg

Bathing Well

40 1/4 In. x 28 In.
(1019 mm x 708 mm)

Deep Sump Height

18.625 In. - 473 mm

Drain location:

Front Center

Project:

Contractor:

Representative:

Date:

Tel:

Notes: