KINGSTON

TO ORDER PARTS, CALL: 1-877-252-7277
www.kingstonbrass.com

KS3401,2,5,8TL

Single Handle 4" Centerset Lavatory Faucet with Push-Up Pop-Up

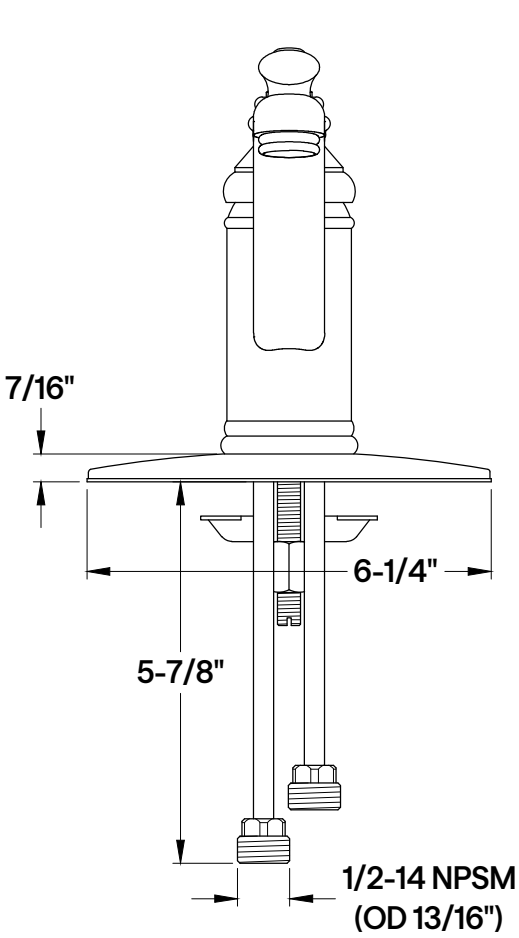

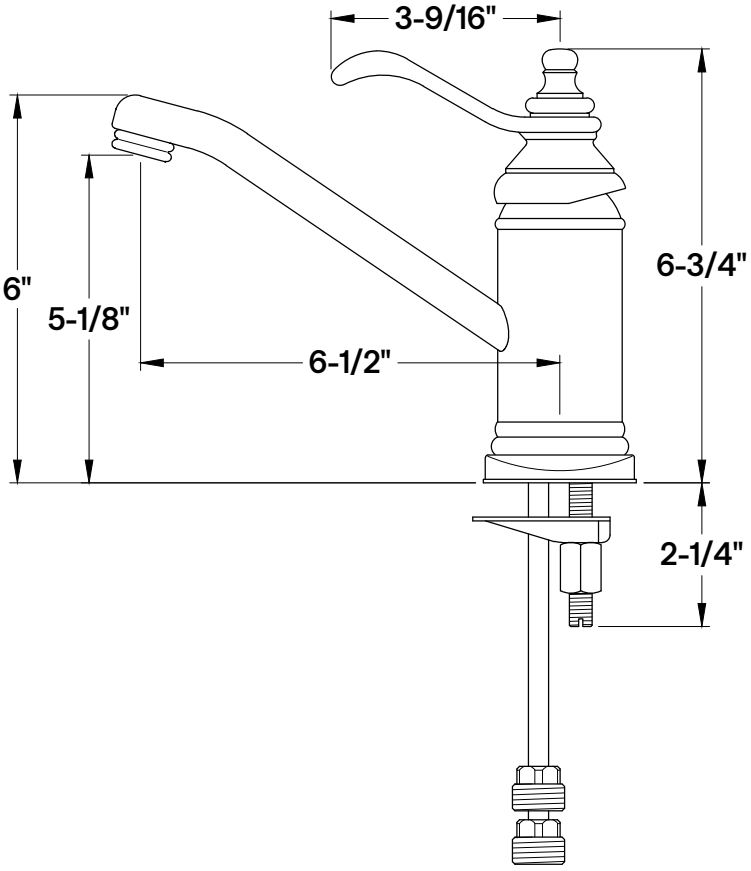

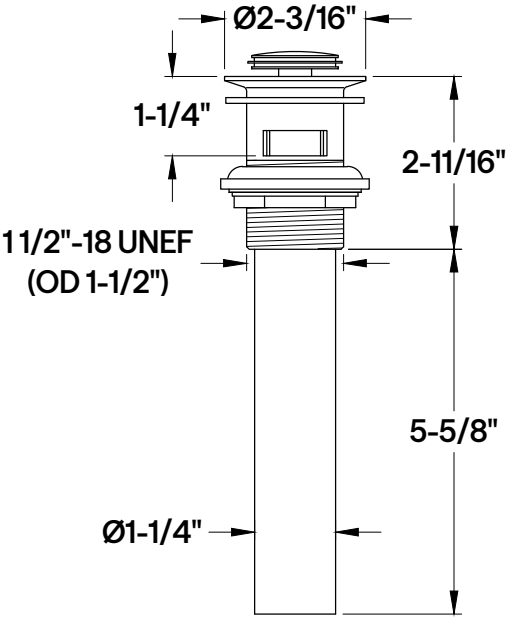

2025-10-C