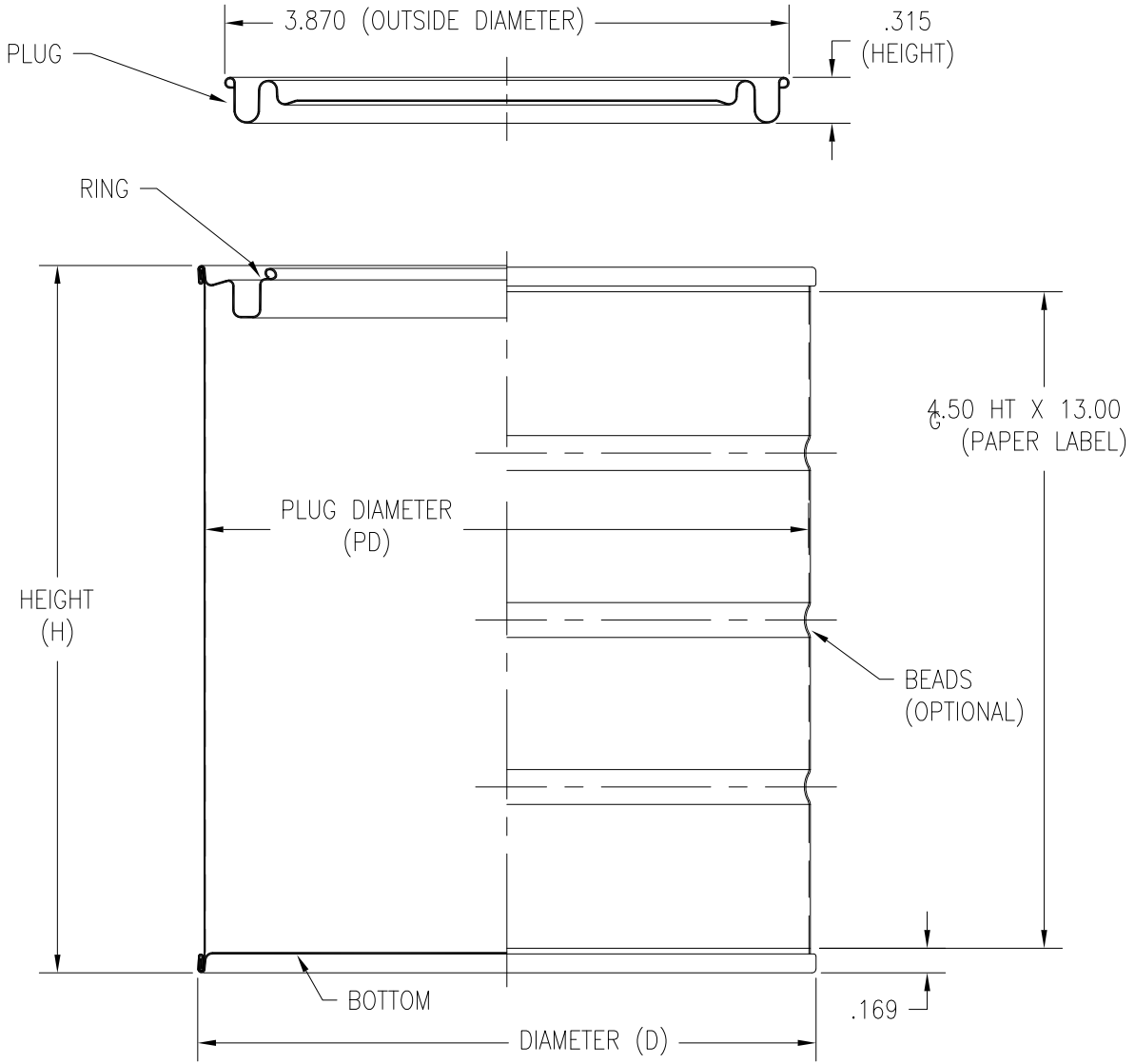

REFERENCE DIMENSIONS			
CAN	D	PD	H
404 X 414	4.240	4.139	4.850

DISCLAIMER

THIS INFORMATION IS PROVIDED AS A GENERAL GUIDE, INCLUDING DIMENSIONS. IT IS THE CUSTOMER'S RESPONSIBILITIES TO SELECT THE PROPER CONTAINER FOR PRODUCT AND APPLICATION COMPATIBILITY.

DISTRIBUTED BY: Pipeline Packaging

REF NO.: DWG30909

DESCRIPTION: 1 Quart Round Metal Can, Unlined