KINGSTON FAUCETURE

Steel Bathroom Console Sink Base with Glass Shelf

Installation Instructions

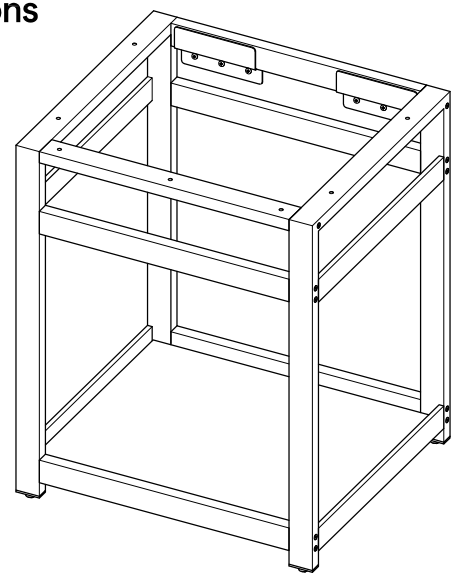

Parts:

☐Shape		Straight Tube			Gasket
A	B	C	D	E	F
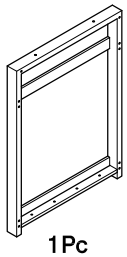	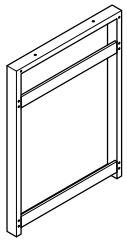	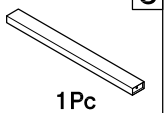	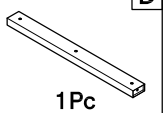	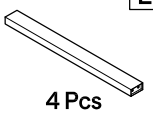	
1 Pc	1 Pc	1 Pc	1 Pc	4 Pcs	6 Pcs
		Screw	Bolt	Glass Shelf	Mounting Bracket
		Ø23.5mm G	1/4" x 75mm H	I	J
				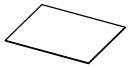	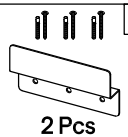
4 Pcs		20 Pcs		1 Pc	2 Pcs

www.kingstonbrass.com

TOLL-FREE CUSTOMER SERVICE: 1-877-2-KBRASS
TECHNICAL SUPPORT E-mail: service@kingstonbrass.com
12775 Reservoir Street, Chino, CA 91710

⚠CAUTION

Failure to follow all installation directions may cause product to detach from the wall and cause serious injury



⚠WARNING

Lifting hazard.

Single person lift could cause injury.
Use assistance when moving or lifting.

Tools Required

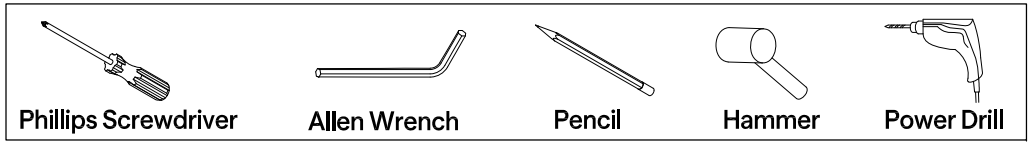

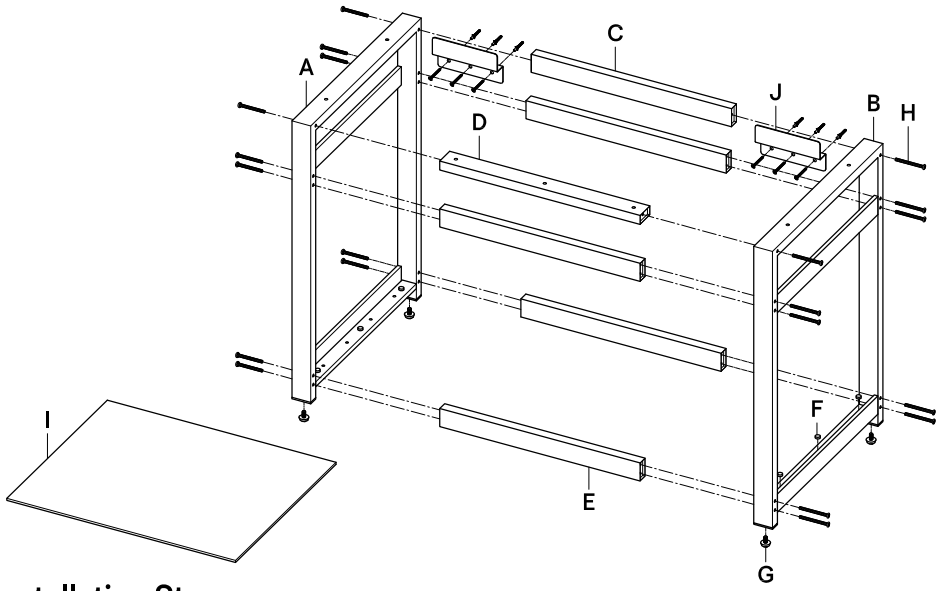

Installation Steps :

Step 1. Thread adjustable leg screws (Part G) to the bottom of Parts A & B.
Step 2. Now place the straight bars (Parts C and E), total 5 Bars in horizontal positions and secure with the Allen Key bolts (Part H) that are included.
Step 3. Next install the straight bar (Part D) on the top portion of the frame facing towards yourself with the 3-screw holes face upwards.
Step 4. Next, we will install the glass shelf. First, find the 6 pieces rubber gaskets (Part F) included, then apply 3 of them on each of the bottom insides of Parts A & B. You will then set the glass shelf (Part I) in the bottom of the main frame.
Step 5. Level entire structure by adjusting leg screws (Part G) as necessary.
Step 6. Once unit has been assembled place at the desired location and after leveling draw a line across the bottom of the top vertical beam (C).
Step 7. Remove the Console sink base, find the location of the wood studs and using the marked line as a guide to install support brackets at the location of the studs, make sure at least one of the screws is secured to the wood; you will need an anchor to secure from a secondary point in the bracket.
Step 8. The depth of wall drill hole for installing anchor should be 40mm (1-5/8") Min.
Step 9. Slide Console sink base into place and attach top sink.

Cleaning

Clean with a damp cloth only.
Avoid using metal or abrasive polishes.

©2025 LVC Kingston LLC. All Rights Reserved.
2025-05-D