ROWAN CORNER TV UNIT ASSEMBLY INSTRUCTIONS

Thank you for purchasing the ROWAN CORNER TV UNIT

Please read the instructions carefully to ensure safe operation of this product.

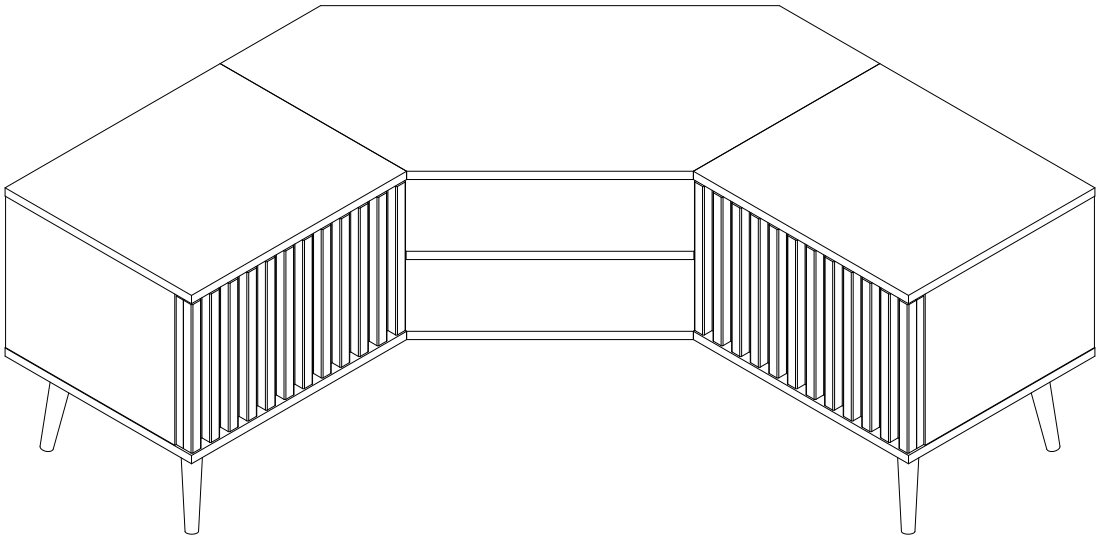

Size:161.5x39x51.5cm

PLEASE READ this sheet prior to assembly to familiarise yourself with the various stages of construction.

Carefully open the pack supplied and check the contents against the parts and fittings check list. Do not destroy any of the packaging until you are certain that you have all the necessary parts for the assembly.

CAUTION: There are small components used in the construction of this unit. These loose items should be kept away from young children whilst assembling your unit to avoid the danger of choking.

Tools Required

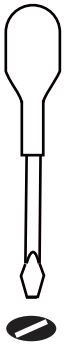

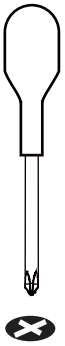

Number of people



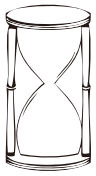

2 Hour
Set Up

IMPORTANT - READ CAREFULLY - RETAIN THESE INSTRUCTIONS FOR FUTURE REFERENCE.

INFORMATION

- This unit is Designed to support a TV of maximum weight 35kg. Suitable for TV screen sizes upto 32 Inches.
- Do not exceed this weight.
- We recommend that this unit is assembled in the room intended for use.
- When you are ready to start, make sure that you have the right tools, plenty of space and a clean, dry area for assembly.
- Unwrap all packaging materials and place the components on top of the carton box or on a clean floor to prevent any accidental scratching.
- Check the pack and make sure you have all the parts listed.
- Ensure that this product is fully assembled as illustrated before use.
- Check all screws or bolts are tightened and inspect regularly
- Tools not included unless specified in parts list.

WARNINGS

- This product should only be used on a firm and level floor.
- Keep small parts out of reach of children.
- Make sure the legs remain in contact with the floor.
- DO NOT use power tools to construct this product.
- DO NOT over-tighten screws or bolts.
- DO NOT use this product if parts are missing, damaged or worn.
- DO NOT sit or stand on the product.
- DO NOT place hot or Warm objects on the surface as these may damage the Product . Always use a suitable heat resistant mat.

CARE INFORMATION

- Never use scourers, abrasives or chemical cleaners.
- To clean, wipe with a damp sponge and warm soapy water.
- Do not use solvent based cleaners or detergents as they can bleach or damage the product.

Parts and Fittings Checklist

Please check the pack contents before assembling the product. If any components are missing, please contact your retailer.

The fittings pack contains small items that should be kept away from children.

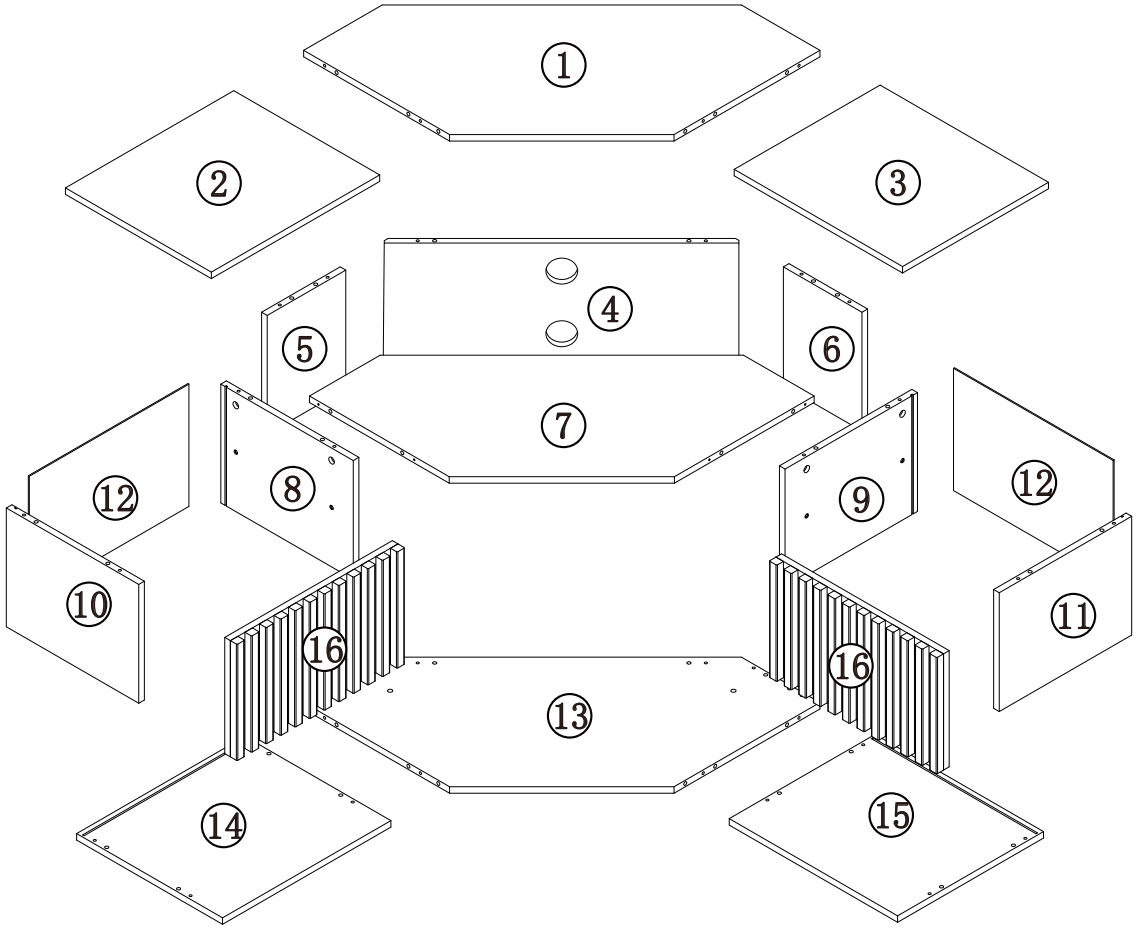

General Hints & Tips

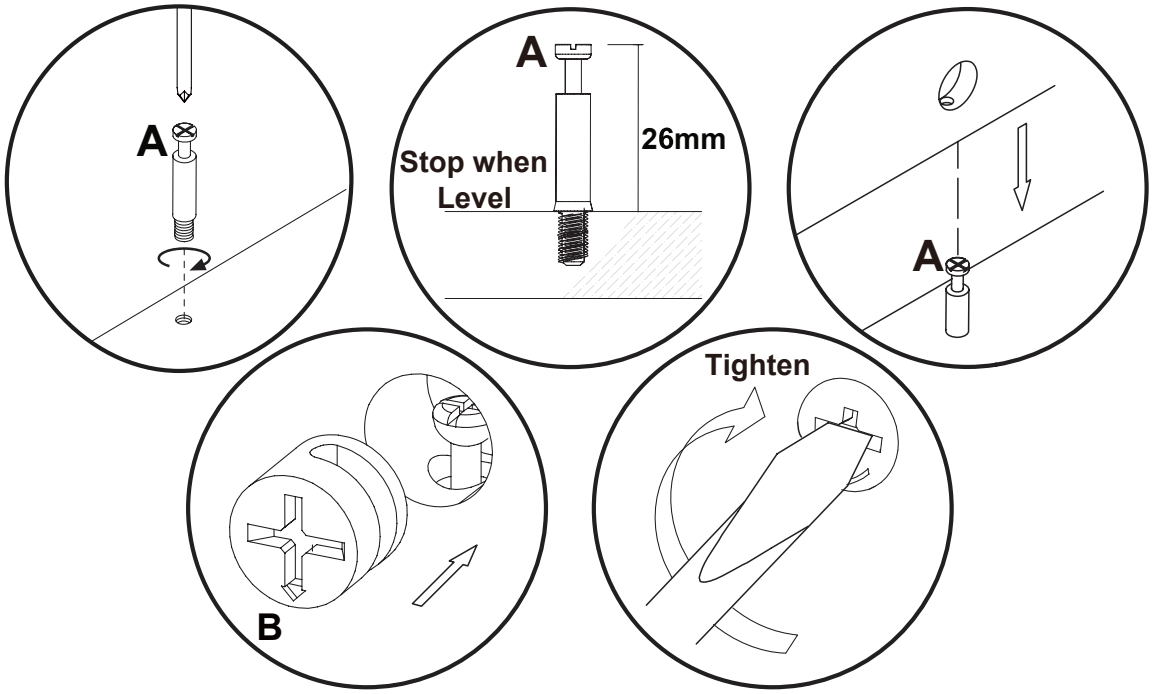

All parts are packed in one carton

1	2	3
Description: CENTRAL TOP PANEL Qty: 1 Size: 425x967x15mm Carton No: 1/2	Description: LEFT TOP PANEL Qty: 1 Size: 390x450x15mm Carton No: 2/2	Description: RIGHT TOP PANEL Qty: 1 Size: 390x450x15mm Carton No: 2/2
4	5	6
Description: BACK PANEL Qty: 1 Size: 275x678x15mm Carton No: 1/2	Description: REAR LEFT BACK PANEL Qty: 1 Size: 210x275x15mm Carton No: 1/2	Description: REAR RIGHT BACK PANEL Qty: 1 Size: 210x275x15mm Carton No: 1/2
7	8	9
Description: SHELF Qty: 1 Size: 397x953x15mm Carton No: 1/2	Description: MIDDLE LEFT SIDE PANEL Qty: 1 Size: 353x275x15mm Carton No: 2/2	Description: MIDDLE RIGHT SIDE PANEL Qty: 4 Size: 353x275x15mm Carton No: 2/2
10	11	12
Description: LEFT SIDE PANEL Qty: 1 Size: 353x275x15mm Carton No: 2/2	Description: RIGHT SIDE PANEL Qty: 1 Size: 353x275x15mm Carton No: 2/2	Description: SIDE BACK PANEL Qty: 2 Size: 283x426x2.7mm Carton No: 1/2
13	14	15
Description: CENTRAL BOTTOM PANEL Qty: 1 Size: 425x976x15mm Carton No: 1/2	Description: LEFT BOTTOM PANEL Qty: 1 Size: 390x450x15mm Carton No: 2/2	Description: RIGHT BOTTOM PANEL Qty: 1 Size: 390x450x15mm Carton No: 2/2
16		
Description: SLATTED DOOR Qty: 2 Size: 268x448x33mm Carton No: 2/2		

Fittings (to scale)

Code	Item	Quantity
A	CAM BOLT (7x39mm)	14
B	CAM NUT	22
C	DOWEL (8x30mm)	32
D	SCREW (3.5x14mm)	20
E	SCREW (5x40mm)	18
F	SCREW (4x14mm)	20
G	DOWEL (8x50mm)	12
H	CAM BOLT (7x48mm)	8

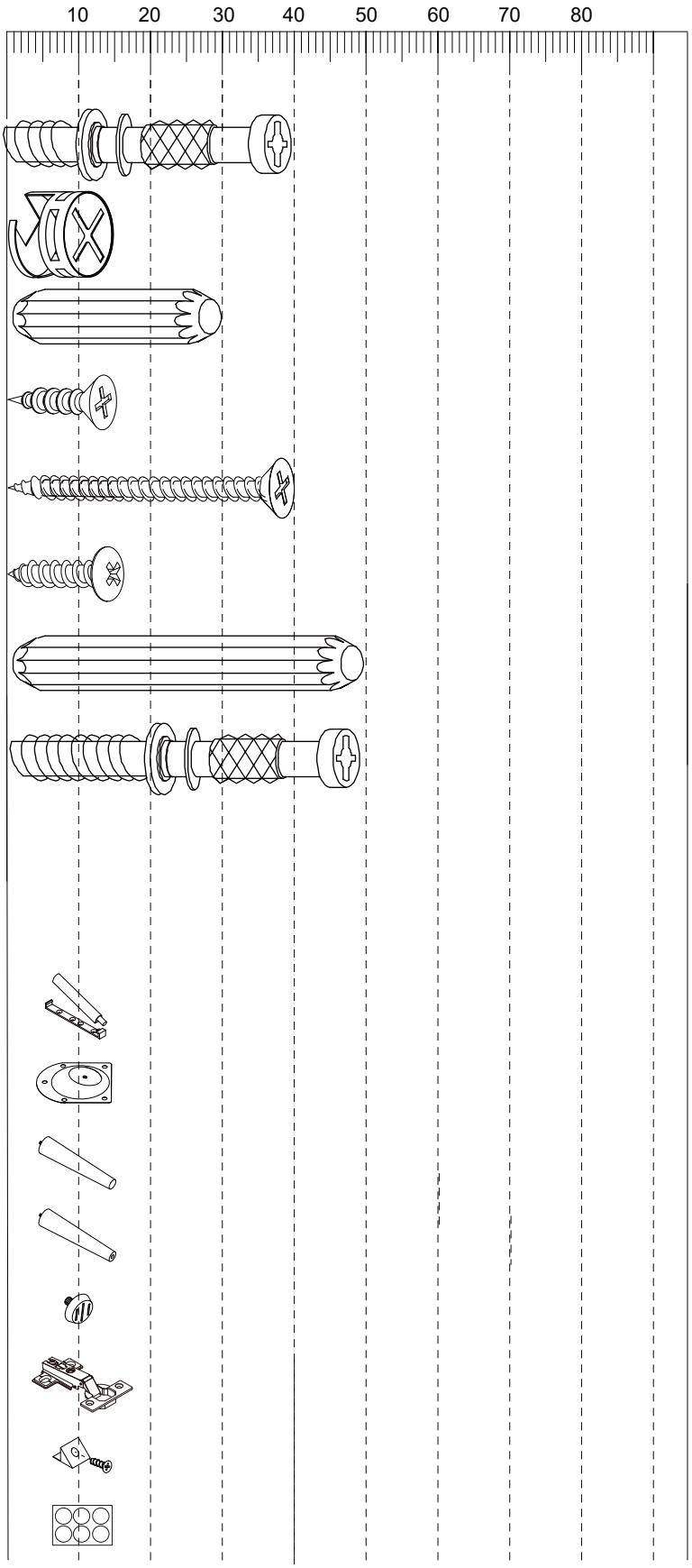

Fittings (not to scale)

Code	Item	Quantity
I	DOOR REBOUNDER	2
J	METAL PLATE	4
K	LEG (Ø40xØ25x200mm)	4
L	LEG (Ø40xØ25x200mm)	2
M	ADJUSTABLE PLASTIC GLIDE	2
N	HINGE	4
O	CORNER FIXING	8
P	STICKERS	1

STEP 1

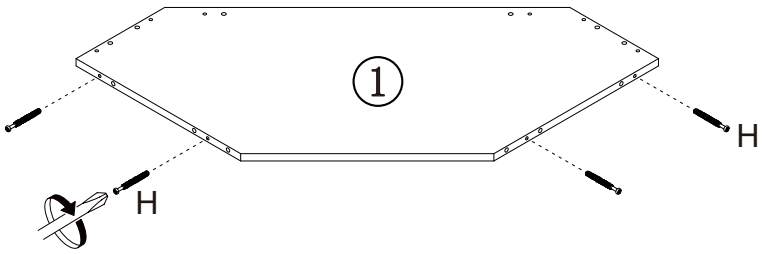

For this step:

Tools required

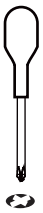

Fittings required



H x 4

STEP 2

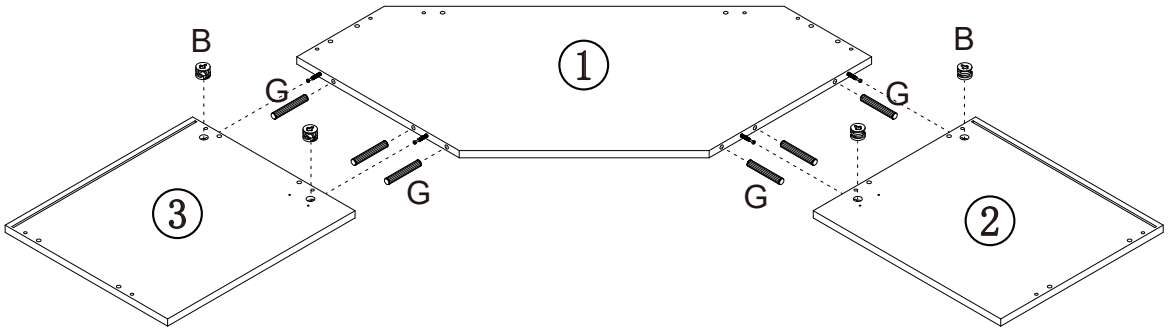

For this step:

Tools required



Fittings required



B x 4



G x 6

STEP 3

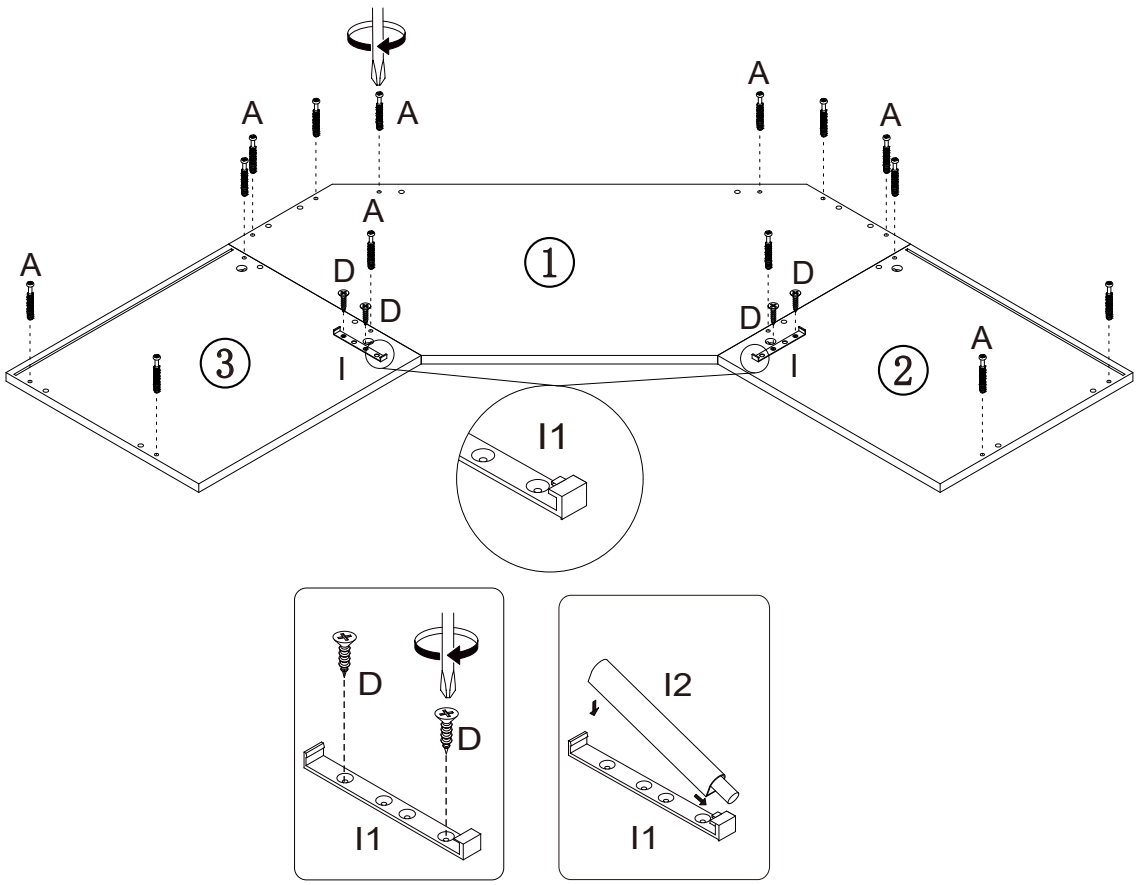

For this step:

Tools required

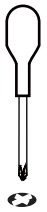

Fittings required



A x 14



D x 4



I x 2

STEP 4

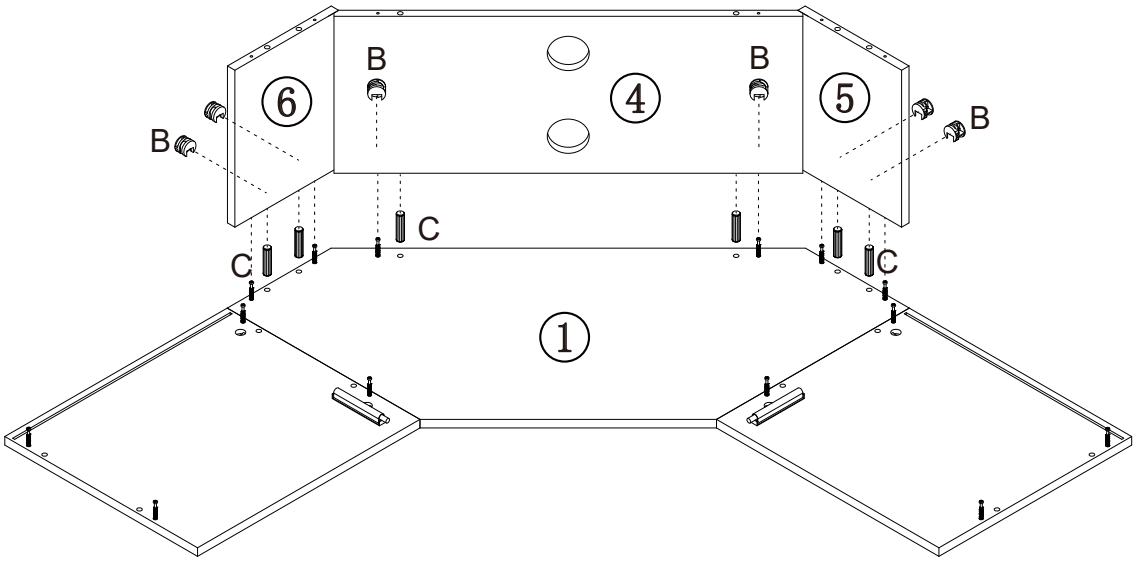

For this step:

Tools required



Fittings required

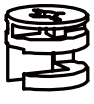

B x 6

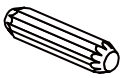

C x 6

STEP 5

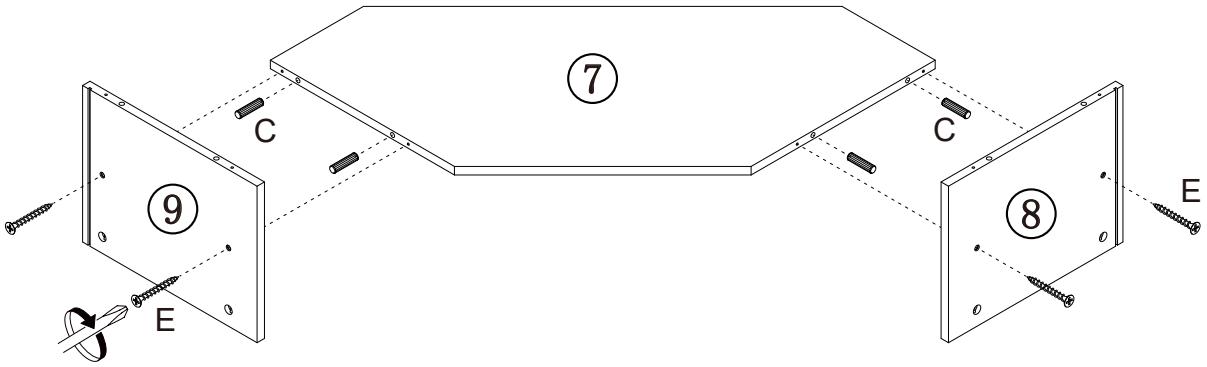

For this step:

Tools required

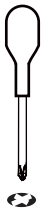

Fittings required

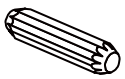

C x 4

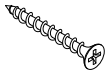

E x 4

STEP 6

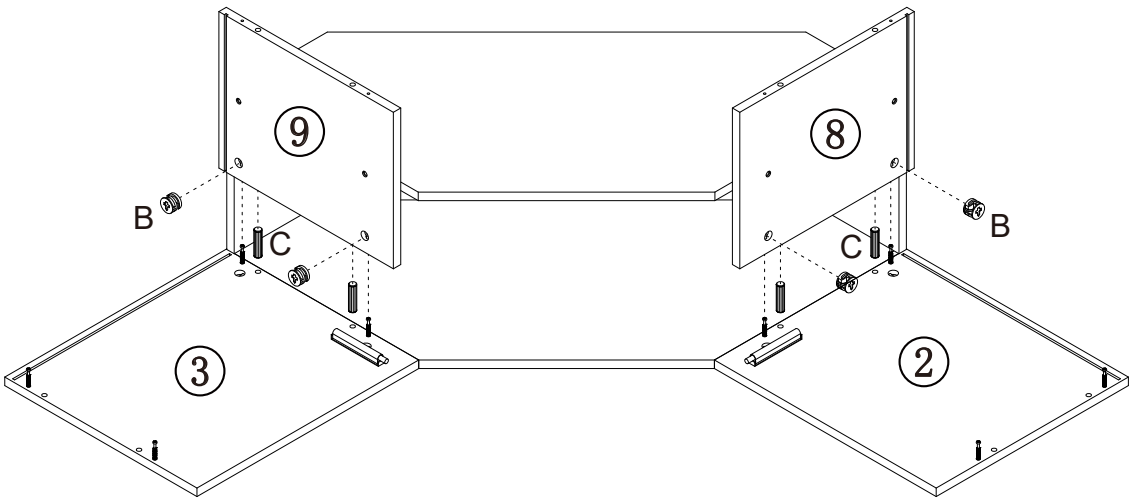

For this step:

Tools required



Fittings required



B x 4



C x 4

STEP 7

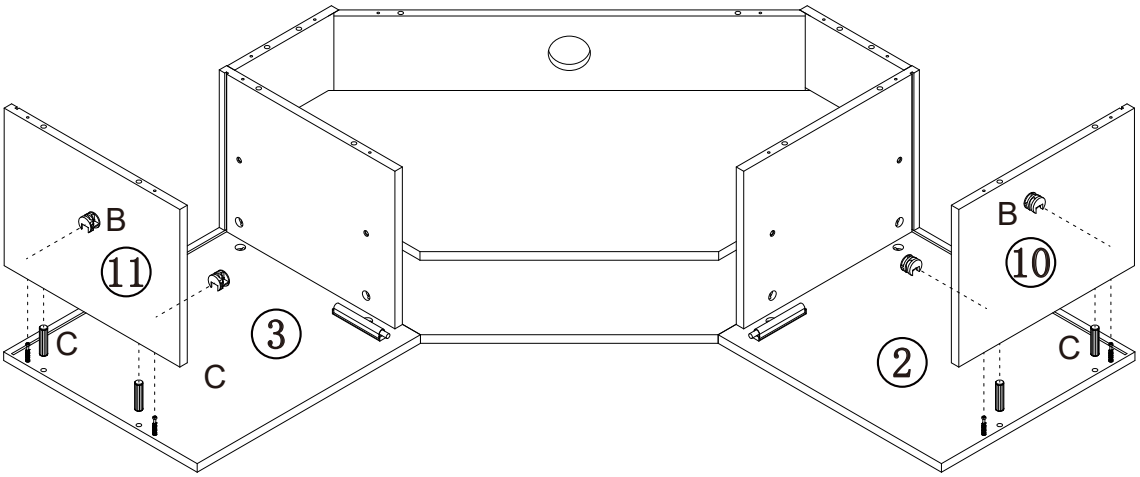

For this step:

Tools required



Fittings required



B x 4

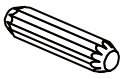

C x 4

STEP 8

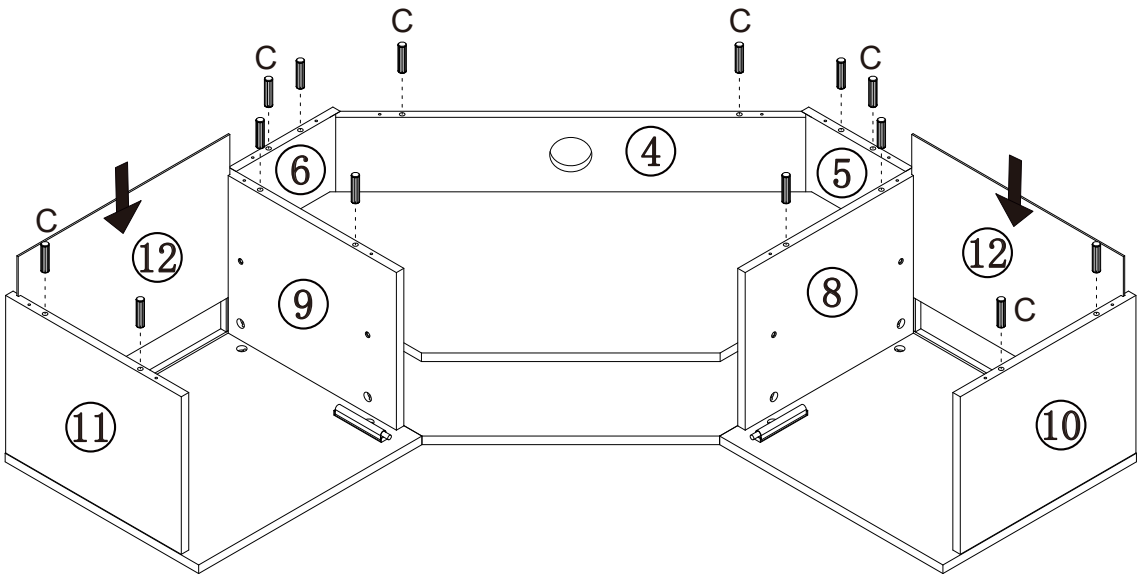

For this step:

Tools required

Fittings required

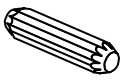

C x 14

STEP 9

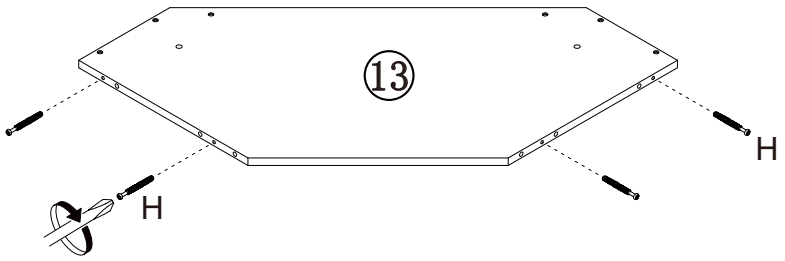

For this step:

Tools required

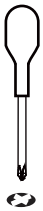

Fittings required



H x 4

STEP 10

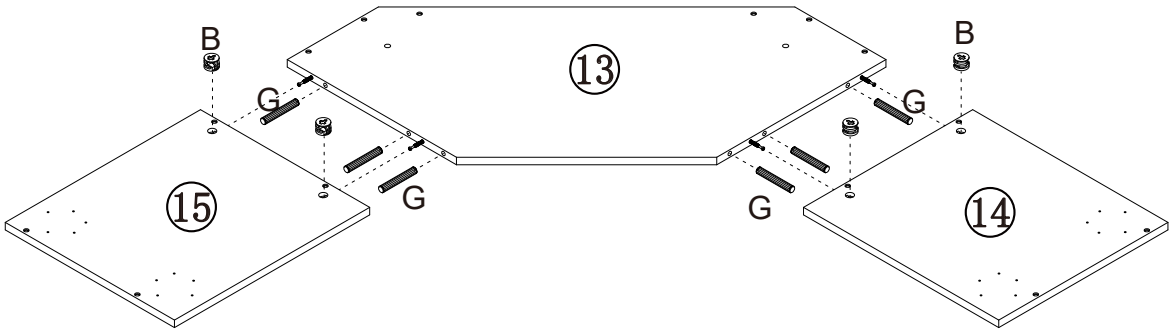

For this step:

Tools required



Fittings required



B x 4

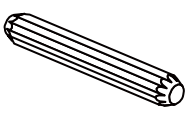

G x 6

STEP 11

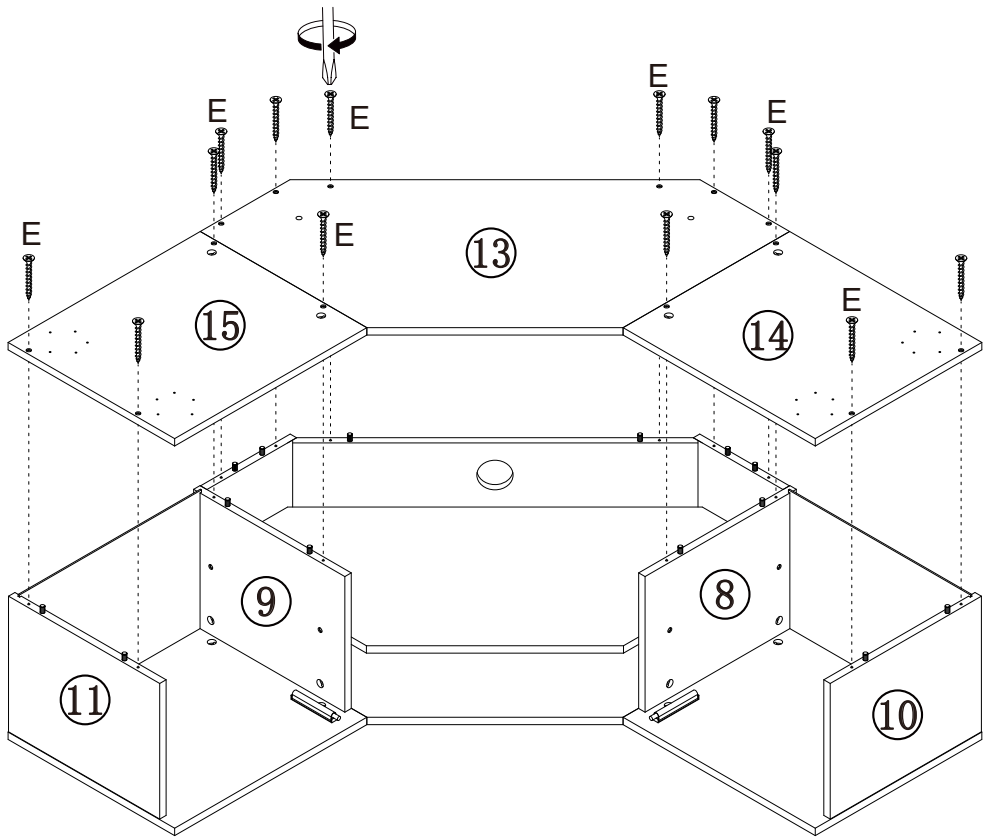

For this step:

Tools required

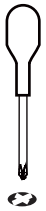

Fittings required

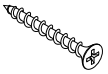

E x 14

STEP 12

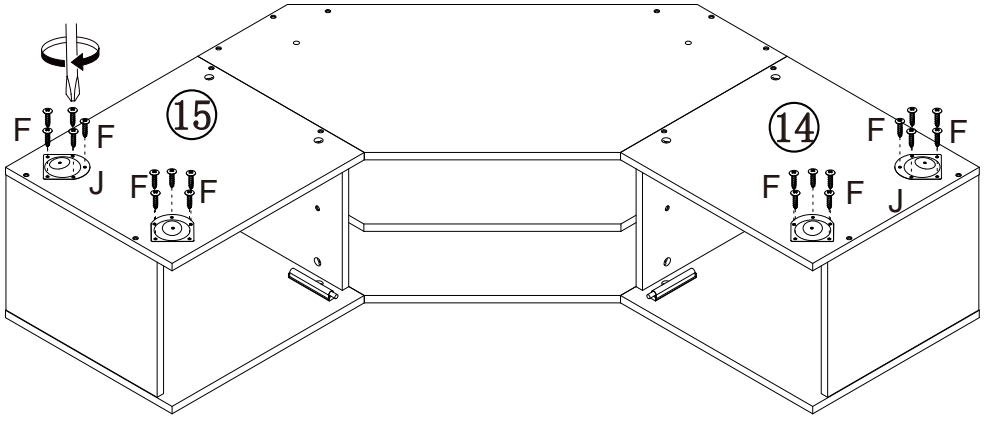

For this step:

Tools required

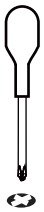

Fittings required



F x 20

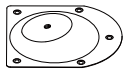

J x 4

STEP 13

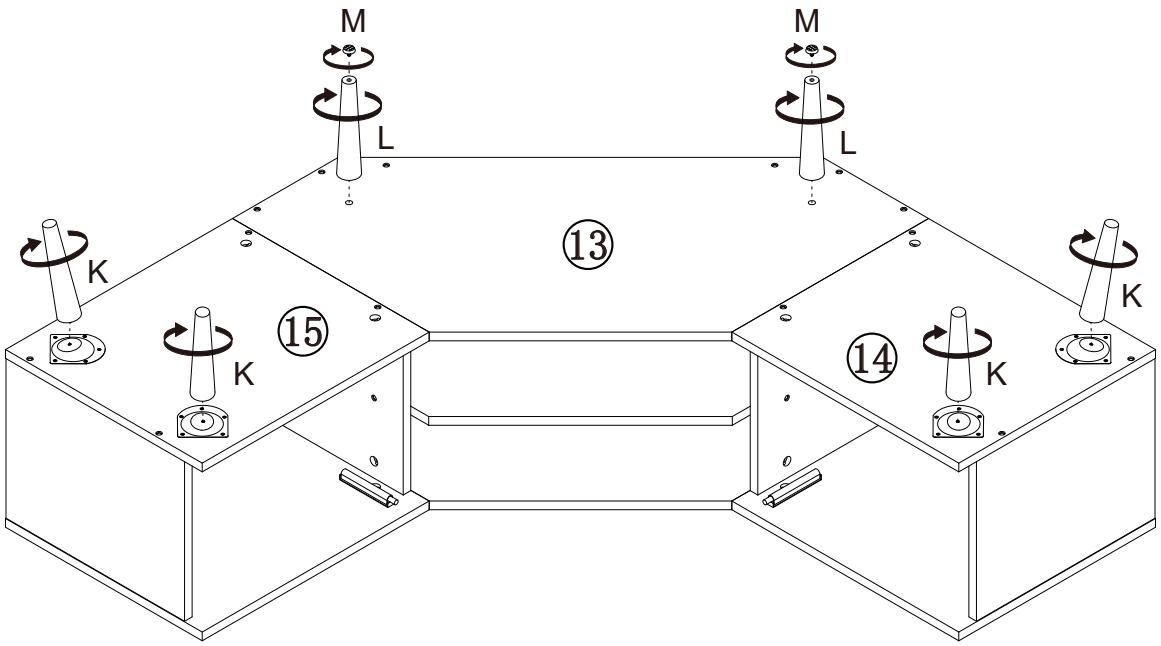

For this step:

Tools required

Fittings required

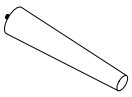

K x 4

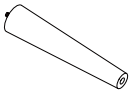

L x 2



M x 2

STEP 14

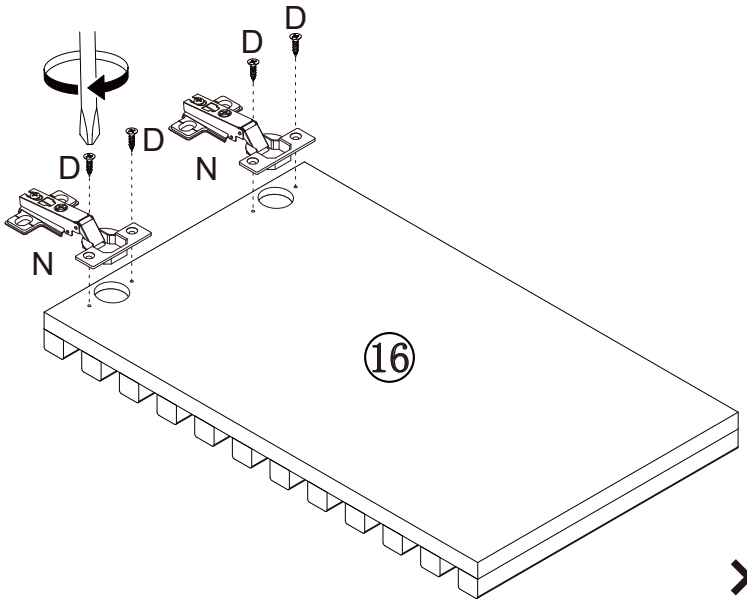

× 2

For this step:

Tools required

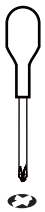

Fittings required



D x 8

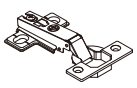

N x 4

STEP 15

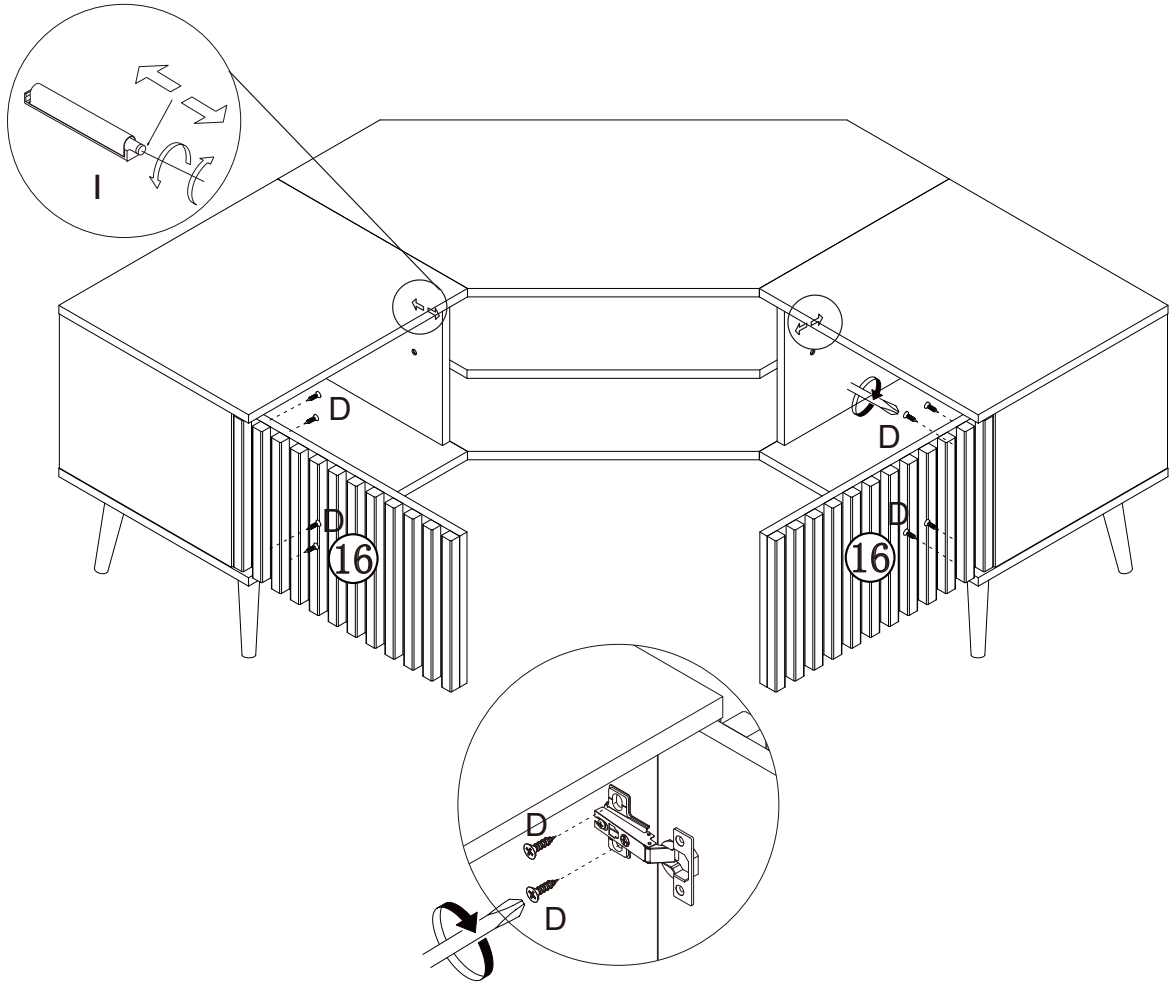

For this step:

Tools required

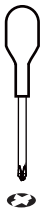

Fittings required



D x 8

STEP 16

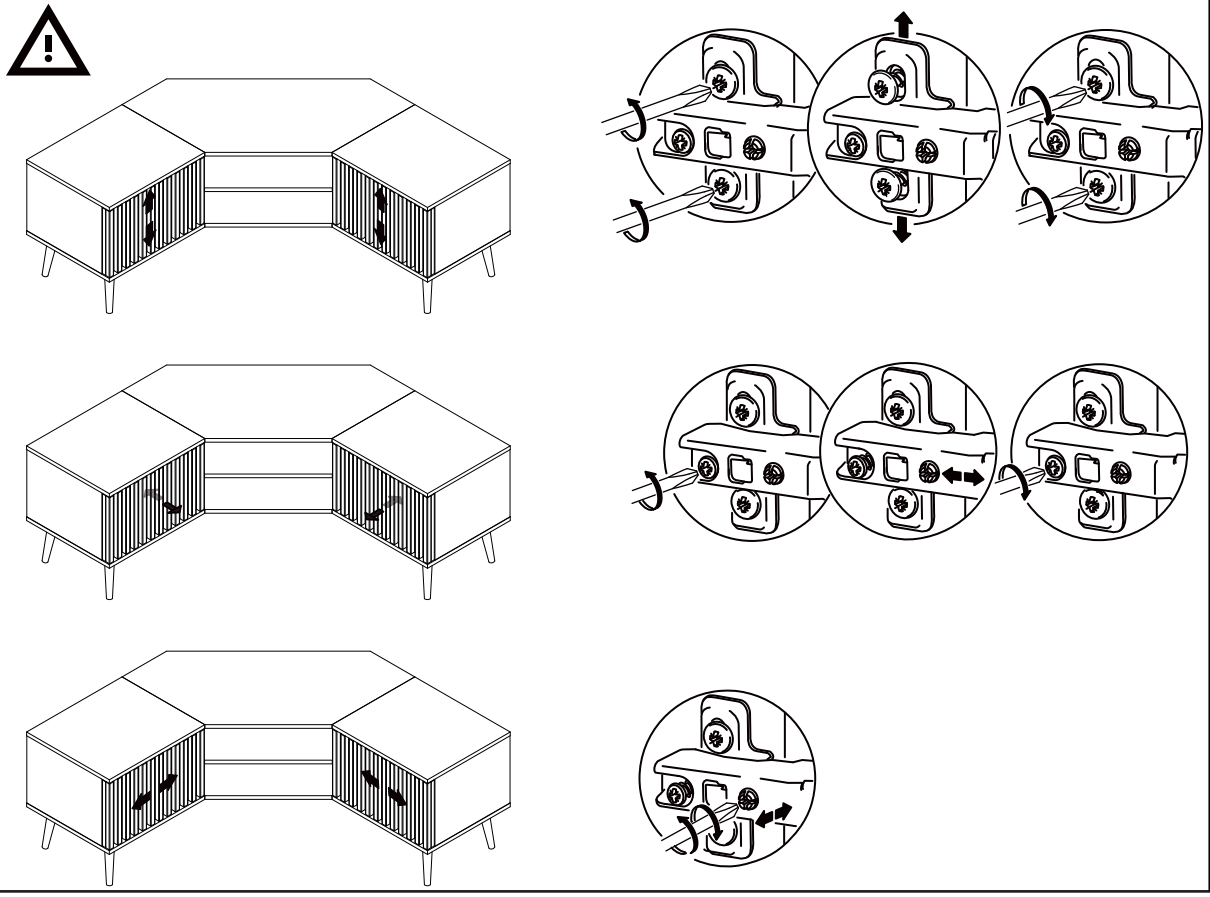

For this step:

Tools required

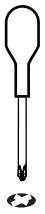

Fittings required

STEP 17

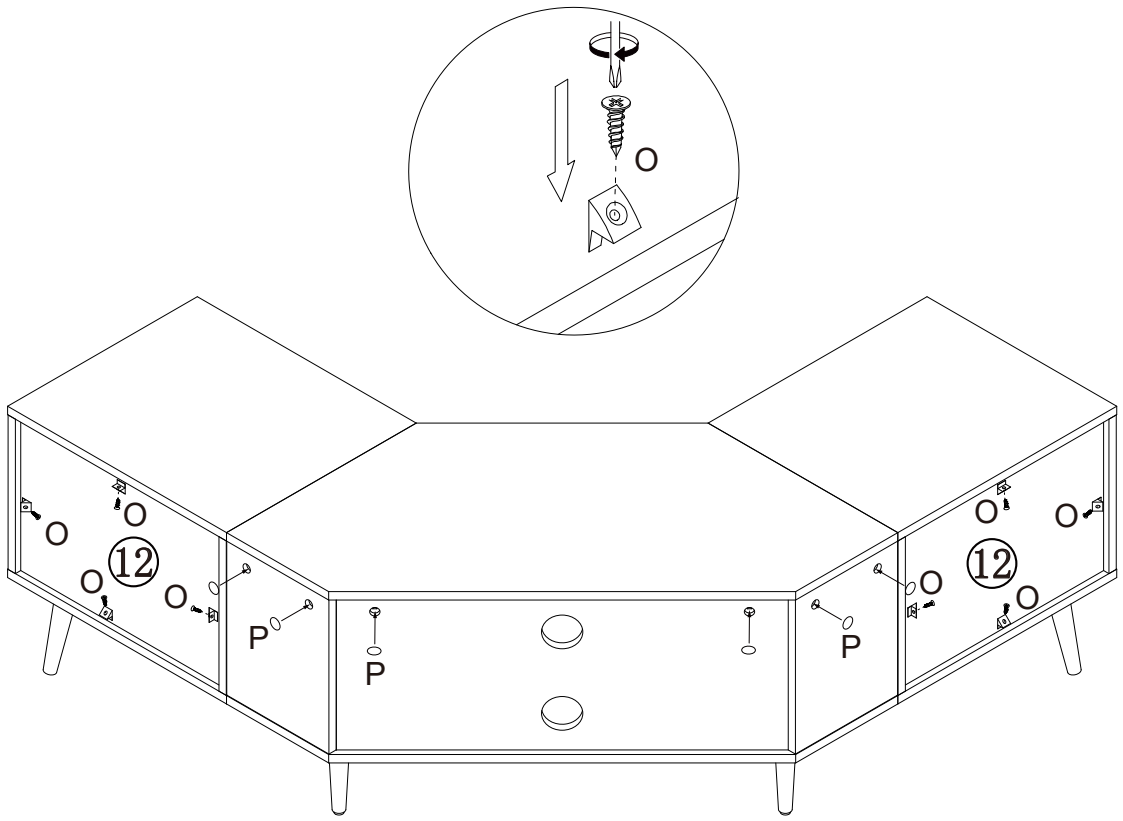

For this step:

Tools required

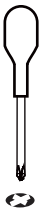

Fittings required



O x 8



P x 1

STEP 18

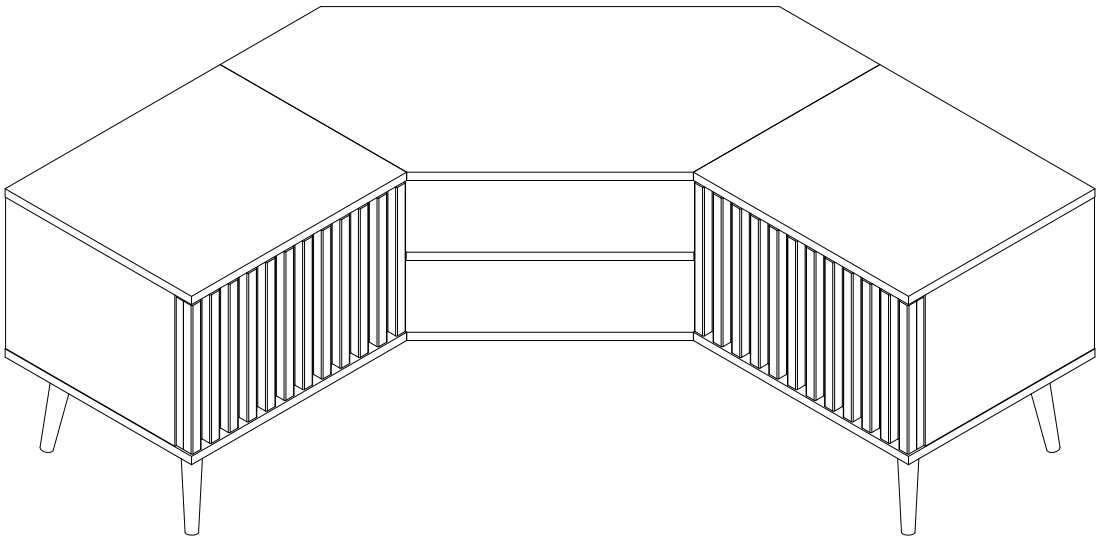

For this step:

Tools required

Fittings required

Assembly Completed

Your ROWAN CORNER TV UNIT is now completely assembled.
Periodically check to ensure that the components are in their proper position, free from damage.
Also, make sure the connectors are tight and secure.

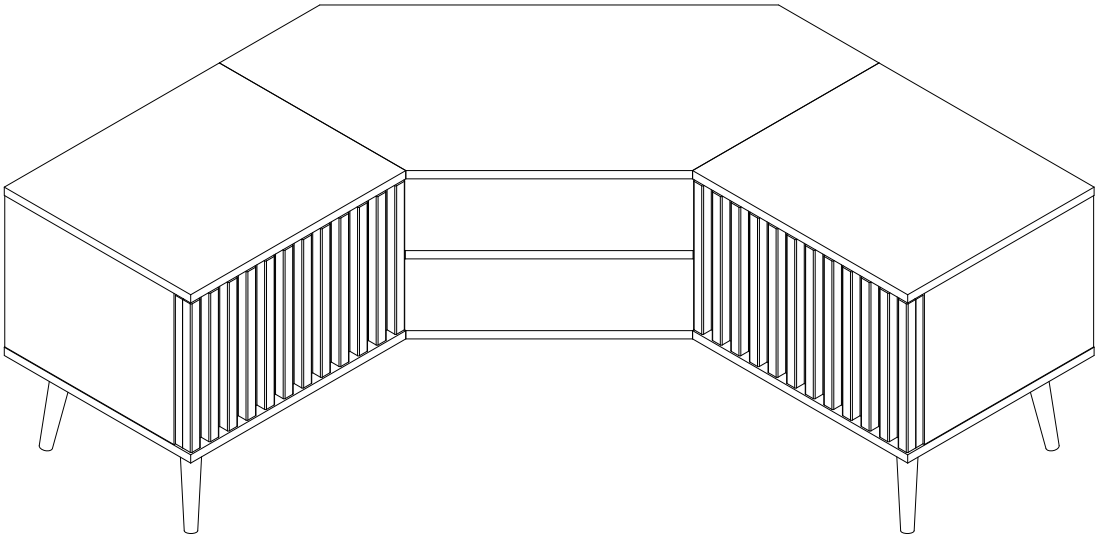

Keep instructions for future reference

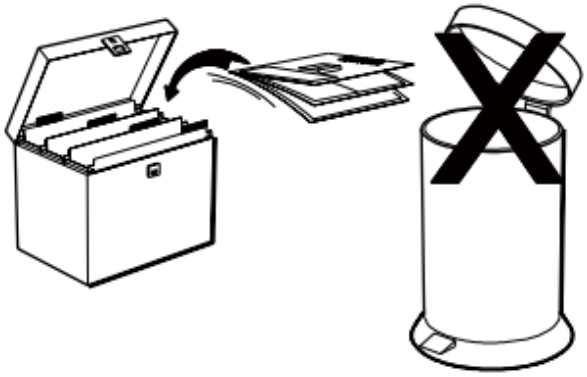

Represented by:
Authorised Rep Compliance Ltd
71 Lower Baggot Street
Dublin
D02 P593
Ireland
www.arccompliance.com

Supplied by:
GFW The Furniture Warehouse
Waterside Distribution Centre
Waterside Business Park
Johnson Road
Lancashire
BB3 3RT
www.gfwlimited.co.uk