KINGSTON

TO ORDER PARTS, CALL: 1-877-252-7277
www.kingstonbrass.com

KS821C

Single Handle Widespread Kitchen Faucet with Sprayer

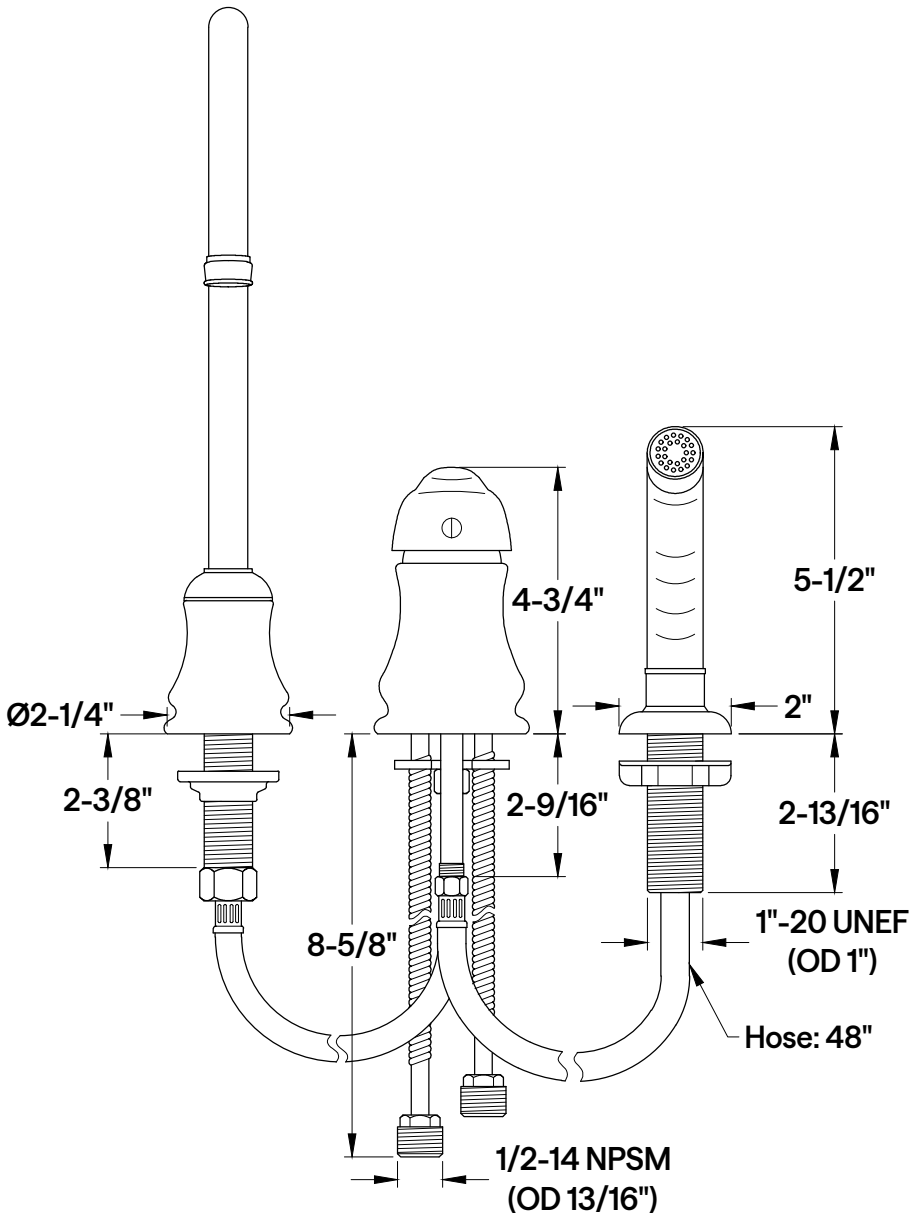

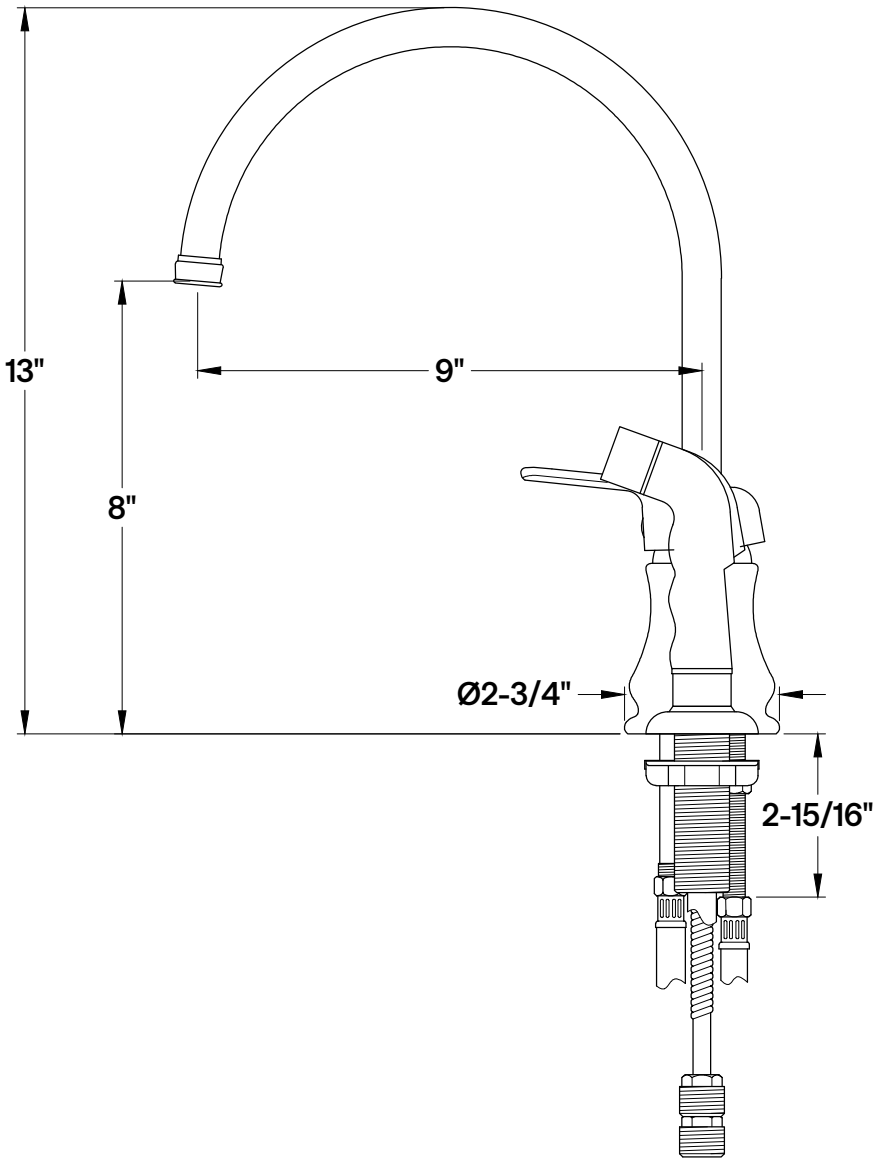

2025-10-B