CAFÉ™ Professional Series 30" Built-In Convection French Door Double Wall Oven

CTD90FP4ZW2 / CTD90FP3ZD1 / CTD90FP2ZS1

CAFÉ

ALSO AVAILABLE IN

CTD90FP3ZD1
Matte Black
with Brushed
Stainless handles

CTD90FP2ZS1
Stainless Steel
with Brushed
Stainless handles

This model requires a one-time WiFi connection to download oven features and functionality enabled by software. Follow instructions on your LCD screen on how to connect.

FEATURES & BENEFITS

Professional design brought to life – Bring unparalleled sophistication to your kitchen with a French door wall oven that exudes professional style and allows you to personalize the look with customizable handles and finishes

French door design for more approachable access – allows you to open both doors using a single hand and easily place food inside

The perfect bake is now perfectly easy – Achieve unrivaled performance with the only system that delivers top-down true convection for consistent results on special occasion favorites like roasts, chicken, turkey and more

Fried taste. Crisp texture. Less oil. – Make your favorite "fried" foods healthy, thanks to Air Fry Mode that crisps without using oil for frying

Precision is the name of your cooking game – Confidently try new recipes and perfectly execute your favorites, using a smart system that automatically tracks progress, modifies temperatures and adjusts cook times

No preheat, no hassle – Save time with a variety of precision cooking modes that eliminate the need for preheating

Brighten up life in the kitchen – Easily navigate wall oven settings using a stunning full-color display that adds an unexpected touch of style to your kitchen

Customize your cooking with this smart oven shortcut feature, saving your most frequently used cooking modes for instant access. Seamlessly blend innovation and efficiency so you can focus on what truly matters – creating, entertaining, and enjoying

Enjoy convenient temperature control from anywhere – Preheat while running errands or change oven temperatures while doing yard work with the Smart HQ™ App

Say goodbye to guesswork with integrated tools that let you set and label unlimited timers, add recipes and video content

Create a look that matches your personal style – Select any combination of premium finishes and hardware options to create a stunning look customized to any owner's taste

Say hello to cooking in style with built-in premium Bluetooth® speaker. Easily connect your smartphone to stream your favorite music or podcasts, turning every meal into a more enjoyable, immersive experience

APPEARANCE

Handle	CAFÉ Pro Style Customizable
Installation	Above Warming Drawer Side-by-Side

FEATURES

Configuration	French Door
Cooking System	True European Convection with Direct Air (Both Ovens)
Oven Cleaning Type	Self-Clean with Steam Clean Option
Cleaning Time	Variable with Delay Clean Option
Oven Cooking Modes	Convection Bake Convection Bake Multi-Rack Convection Broil Hi/Lo Convection Roast Thermal Bake Thermal Broil Hi/Lo Keep Warm Proof
Precision Cooking Modes	Artisan Pizza Mode Turkey Mode Steak Mode And More ...
Control Type	7" Full-Color Touch LCD Screen
Oven Rack Features	3 Heavy Duty Roller Racks 1 Heavy Duty Flat Rack 6 Embossed Rack Positions (Per Oven)
Oven Control Features	12-Hour Shut-off Capability Control Lock Capability C° or F° Programmable Delay Time Unlimited Timers Mis-Wire Detection OU Sabbath Mode Premium Speaker Temperature Probe
Connected Capabilities via WiFi	Recipes Cooking instruction Grocery list/shop Streaming Audio Personalized Wallpaper Remote Control Weather
Oven Interior	2 Halogen Interior Oven Lights (Both Ovens) Black Gloss Finish Hidden Bake

CAPACITY

Total Capacity (cubic feet)	10.0
Capacity (Cu. Ft.)	5.0 Upper / 5.0 Lower

POWER / RATINGS

Amp Rating at 208V	40
Amp Rating at 240V	40
Bake Wattage	2850W
Broiler Wattage	4300W
Convection Wattage	2400W
KW Rating at 208V	6.8
KW Rating at 240V	9

WEIGHTS & DIMENSIONS

Approximate Shipping Weight	398
Net Weight	370
Overall Height	51 5/32
Overall Width	29-3/4
Overall Depth	26-3/4
Cabinet Width	30
Cutout Dimensions (W x H x D) (in.)	28-1/2 x 51-13/16 x 23-1/2 (With Pedestal Rails) 28-1/2 x 50-1/4 x 23-1/2 (Without Pedestal Rails)
Oven Interior Dimensions (lower)	25 x 17-3/8 x 20-1/4
Oven Interior Dimensions (upper)	25 x 17-3/8 x 20-1/4

CAFÉ™ Professional Series 30" Built-In Convection French Door Double Wall Oven

CTD90FP4ZW2 / CTD90FP3ZD1 / CTD90FP2ZS1

OPTIONAL ACCESSORIES

30" Never-Scrub Roller Rack	UXWORXR30

WARRANTY

Parts Warranty	Limited 1-Year Entire Appliance
Labor Warranty	Limited 1-Year Entire Appliance
Warranty Notes	See Written Warranty for Full Details

DIMENSIONS AND INSTALLATION INFORMATION (IN INCHES)

Most 30" Wall Cabinets can be used with this unit

Note: These ovens are not approved for stackable installations. Cabinets installed adjacent to wall ovens must have an adhesion spec of at least a 194°F temperature rating.

Door handle protrudes 2-1/2" from door face. Cabinets and drawers on adjacent 45° and 90° walls should be placed to avoid interference with the handle.

Electric wall ovens are not approved for installation with a plug and receptacle. They must be hard wired in accordance with installation instructions.

Installation Information:
Before installing, consult installation instructions packed with product for current dimensional data and for alternate installation options.
Note: A minimum gap of 14" from either side of the wall oven to an adjacent 45 or 90 cabinet, drawer or was is required to avoid interference with the opening of the doors. The handles protrude 2-1/2" from the door face.

Countertops may need to be notched on either side of the wall oven to avoid interference with the opening of the doors.

THIS MODEL IS NOT APPROVED FOR FLUSH-MOUNT INSTALLATION

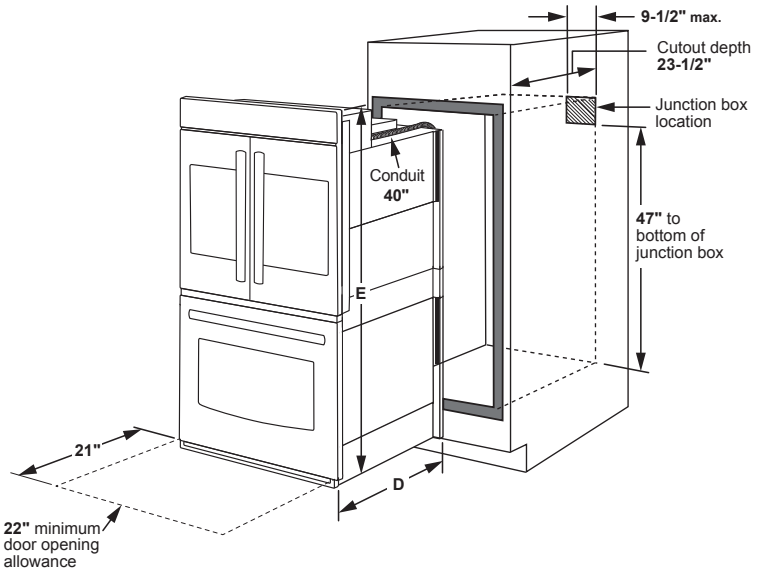

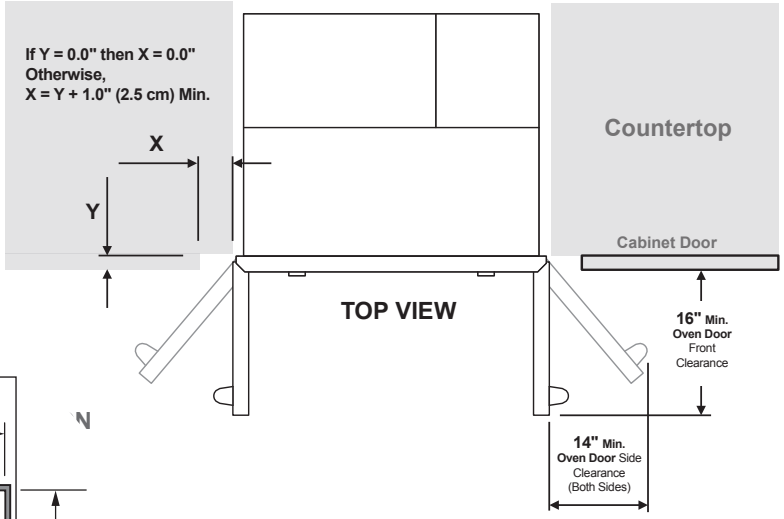

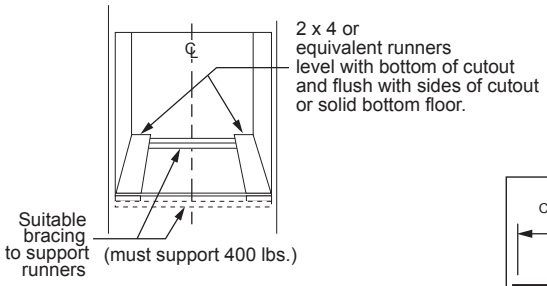

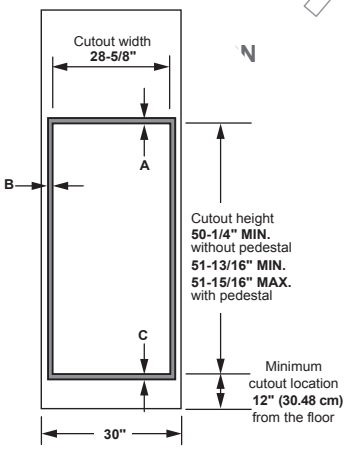

Cabinet	30"
A - Overlap of oven at top of cutout	1-1/4"
B - Overlap of oven other side of edge of cutout	3/4"
C - Overlap of oven at bottom of cutout	1-1/4"
Oven	
D - Install depth	23-1/2"
E - Overall height with trim	51 5/32"
F - Overall width	29-3/4"

DIMENSIONS AND INSTALLATION INSTRUCTIONS ARE SHOWN IN INCHES

CAFÉ™ Professional Series 30" Built-In Convection French Door Double Wall Oven

CTD90FP4ZW2 / CTD90FP3ZD1 / CTD90FP2ZS1

DIMENSIONS AND INSTALLATION INFORMATION (IN INCHES)

Note: 30" double electric wall ovens are approved for installation above 27" and 30" warming drawers.

Attention installer: Electric wall ovens are NOT approved for installation with a plug and receptacle. They must be hard wired into an approved junction box.

Important: Before installing, consult installation instructions packed with ALL products for current dimensional and combination data.

When to use the pedestal rails: When replacing an older GE Appliances 30" double wall oven with a new GE Appliances model. Cutout height = 51-13/16" to 51-15/16". This is our traditional cutout height.

When not to use the pedestal rails:
When replacing a 30" double wall oven from another manufacturer (i.e., Whirlpool) with a new GE Appliances model. Cutout height = 50-1/4". You will need to verify that the existing cutout matches the 50-1/4" dimension.

If the new GE Appliances 30" double wall oven is being installed into new construction (i.e., not a replacement), then the recommended installation is to use the pedestal rails.

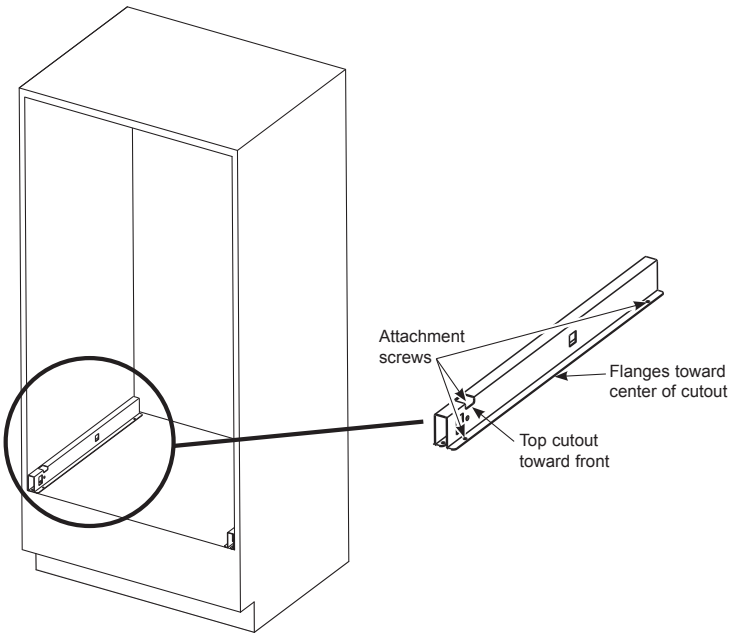

ADDITIONAL ACCESSORIES

CXWDFHKPMBZ
Brushed Bronze
3 handles
(Standard on Matte White)

CXWDFHKPMSS
Brushed Stainless
3 handles
(Standard on Matte Black)

CXWDFHKPMBT
Brushed Black
3 handles

CXWDFHKPMCU
Brushed Copper
3 handles

CXWDFHKPMCG
Brushed Brass
3 handles

CXWDFHKPMFB
Flat Black
3 handles

© 2026 GE Appliances