SYMMONS® Birch®

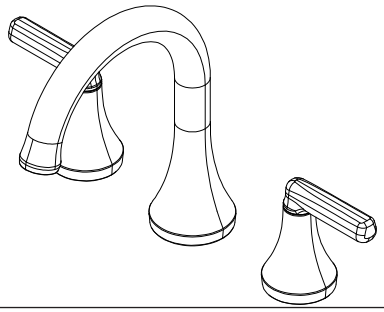

Two Handle Widespread Lavatory Faucet Parts Breakdown Document

Model Numbers

☐ **SLW5912PP:** Two Handle Widespread Lavatory Faucet

Parts Breakdown

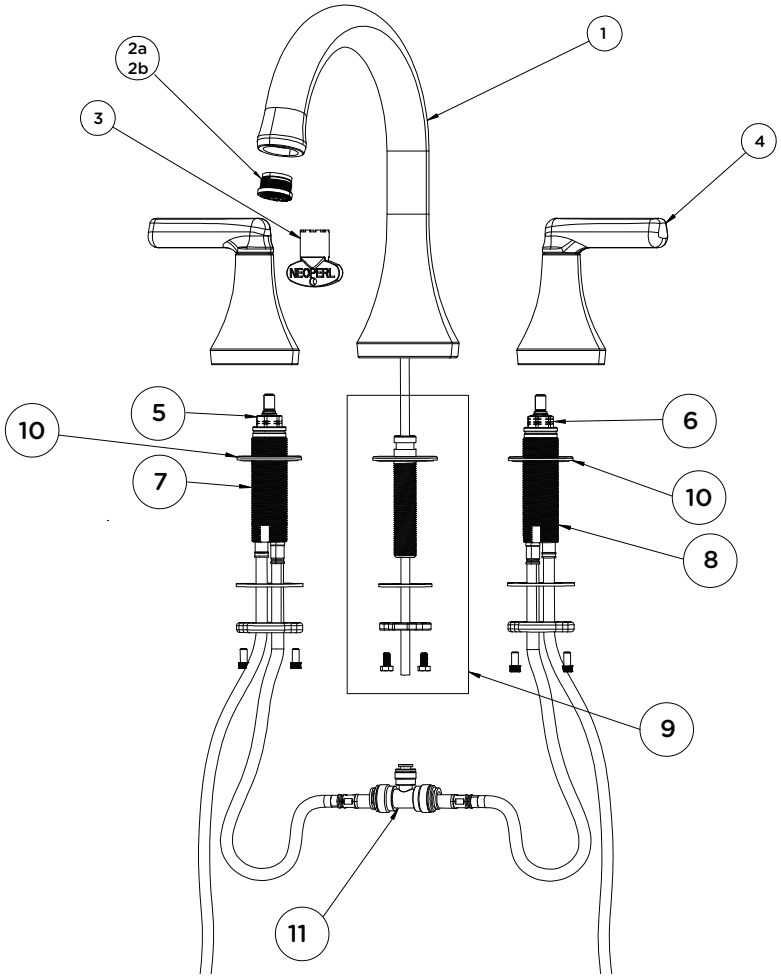

#	Description	Part Number
1	Spout Trim Kit	RL360
2a 2b	1.0 GPM Aerator 0.5 GPM Aerator	FLR13610 FLR13605
3	Aerator Removal Tool	RL341
4	Handle Trim Kit	RL361
5	Hot Cartridge	KN-114
6	Cold Cartridge	KN-113
7	Valve Body Hot 3/8"	RL344
8	Valve Body Cold 3/8"	RL345
9	Spout Rough-in	RL326
10	Valve Flanges	RL327
11	Push-in Tee	RL328
12	Push Pop Up Drain	RL324*

*Part requires finish modifer

Finish Modifiers:

STN - Satin Nickel finish

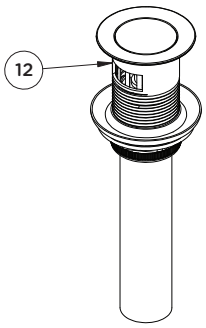

Symmons Industries, Inc. ■ 31 Brooks Drive ■ Braintree, MA 02184 ■ Phone: (800) 796-6667 ■ Fax: (800) 961-9621
Copyright © 2024 Symmons Industries, Inc. ■ symmons.com ■ gethelp@symmons.com ■ ZV-4075 REV 0 ■ 082024