ASSEMBLY INSTRUCTION

Coffee Table

48"Lx24"Wx18"H

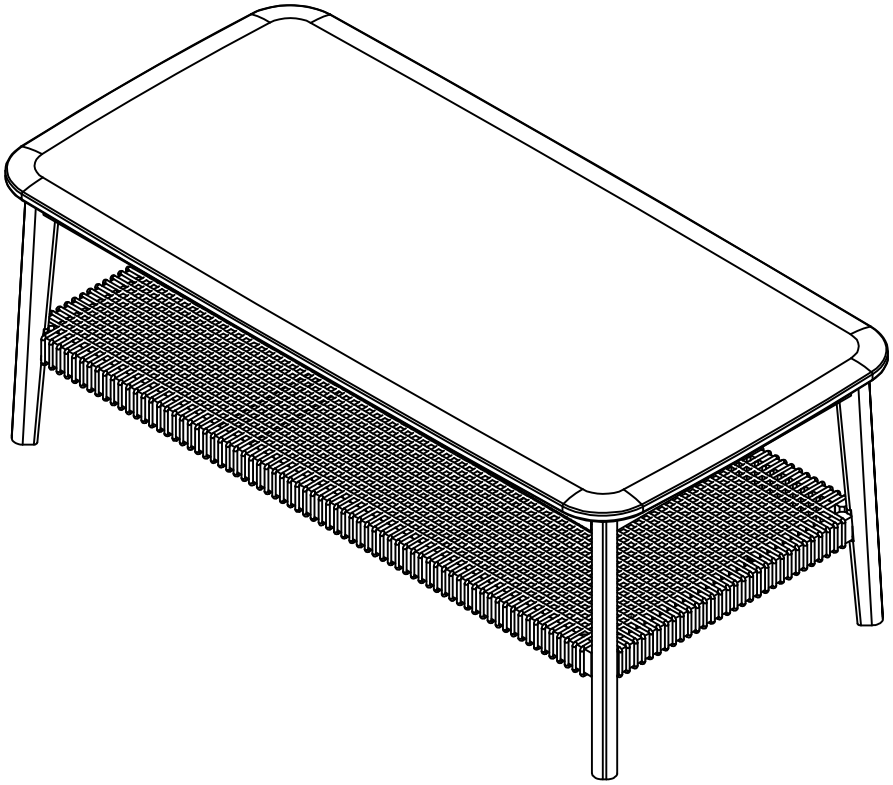

REPLACEMENT PARTS

Please do not contact the company purchased from as we can help you faster.
Order replacement parts and hardware at " www.boltonfurniture.com "

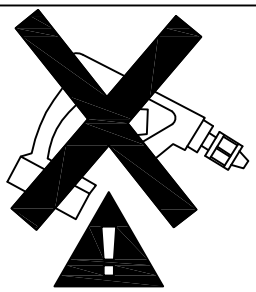

. Use of power tool to assemble this product will invalidate any claim and damage this product making it unsafe !!!
. Please assemble on a clean soft surface to avoid damage.

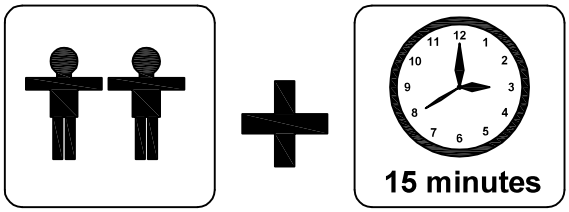

Tools Required



(Included)

www.boltonfurniture.com

Part list - Coffee Table

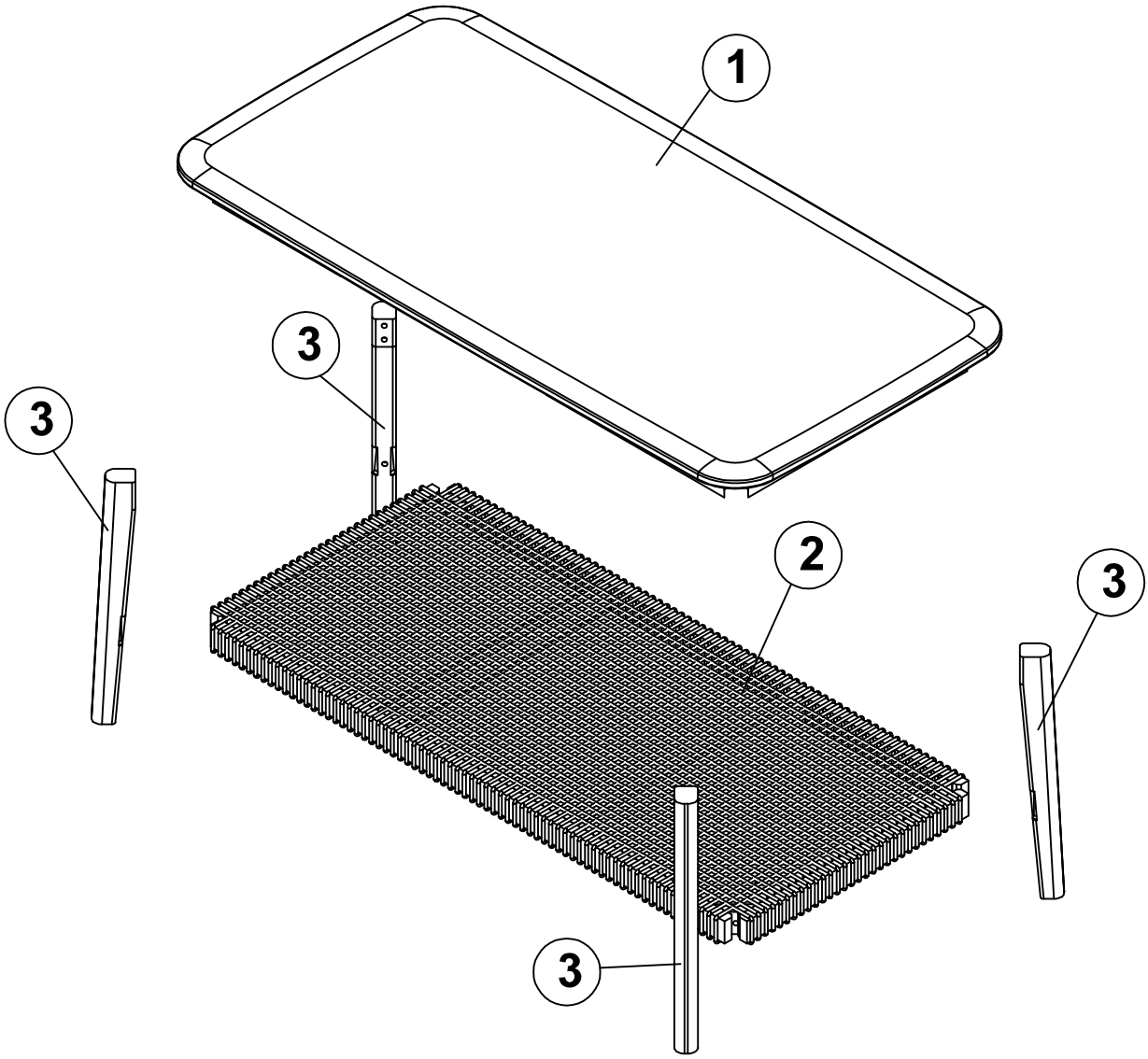

Identifying the hardware-Identify the hardware using the illustrations below

A	M6*50mm Bolt	12
B	M6 Washer	12
C	Spring Washer	12
D	Allen Key	01

Step 01

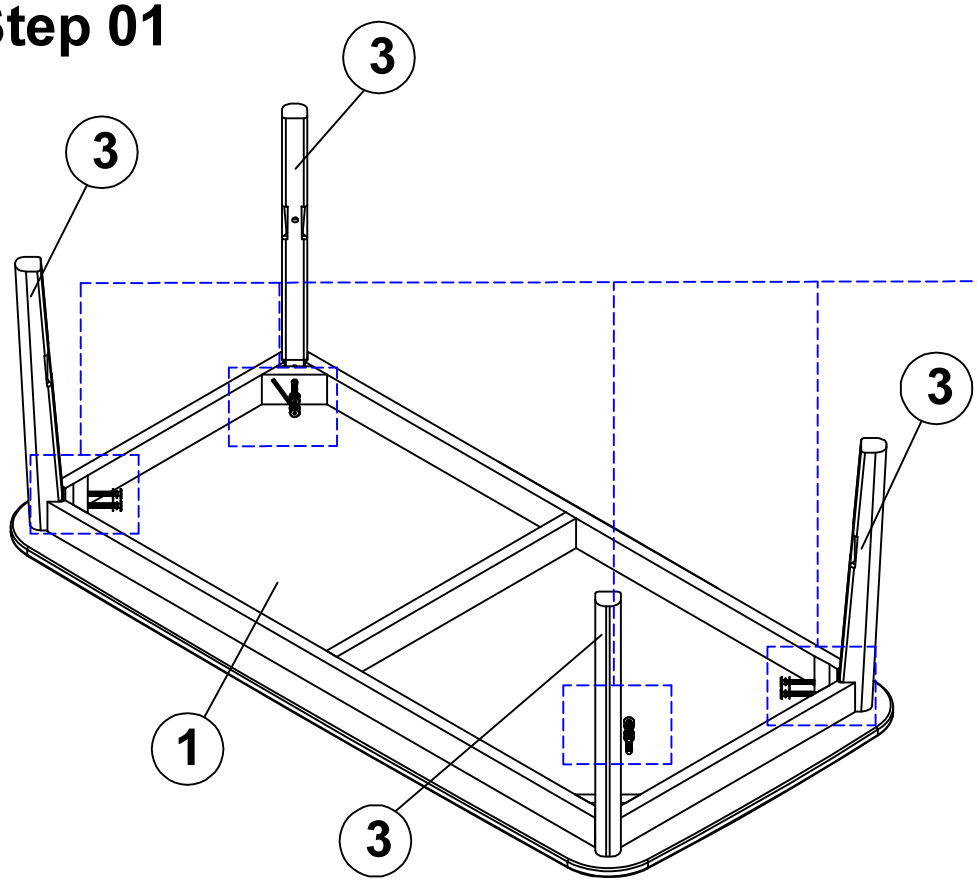

A	M6*50mm Bolt	08
B	M6 Washer	08
C	Spring Washer	08
D	Allen Key	01

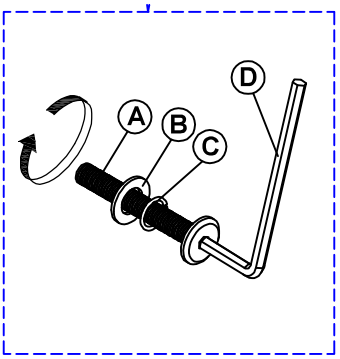

Note: Don't tighten bolts until completely assembly!

Step 02

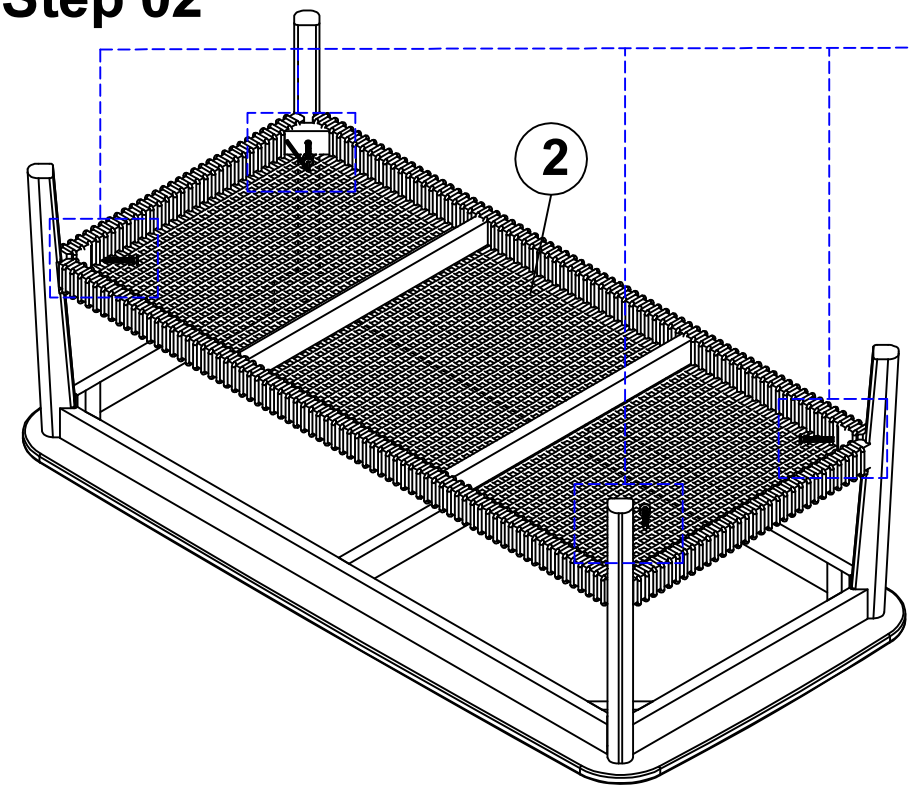

A	M6*50mm Bolt	04
B	M6 Washer	04
C	Spring Washer	04
D	Allen Key	01

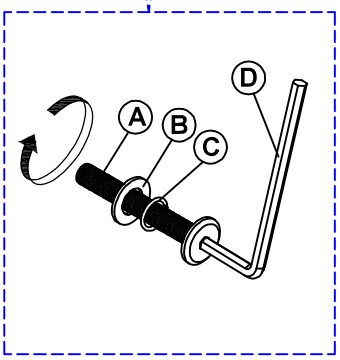

Note: Tighten bolts firmly at this time

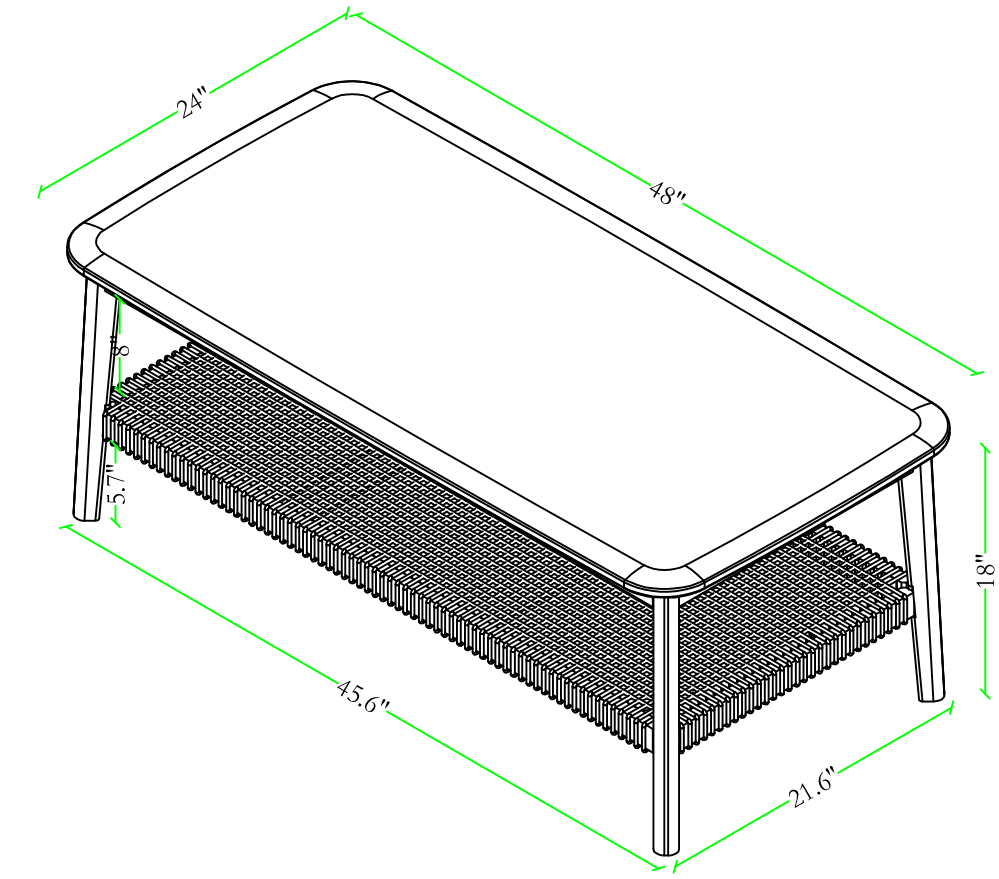

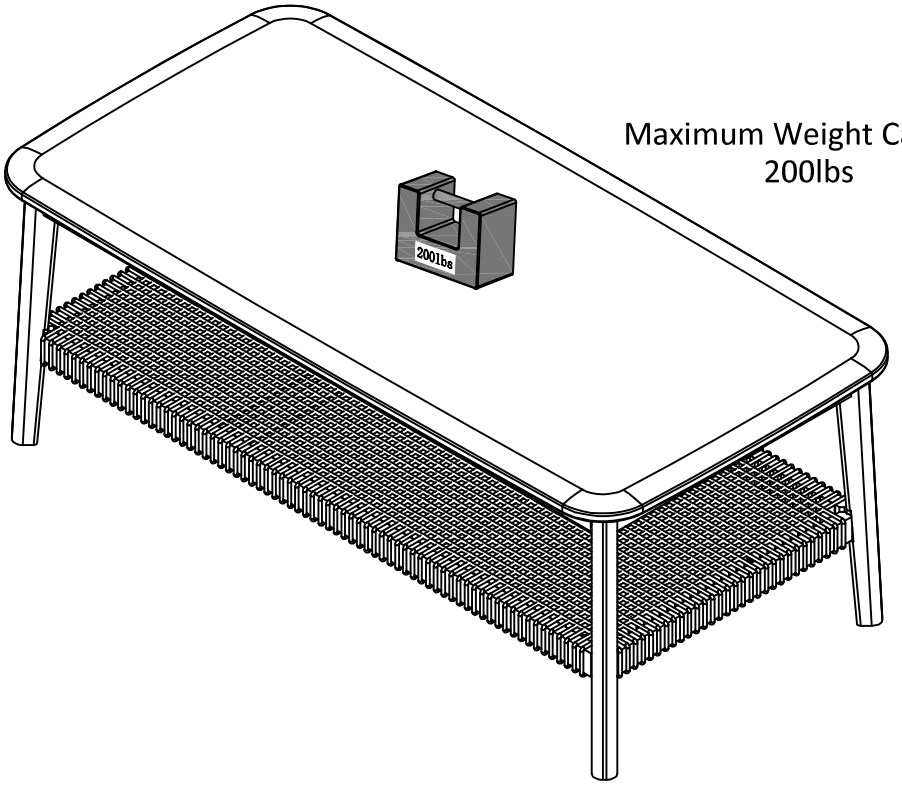

Maximum Weight Capacity:
200lbs