KINGSTON

TO ORDER PARTS, CALL: 1-877-252-7277
www.kingstonbrass.com

VTSQ663422

66" Acrylic Freestanding Tub with Drain

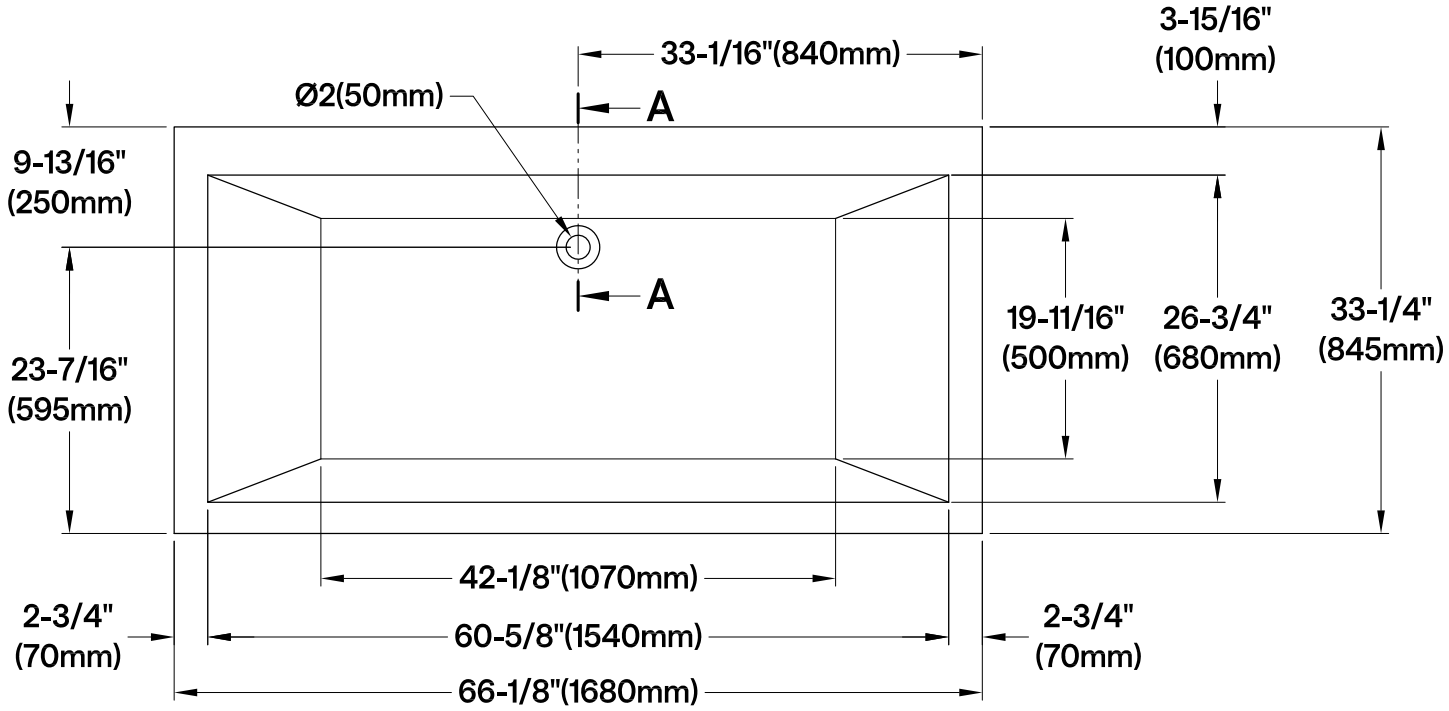

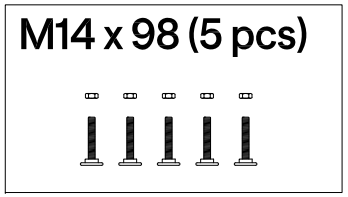

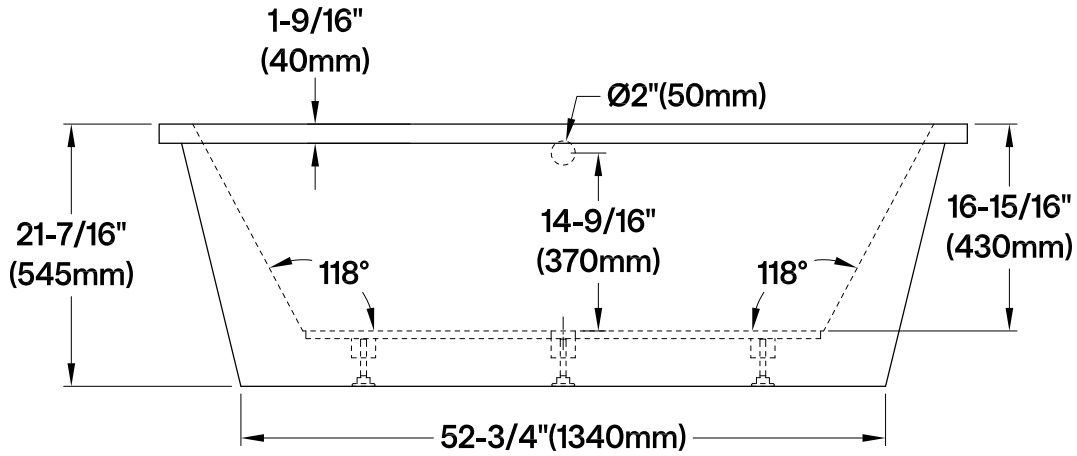

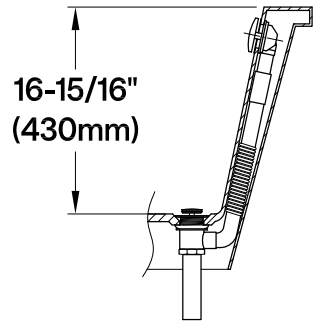

Section A-A

2026-03-A