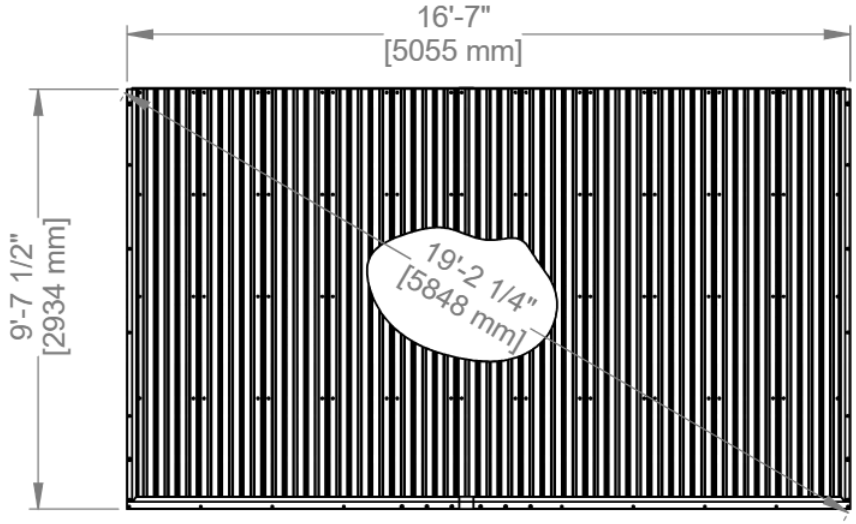

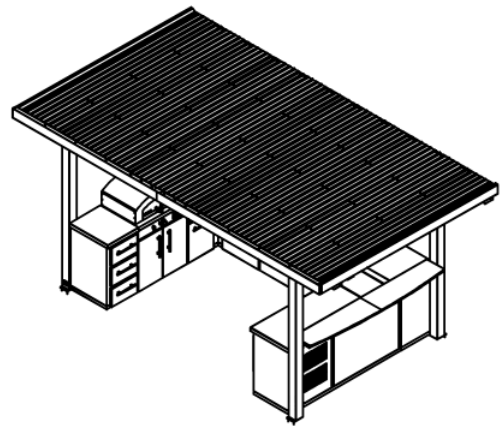

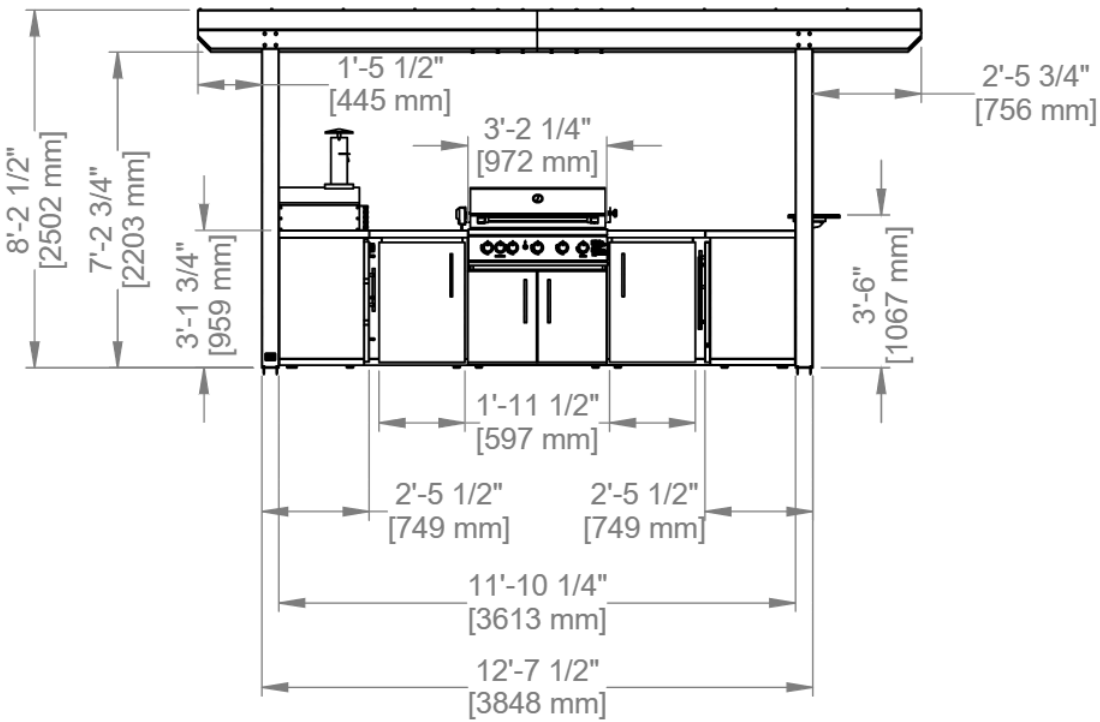

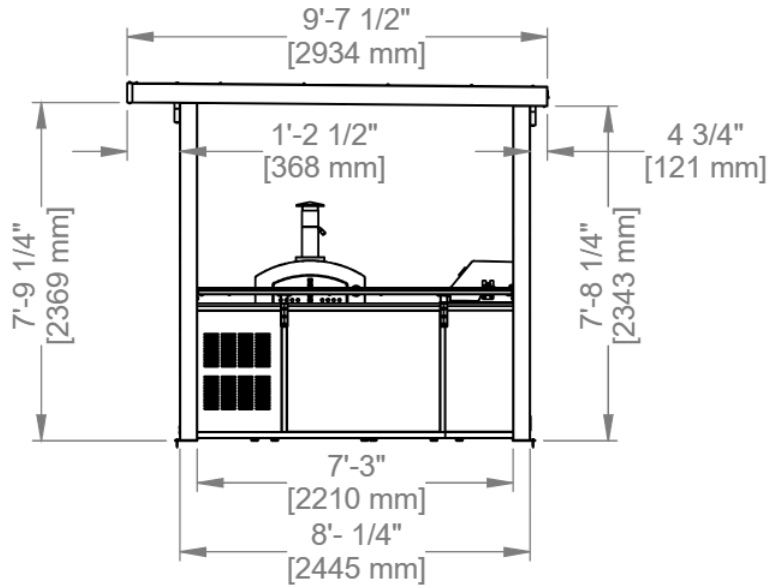

RANGE
OUTDOOR LIVING

EDGEMONT BAY

FOOTPRINT

RANGE OUTDOOR LIVING
rangeoutdoorliving.com

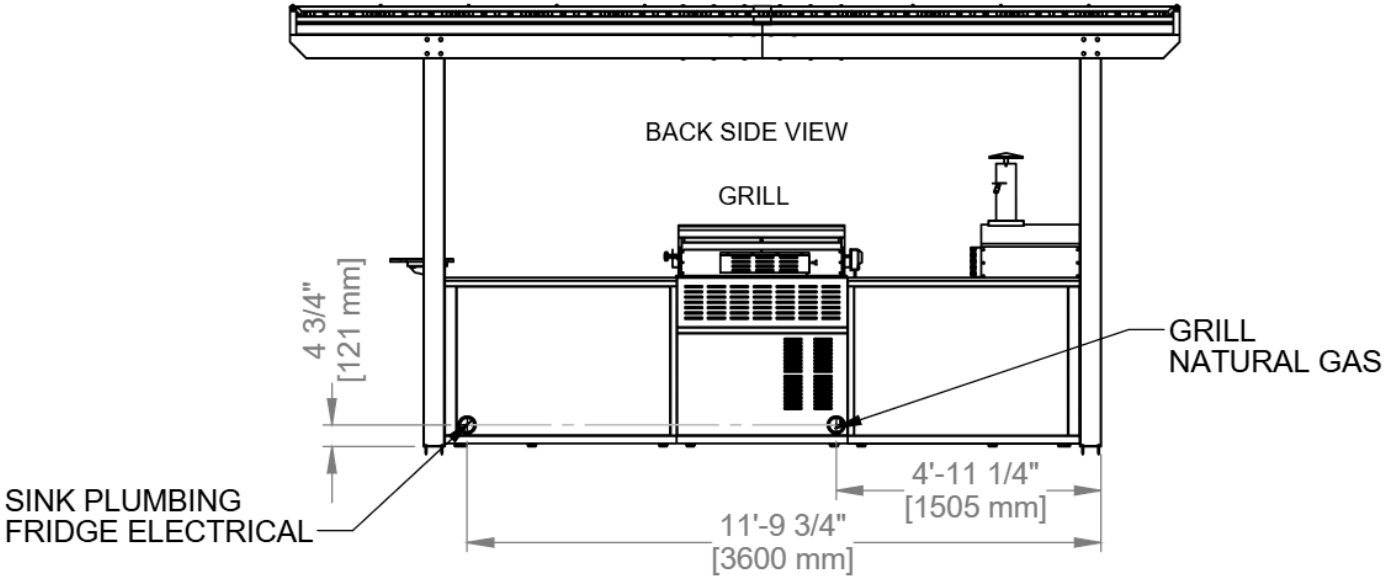
BACK SIDE VIEW
GRILL
4 3/4"
[121 mm]
GRILL
NATURAL GAS
SINK PLUMBING
FRIDGE ELECTRICAL
4'-11 1/4"
[1505 mm]
11'-9 3/4"
[3600 mm]

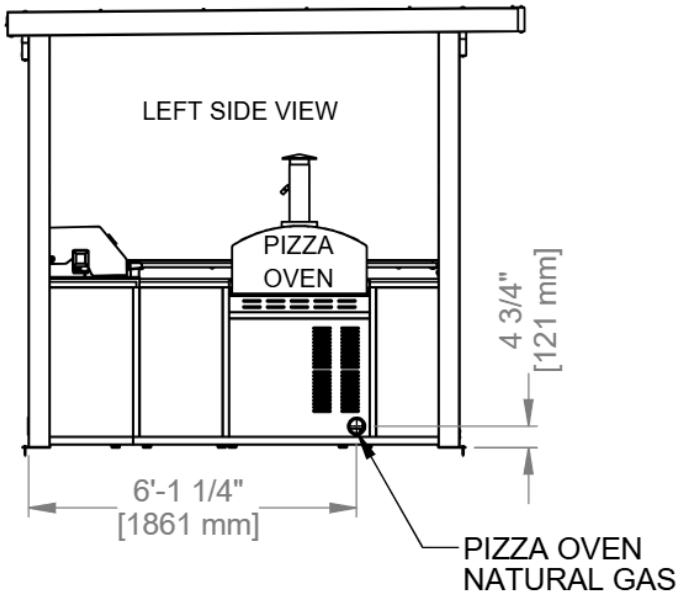
LEFT SIDE VIEW
PIZZA
OVEN
4 3/4"
[121 mm]
6'-1 1/4"
[1861 mm]
PIZZA OVEN
NATURAL GAS

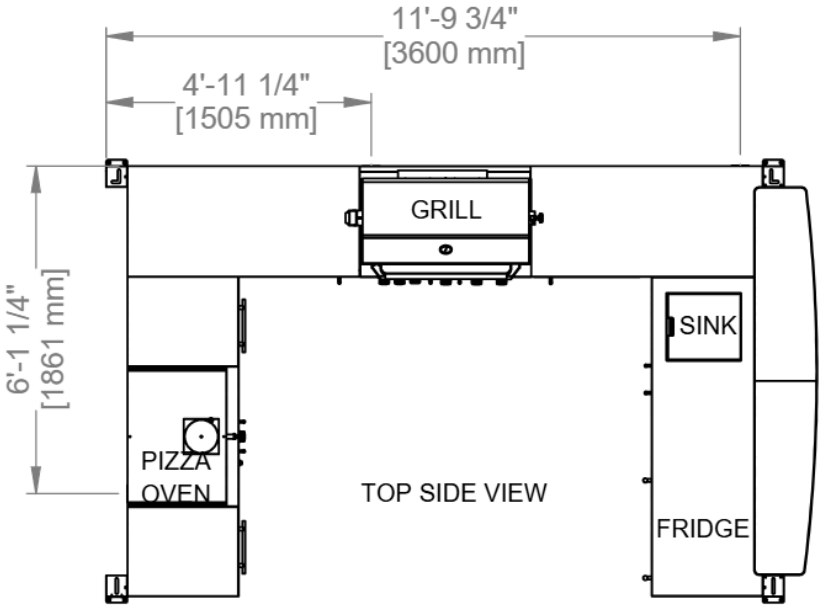
11'-9 3/4"
[3600 mm]
4'-11 1/4"
[1505 mm]
GRILL
6'-1 1/4"
[1861 mm]
SINK
PIZZA
OVEN
TOP SIDE VIEW
FRIDGE