NINA 150CM WALL MOUNTED TV UNIT WITH LED SHELF ASSEMBLY INSTRUCTIONS

Thank you for purchasing the Nina 150cm wall mounted TV unit with LED shelf.
Please read the instructions carefully to ensure safe operation of this product.

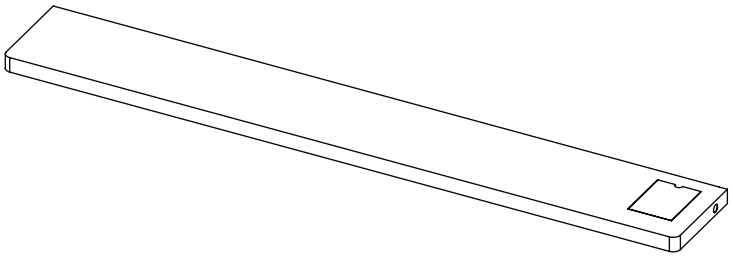

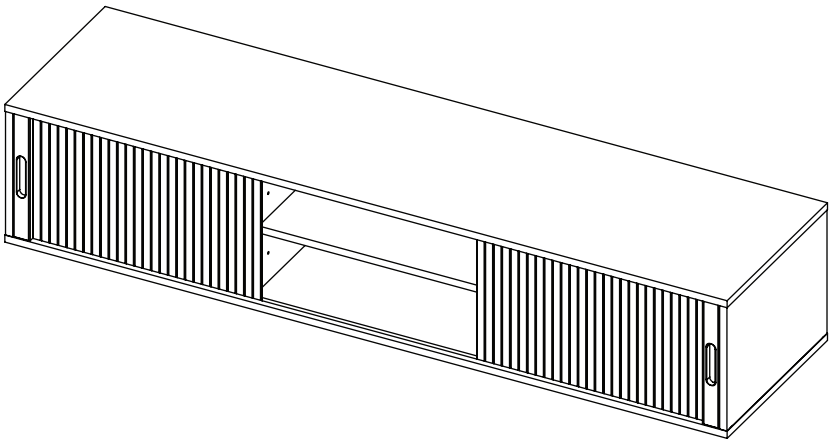

TV Bench Size: 151.4 x 39.6 x 29.5 cm (WDH)
Floating Shelf Size: 140 x 20 x 3.8 cm (WDH)
Colour: Grey

PLEASE READ this sheet prior to assembly to familiarise yourself with the various stages of construction.

Carefully open the pack supplied and check the contents against the parts and fittings check list. Do not destroy any of the packaging until you are certain that you have all the necessary parts for the assembly.

CAUTION: There are small components used in the construction of this unit. These loose items should be kept away from young children whilst assembling your unit to avoid the danger of choking.

Tools Required

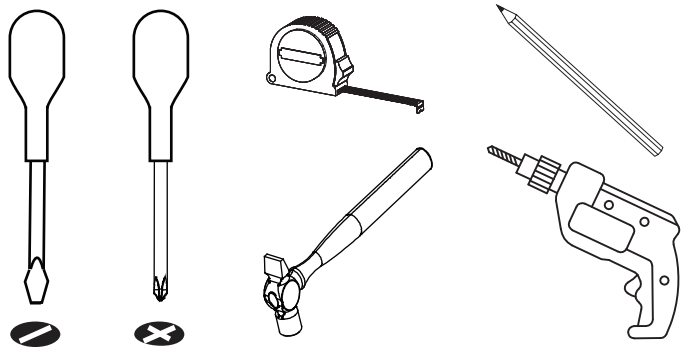

Not Supplied

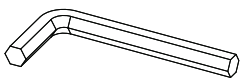

This Allen key (P) is included. Please keep it safe in case it is required, in the future, to remove the LED Decor Rail, part (7)



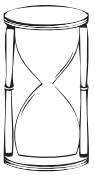

1 Hour Set Up

IMPORTANT - READ CAREFULLY - RETAIN THESE INSTRUCTIONS FOR FUTURE REFERENCE.

INFORMATION

- This product is designed to hold 50 Kg in total, spread evenly over the whole unit.
- Do not exceed this weight.
- We recommend that this unit is assembled in the room intended for use.
- When you are ready to start, make sure that you have the right tools, plenty of space and a clean, dry area for assembly.
- Unwrap all packaging materials and place the components on top of the carton box or on a clean floor to prevent them from scratching.
- Check the pack and make sure you have all the parts listed.
- Ensure that this product is fully assembled as illustrated before use.
- Check all screws or bolts are tightened and inspect regularly
- Tools not included unless specified in the parts list.

WARNINGS

- DO NOT use power tools to construct this product.
- DO NOT tighten screws until parts are assembled or as advised in this guide.
- DO NOT over tighten screws or bolts.
- DO NOT use this product if parts are missing, damaged or worn.
- This is a TV Unit designed to hang from the wall, only use the supports provided.
- **INSTALLATION WARNINGS:**

1. In order to prevent the product falling down this product must be installed with the wall hanging supports provided - do not use any other means to support the product.
2. Carefully assess the suitability of the wall to ensure that the fastening device will withstand the load and forces generated. Walls can be quite different in construction so fixings are not supplied - choose the most suitable fixing for your wall type - if in doubt consult an expert.
3. When drilling the wall always be sure the area to be drilled is free from hidden electrical wiring, water or gas pipes.
4. The assembly of this product must be done carefully following the detailed stages in the Assembly Instruction.
5. Installation of this product needs to be carried out in accordance with the following instructions, particularly study Steps 10 to 14 carefully...

CARE INFORMATION

- To clean, wipe with a damp clean cloth.
- Never use scourers, abrasives or chemical cleaners.
- Do not use solvent based cleaners or detergents as they can bleach or damage the product.

Parts and Fittings Checklist

Please check the pack contents before assembling the product. If any components are missing, please contact your retailer. The fittings pack contains small items that should be kept away from small children.

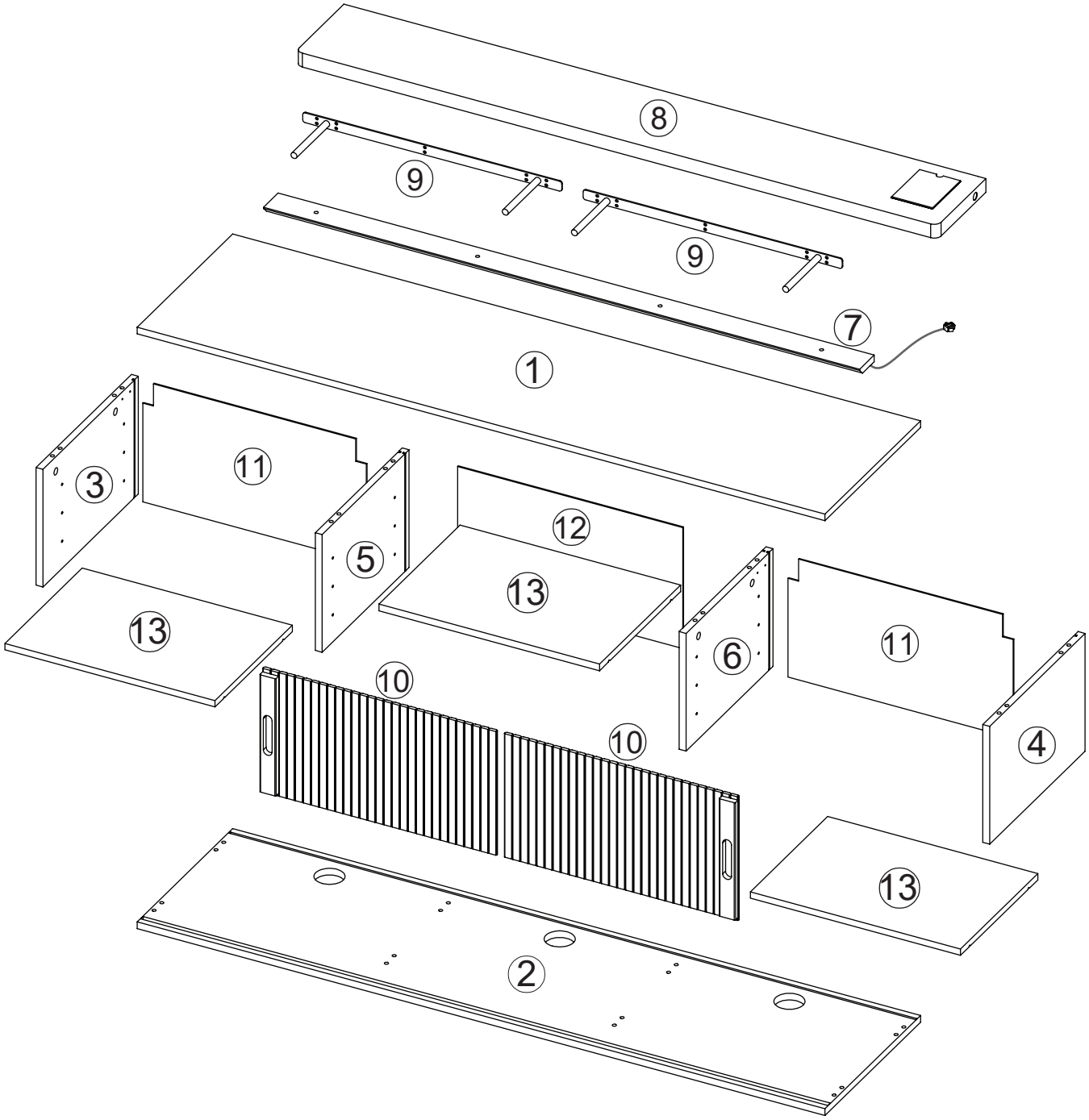

The parts for TV unit & shelf are packed in one carton

1	2	3
Description: Top Panel Qty: 1 Size: 1514 x 396 x 15 mm Carton No: 1/1	Description: Base Panel Qty: 1 Size: 1514 x 396 x 15 mm Carton No: 1/1	Description: LH Side Panel Qty: 1 Size: 395 x 265 x 15 mm Carton No: 1/1
4	5	6
Description: RH Side Panel Qty: 1 Size: 395 x 265 x 15 mm Carton No: 1/1	Description: LH Upright Qty: 1 Size: 372 x 265 x 15 mm Carton No: 1/1	Description: RH Upright Qty: 1 Size: 372 x 265 x 15 mm Carton No: 1/1
10	11	12
Description: Sliding Door Qty: 2 Size: 496 x 274 x 15 mm Carton No: 1/1	Description: End Back Panel Qty: 2 Size: 493 x 274 x 3 mm Carton No: 1/1	Description: Middle Back Panel Qty: 1 Size: 493 x 274 x 3 mm Carton No: 1/1
13		
Description: Removable Shelf Qty: 3 Size: 483 x 354 x 15 mm Carton No: 1/1		

The parts for shelf

7	8	9
Description: LED Decor Rail Qty: 1 Size: 1300 x 60 x 15 mm Carton No: 1/1	Description: Floating LED Shelf Qty: 1 Size: 1400 x 200 x 38 mm Carton No: 1/1	Description: Metal Shelf Bracket Qty: 1 Size: 400 x 100 x 28 mm Carton No: 1/1

General Hints & Tips

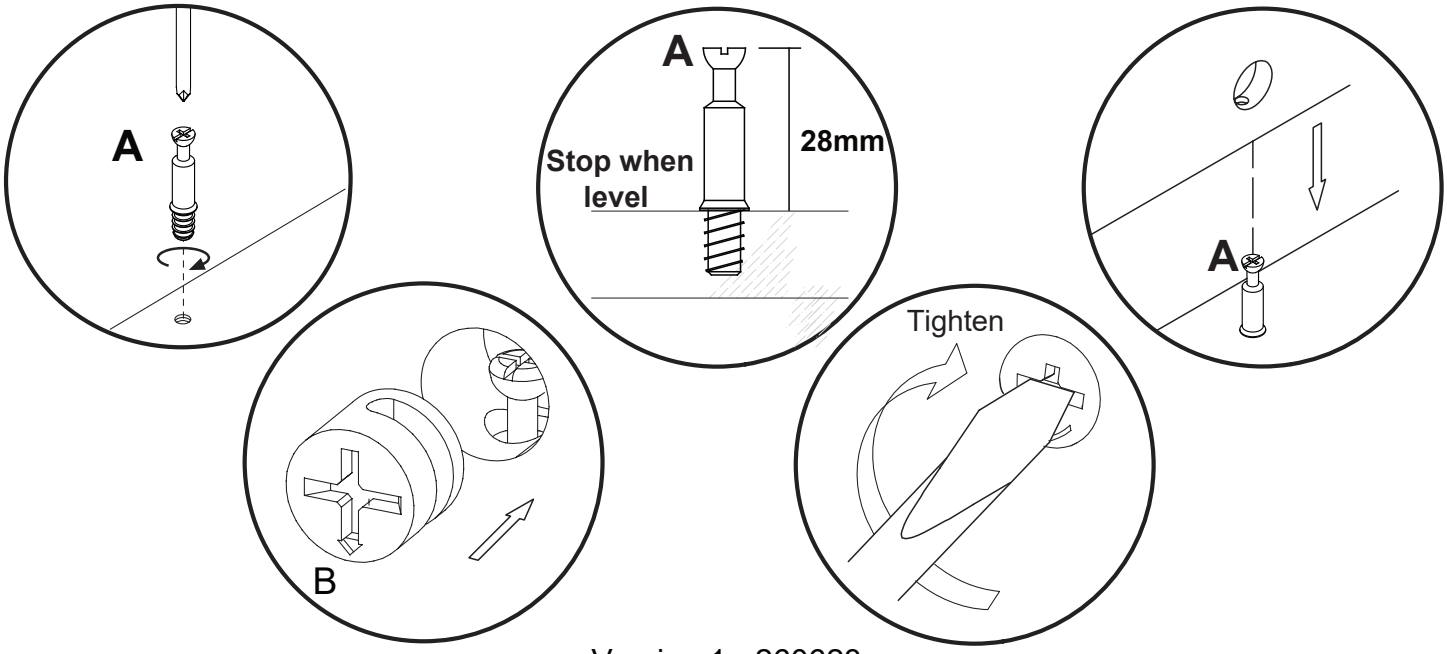

Fittings For TV Unit (to scale)

Code	Item	Quantity
A	Cam Bolt (38mm overall)	8
B	Cam Lock	8
C	Dowel (Ø6x30mm)	16
D	Screw (Ø3.5x14mm)	8
E	Carcass Screw (Ø7x50mm)	8
G	Screw for Wall Hanging Support (4x32mm)	8

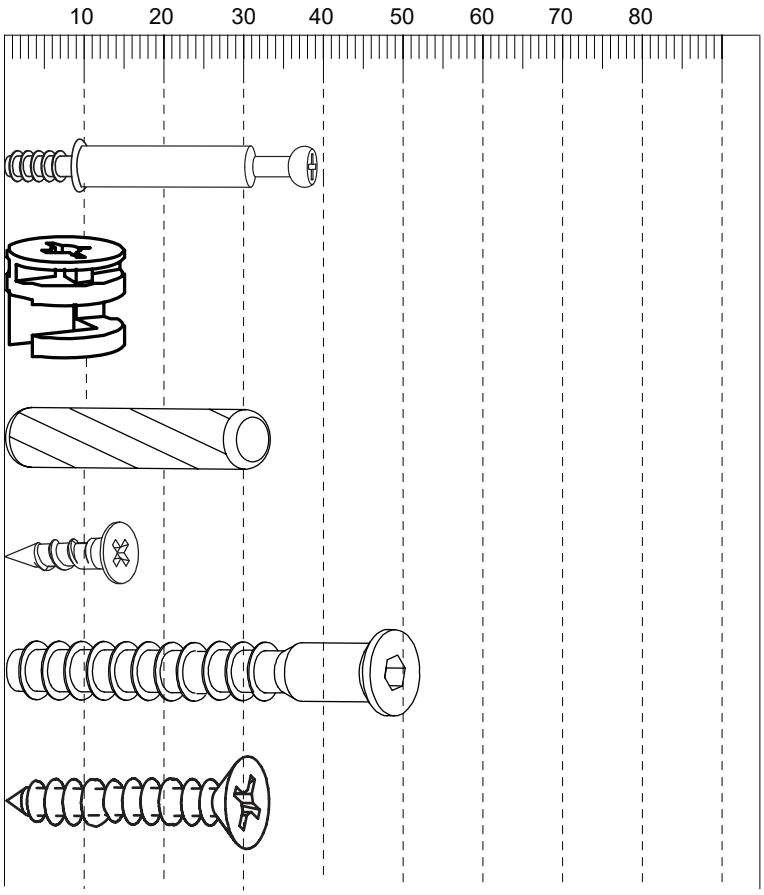

Fittings For TV Unit (not to scale)

Code	Item	Quantity
H	Locking Wedge for Back Panel	8
J	Cam Lock Cover	8
K	Cable Port	3
P	Allen Key for M6 Bolt	1
Q	Wall Hanging Support (Fixed to Cabinet)	4
R	Wall Hanging Bracket (Fixed to Wall)	4
M	Shelf Support	12

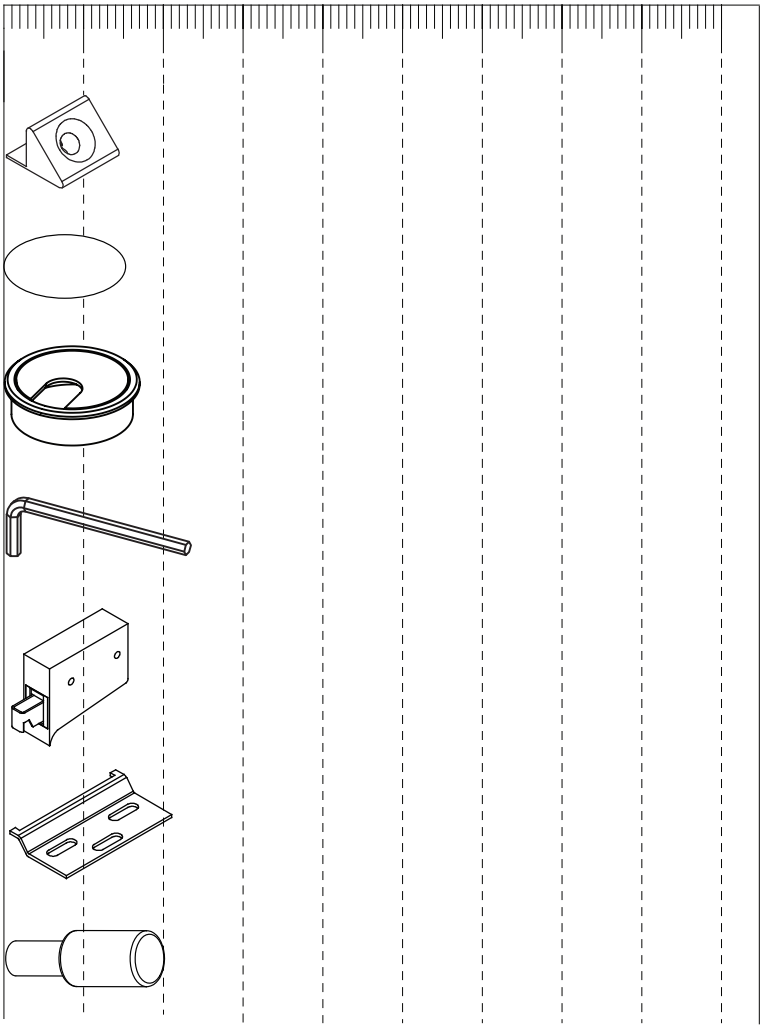

Fittings For Shelf (not to scale)

Code	Item	Quantity
F	Bolt (M6x20mm)	4
N	Screw for Shelf (Ø3.5x20mm)	4
L	Battery Box	1

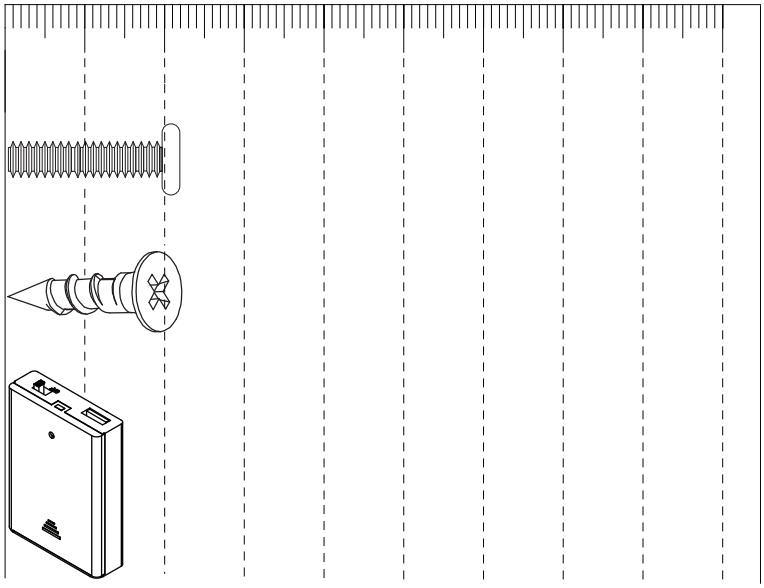

STEP 1

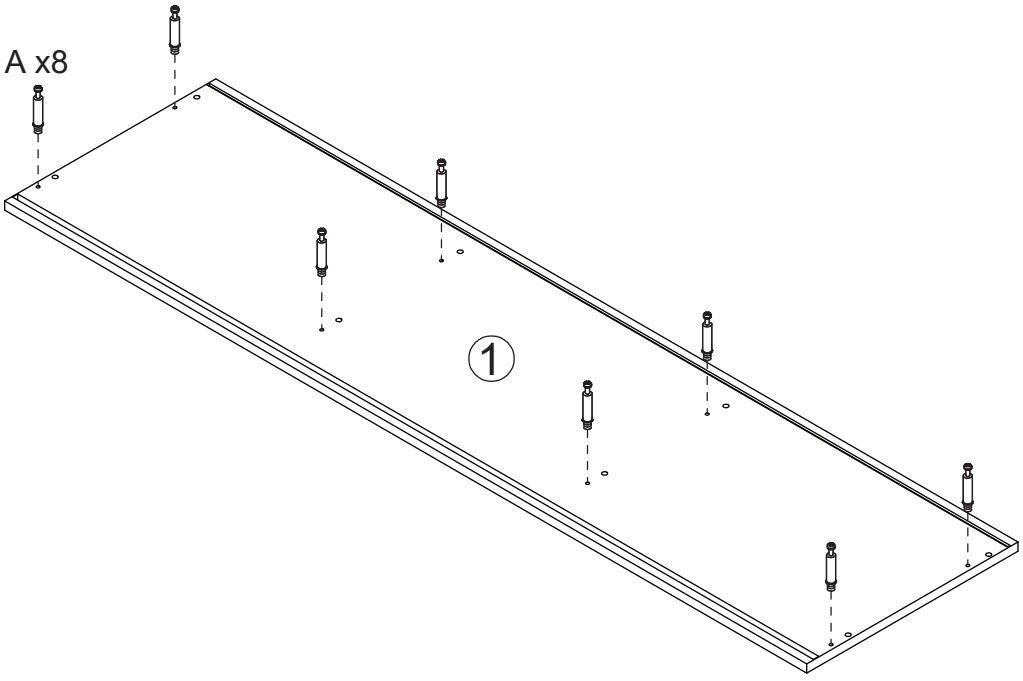

For this step:

Tools required

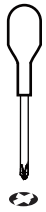

Fittings required

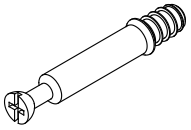

A x8

STEP 2

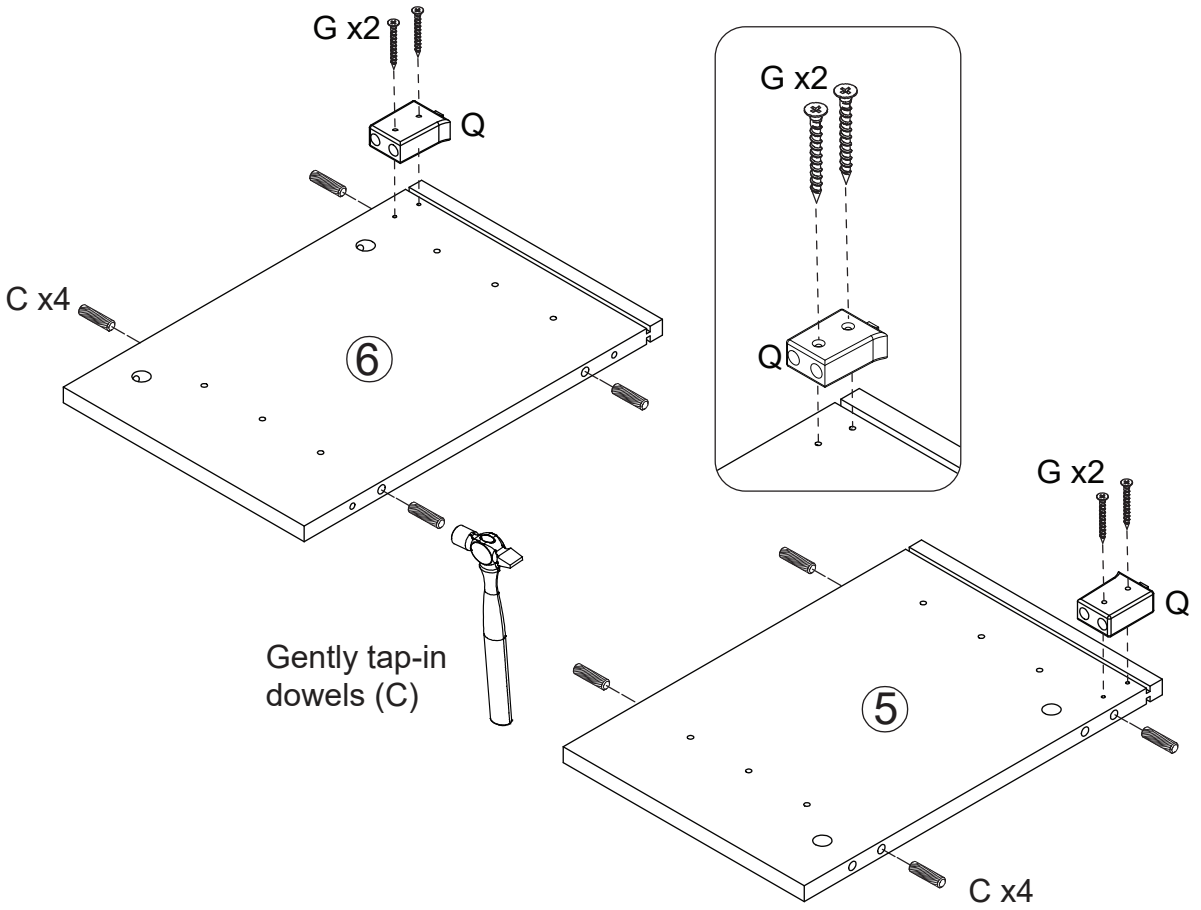

For this step:

Tools required

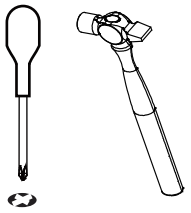

Fittings required


C x8

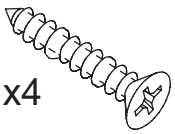
G x4

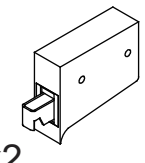
Q x2

STEP 3

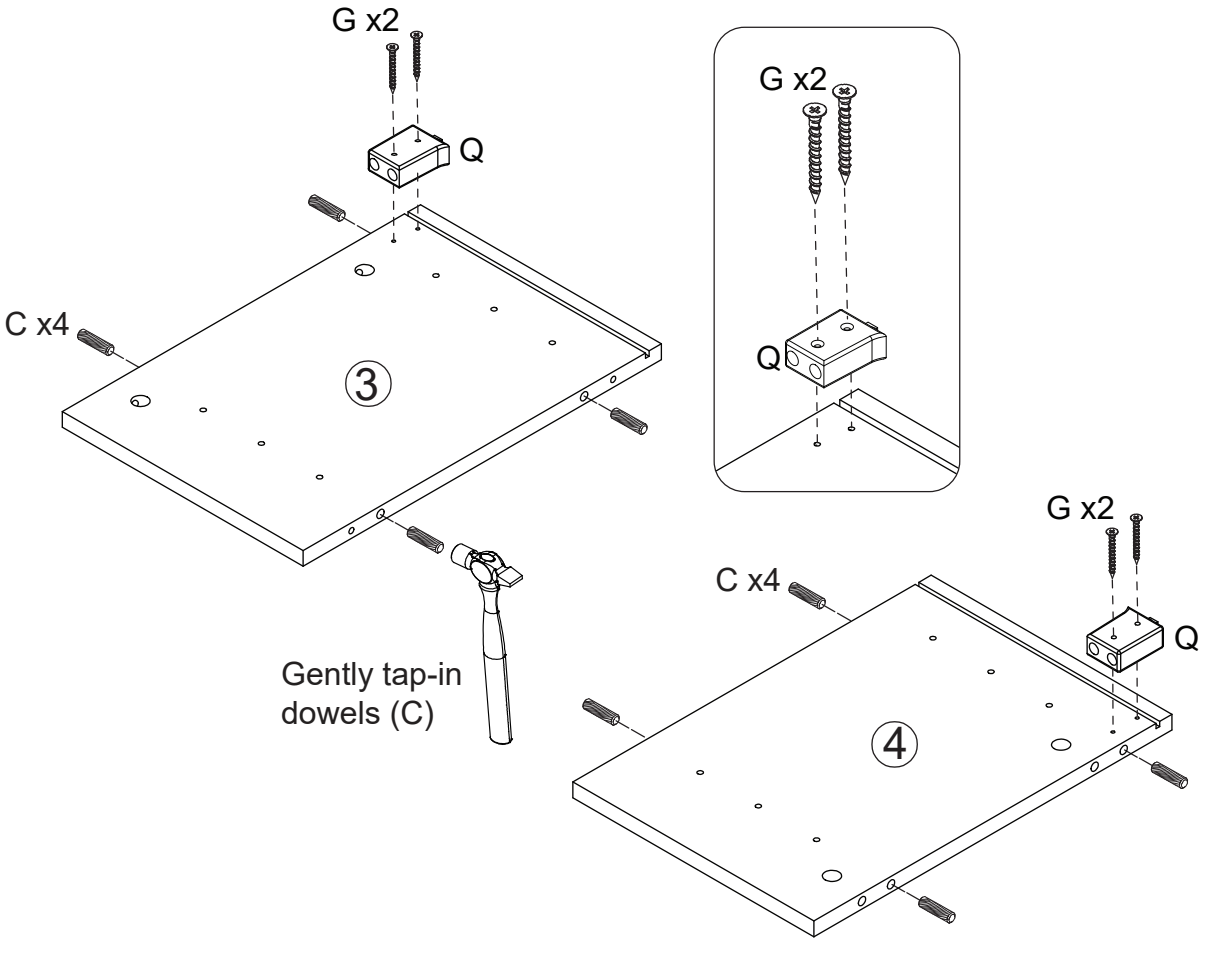

For this step:

Tools required

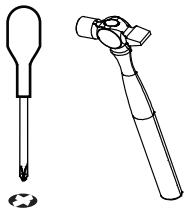

Fittings required


C x8

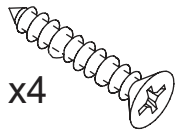
G x4

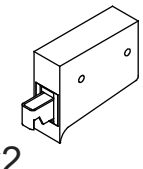
Q x2

STEP 4

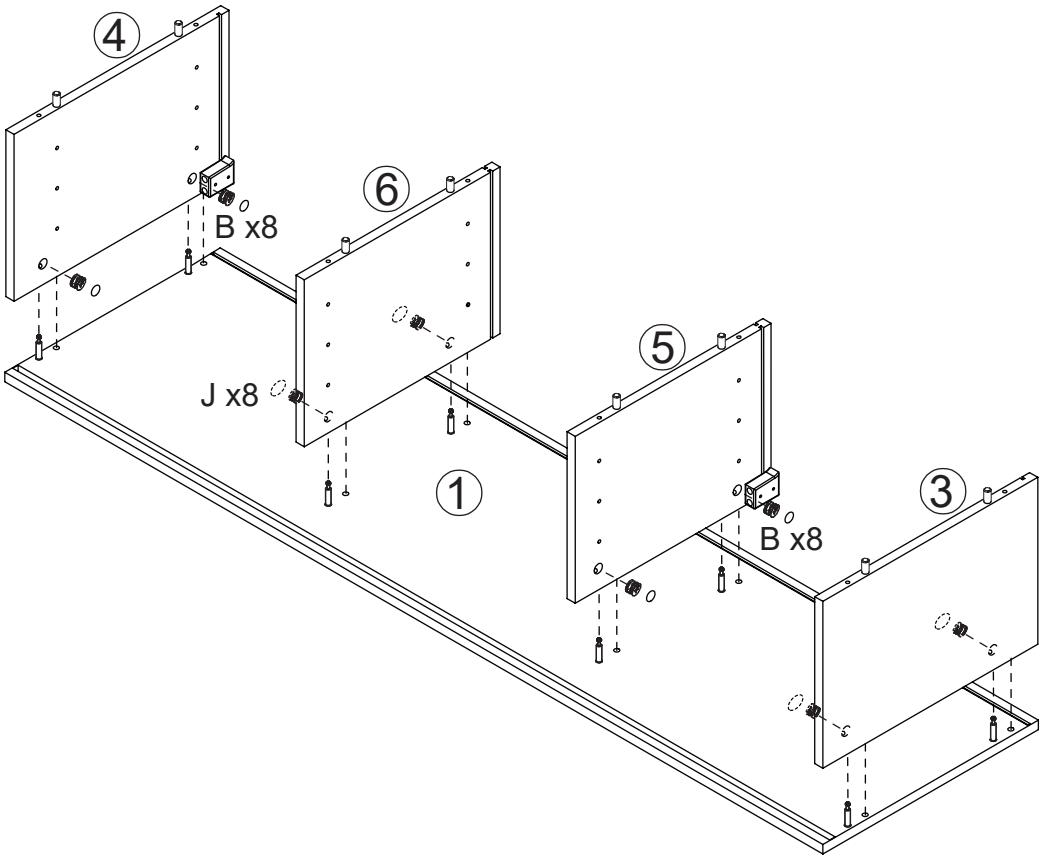

For this step:

Tools required



Fittings required

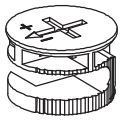

B x8

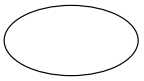

J x8

STEP 5

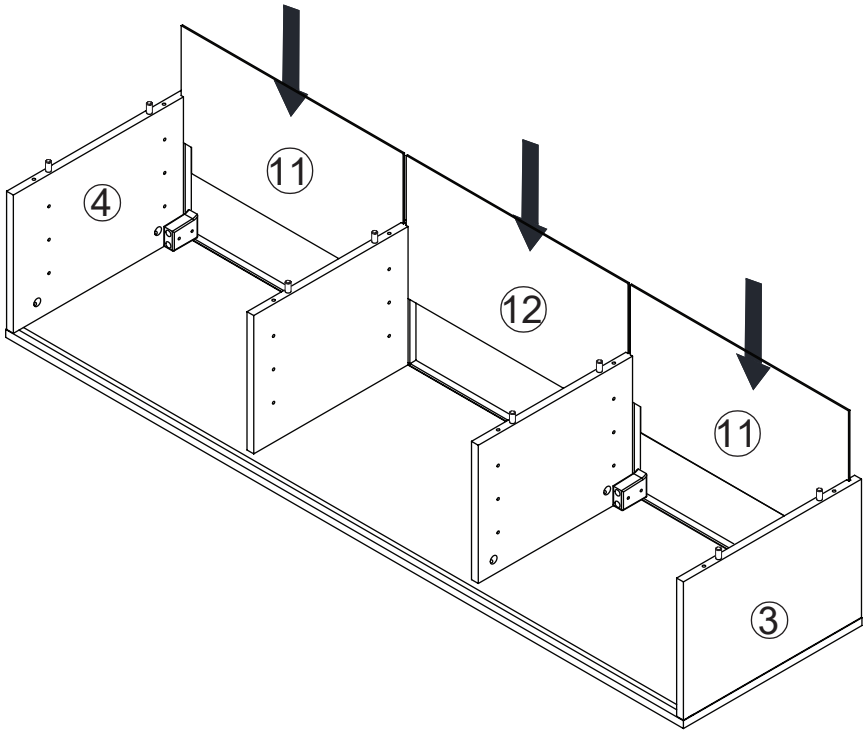

For this step:

Tools required

Fittings required

STEP 6

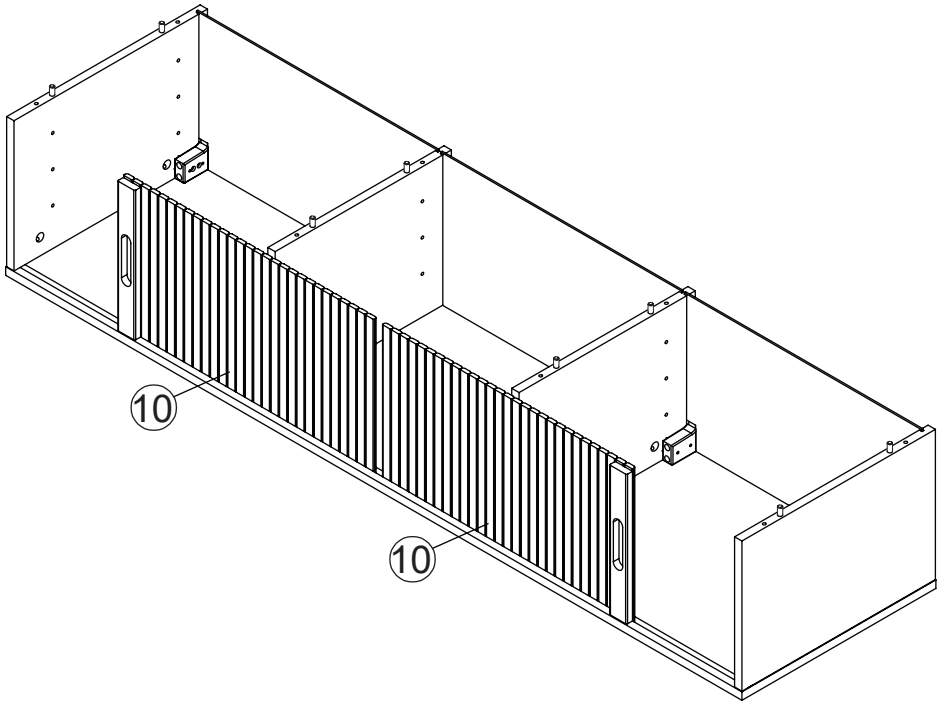

For this step:

Tools required

Fittings required

STEP 7

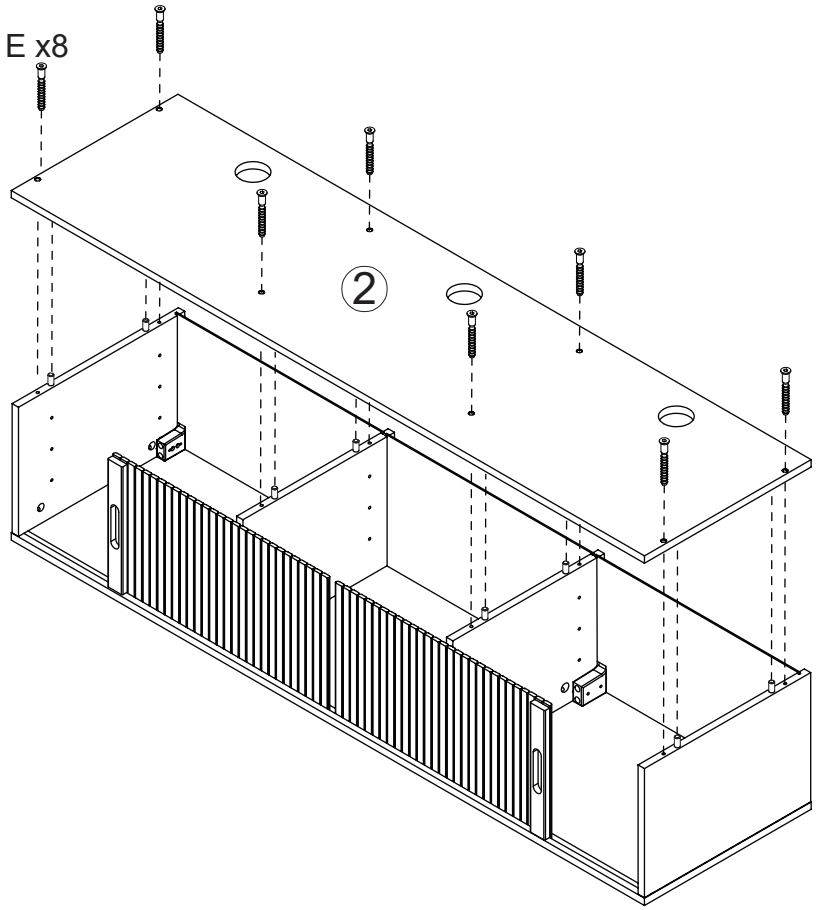

For this step:

Tools required



P

Fittings required

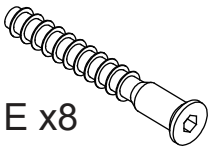

E x8

STEP 8

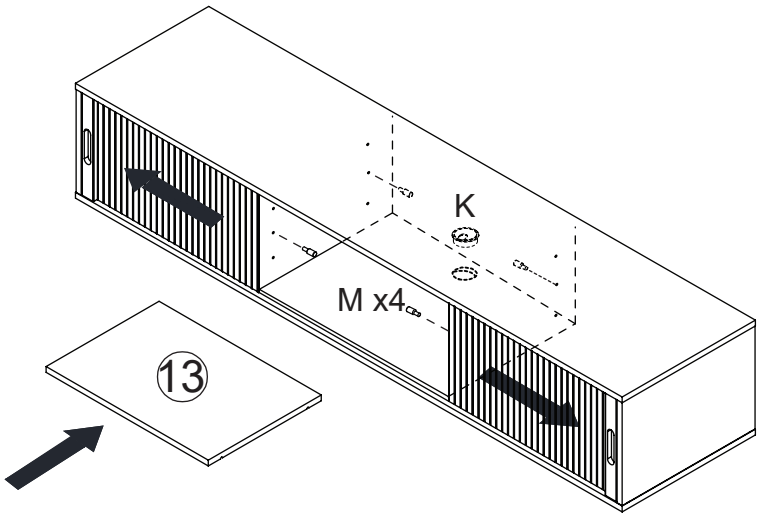

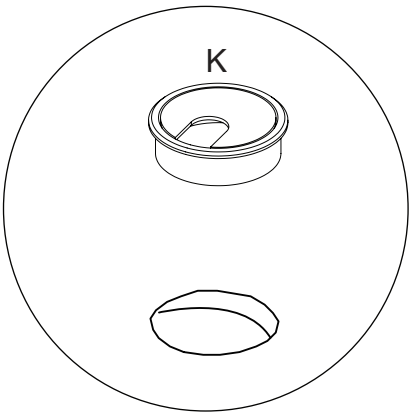

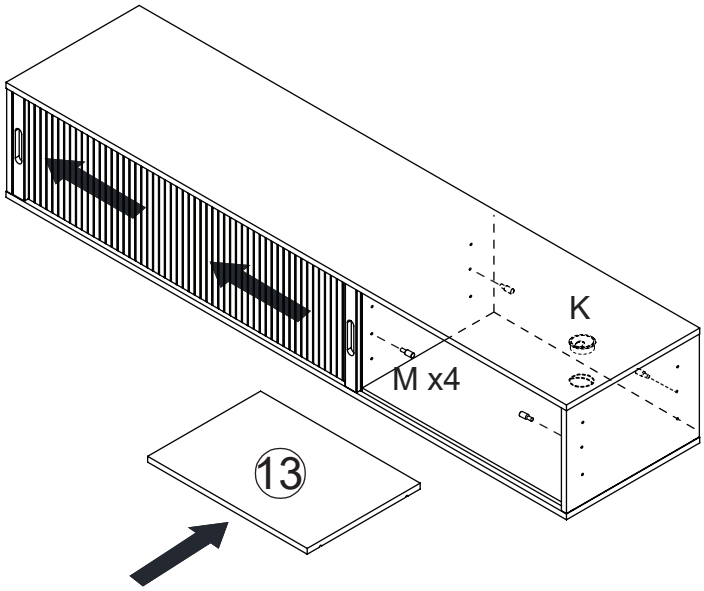

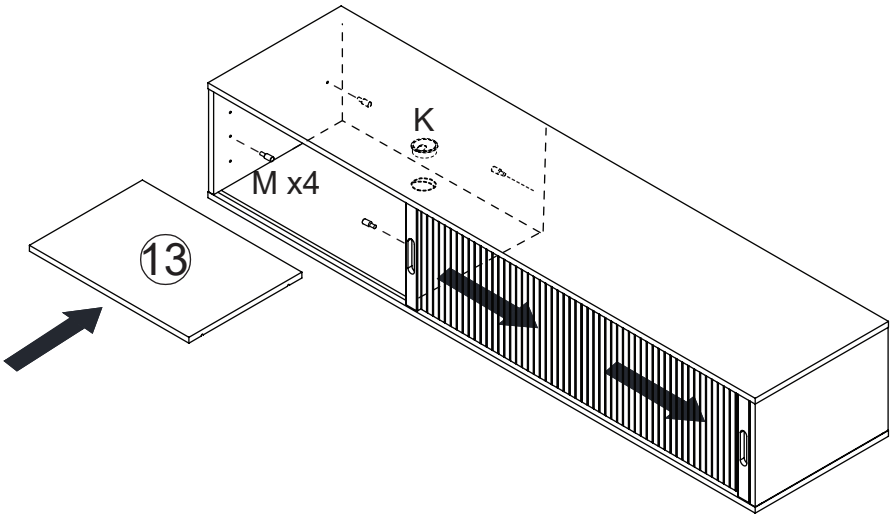

For this step:

Tools required

Fittings required

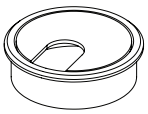

K x3

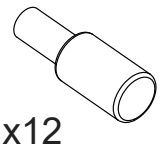

M x12

STEP 9

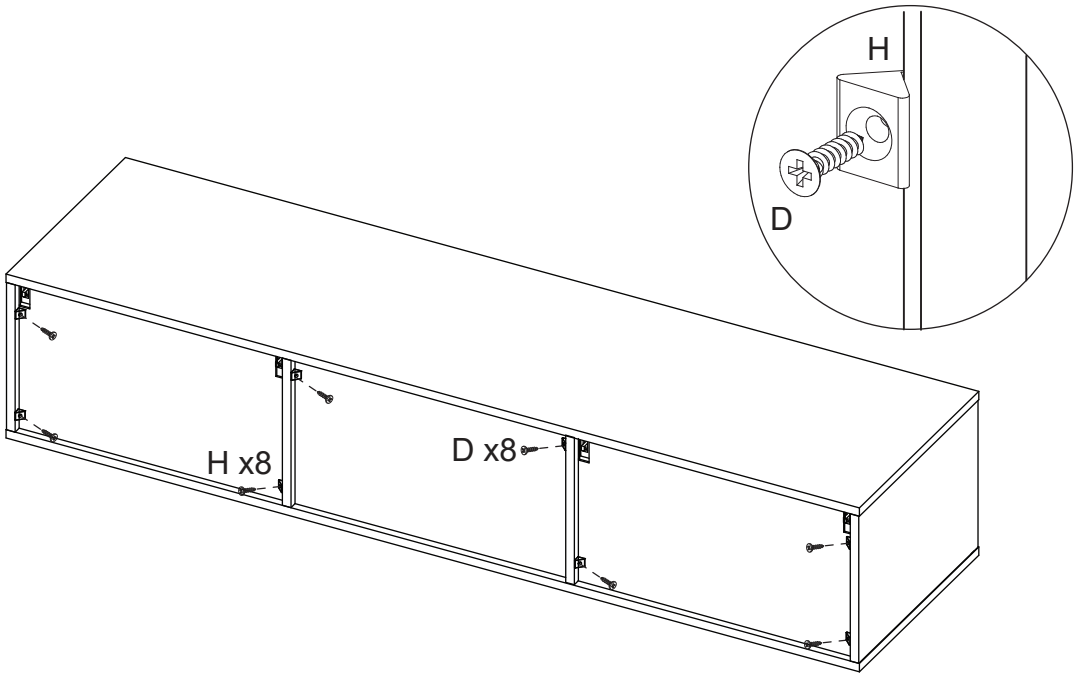

For this step:

Tools required

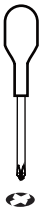

Fittings required

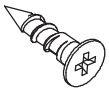

D x8

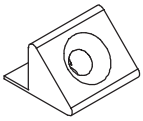

H x8

STEP 10

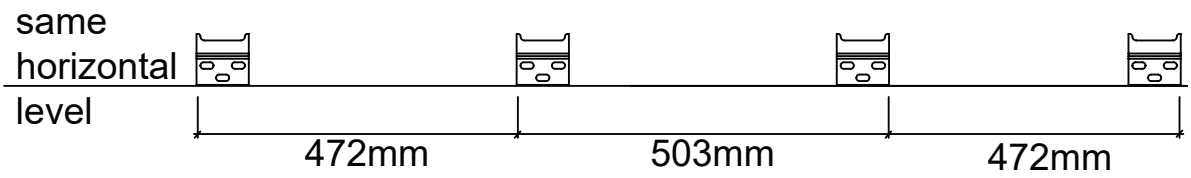

Warning: Always ensure the area to be drilled is free from hidden electrical wires, water or gas pipes.

I Decide on the height you want the cabinet to be then holding one bracket level, mark dead-centre of the three holes. Following the diagram, position and mark holes in the second bracket.

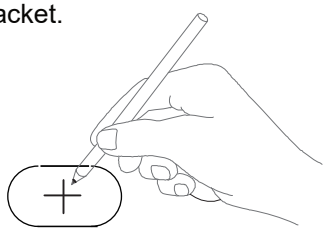

RECOMMENDATION FOR A NORMAL BLOCK WALL

Item	Quantity
Screw (Ø4x35mm)	12
Wall Plug (Ø6x30mm)	12

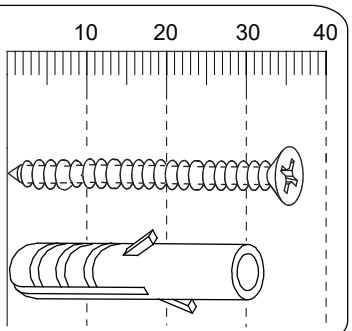

II

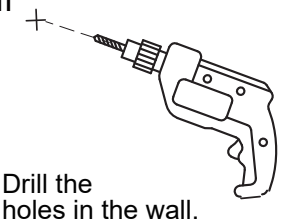

Drill the holes in the wall.

III

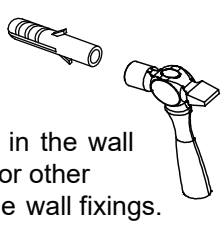

Knock in the wall plugs or other suitable wall fixings.

IV

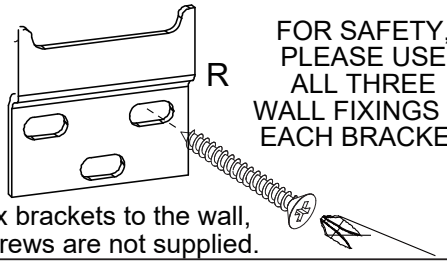

FOR SAFETY, PLEASE USE ALL THREE WALL FIXINGS IN EACH BRACKET

Fix brackets to the wall, screws are not supplied.

For this step:

Tools required



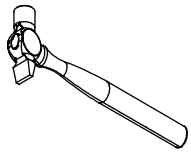

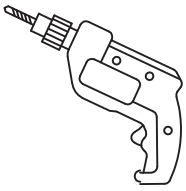

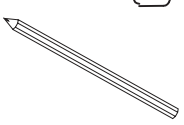

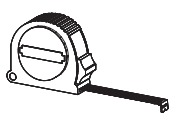

Fittings required

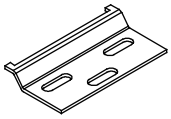

R x4

STEP 11

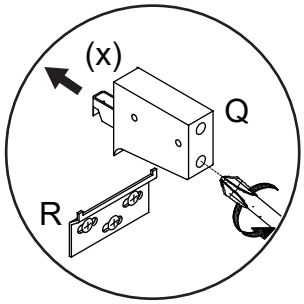

i. On the hanging supports, make certain hooks (x) are fully extended.

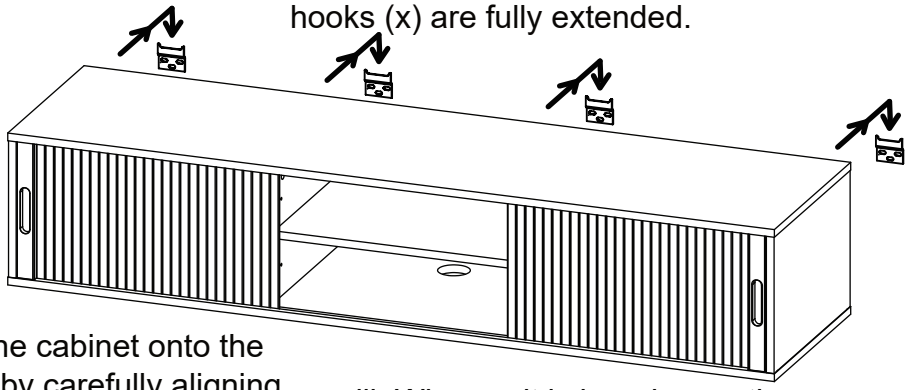

ii. With help, hang the cabinet onto the metal wall brackets by carefully aligning the end panels so they just miss the ends of the brackets. Turn upper screw(s) on either side until unit is horizontal.

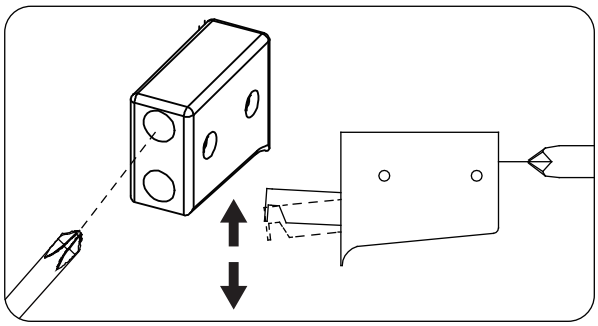

iii. When unit is hanging on the brackets, tighten lower screws clockwise, so clamping unit to wall - do not over-tighten.

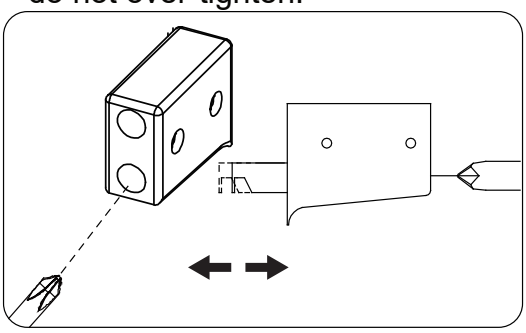

For this step:

Tools required



Fittings required

STEP 12

Floating LED Shelf

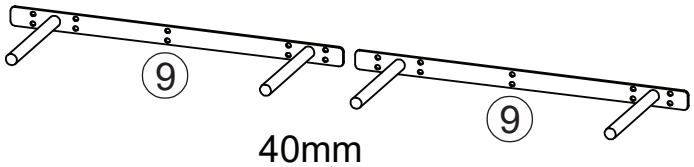

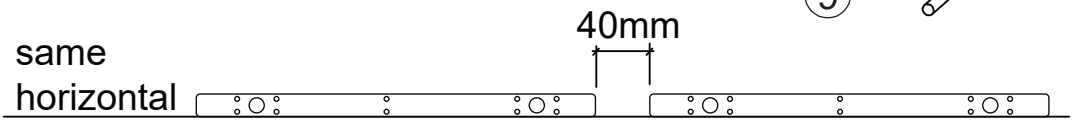

I Decide on the height you want the shelf to be then holding one bracket level, mark dead-centre of the holes. Following the diagram, position and mark holes in the second bracket.

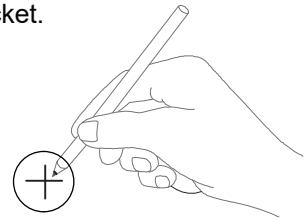

Warning: Always ensure the area to be drilled is free from hidden electrical wires, water or gas pipes.

RECOMMENDATION FOR A NORMAL BLOCK WALL

Item	Quantity
Screw (Ø4x35mm)	20
Wall Plug (Ø6x30mm)	20

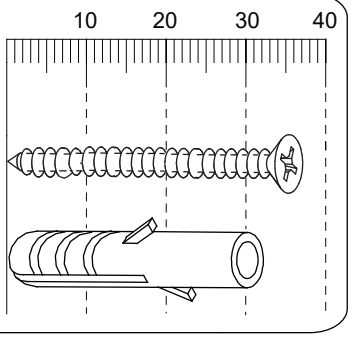

II

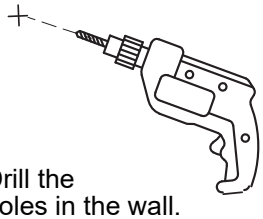

Drill the holes in the wall.

III

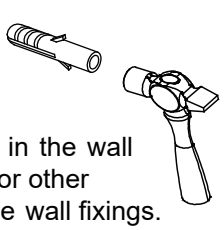

Knock in the wall plugs or other suitable wall fixings.

IV

FOR SAFETY, PLEASE USE ALL HOLES ON EACH BRACKET

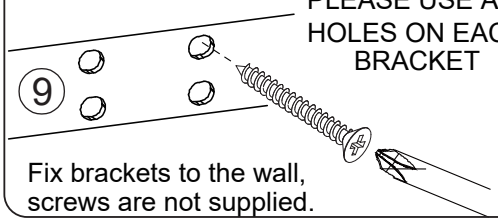

Fix brackets to the wall, screws are not supplied.

For this step:

Tools required

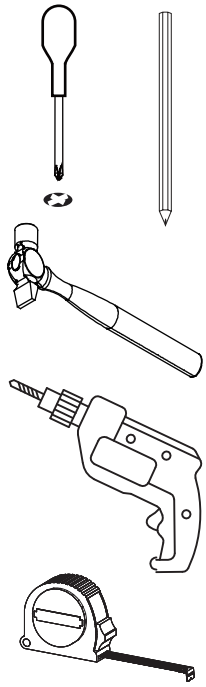

Fittings required

STEP 13

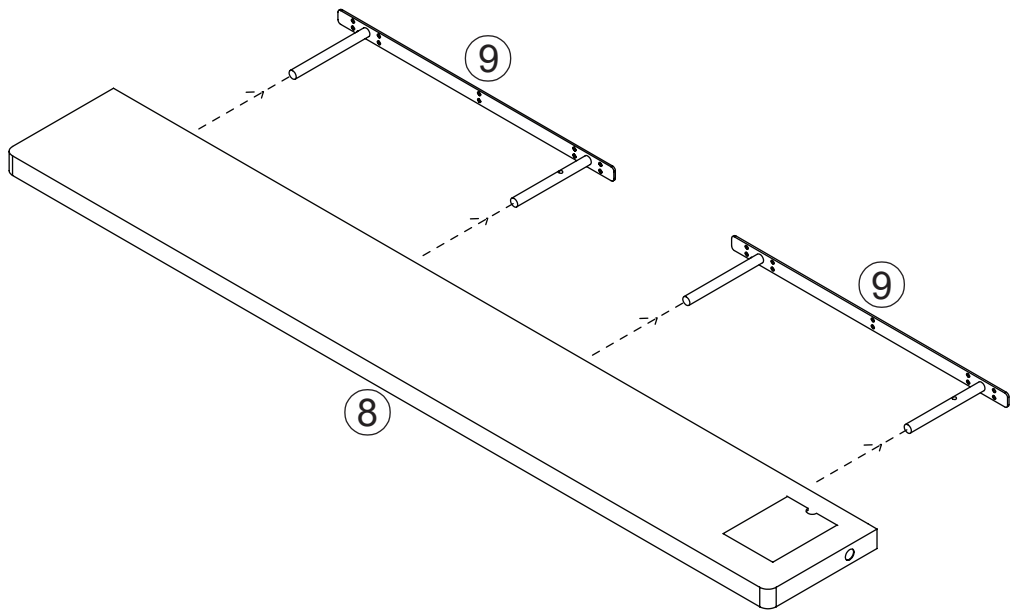

For this step:

Tools required

Fittings required

STEP 14

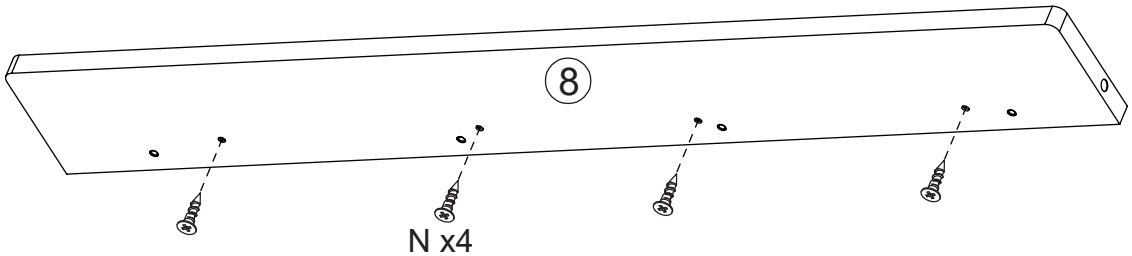

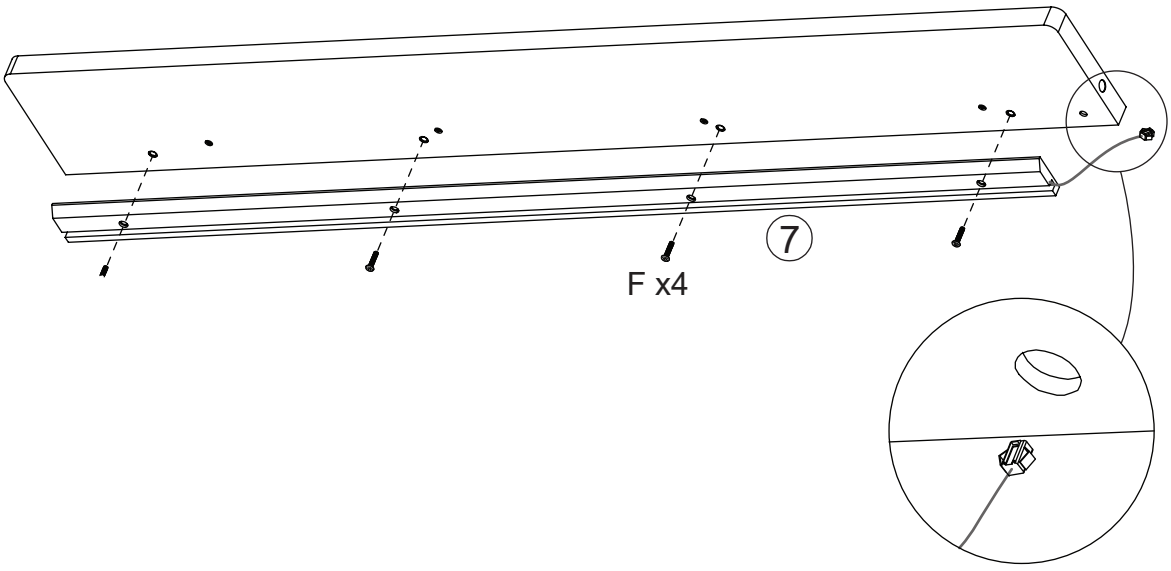

For this step:

Tools required

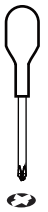



P

Fittings required

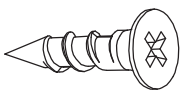

N x4

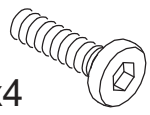

F x4

STEP 15

The touch switch is used to turn the LEDs on or off - tap the switch once.

The intensity of the light can be adjusted lighter or darker - long touch keeping finger on the switch.

The colour of the switch can be changed from blue to white, just double tap it when power is on.

Best results are when using a power bank - battery life is relative to the hours that the lights are turned on.



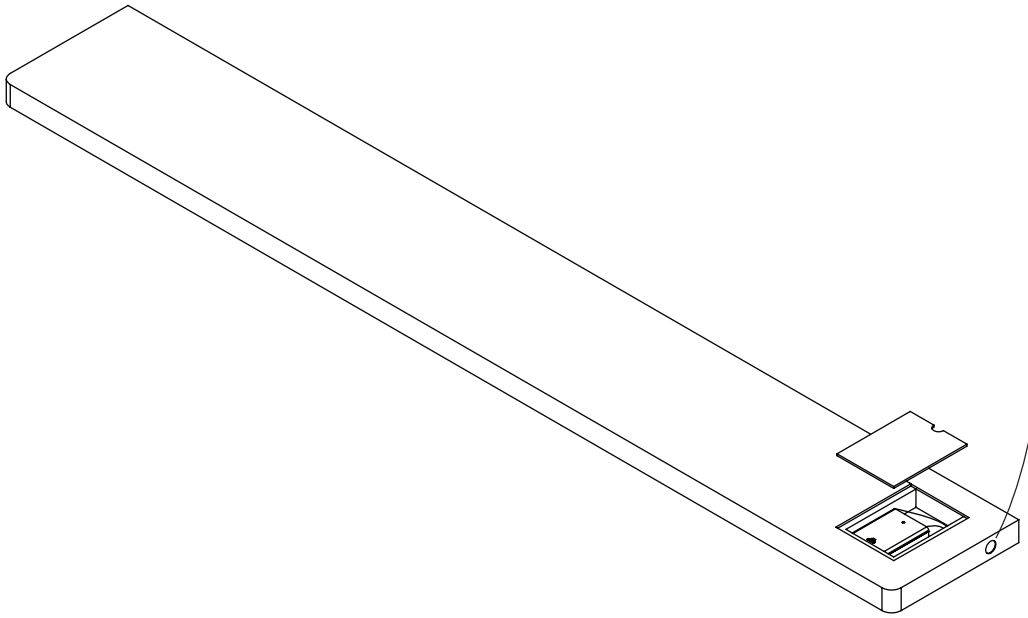

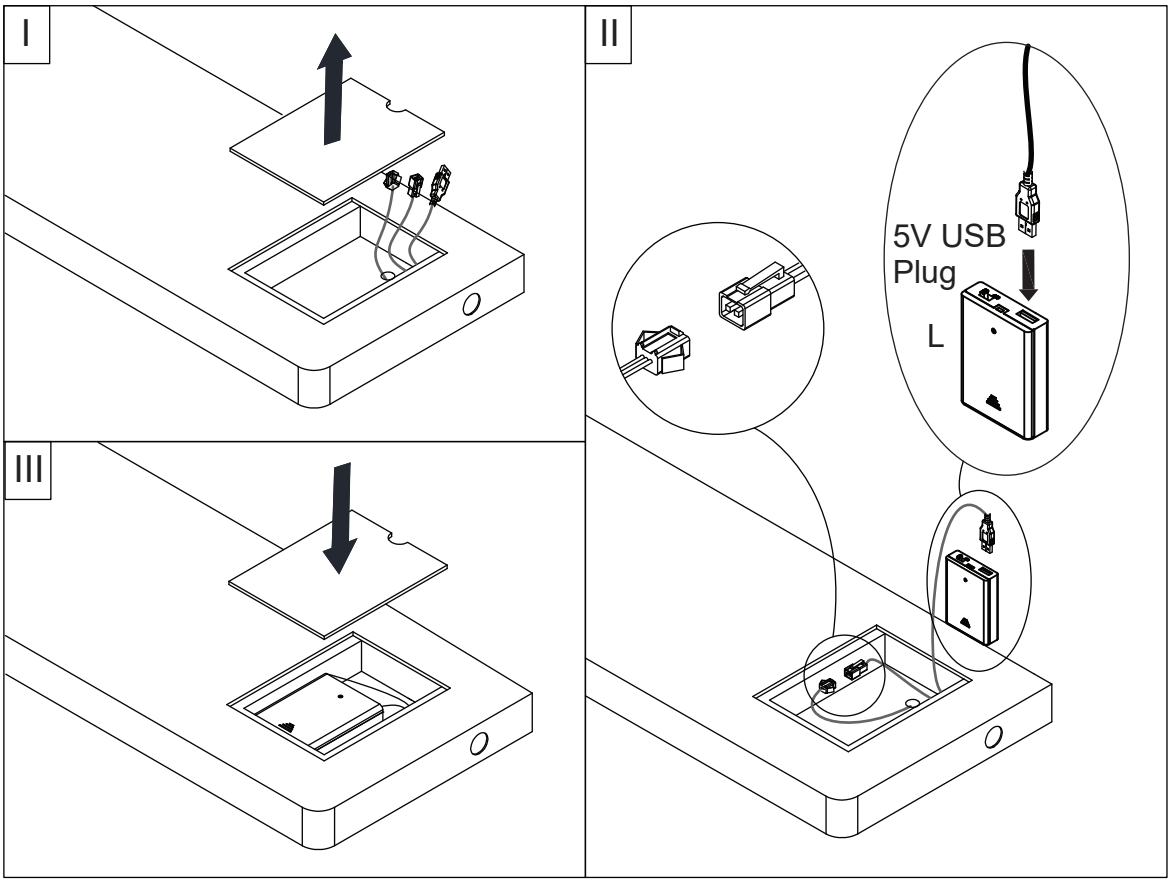

For this step:

Tools required

Fittings required

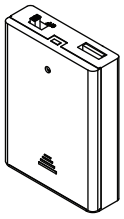

L x1

One battery box is supplied, for shelf only

CHANGING THE BATTERIES

SLIDE OFF THE LID

i

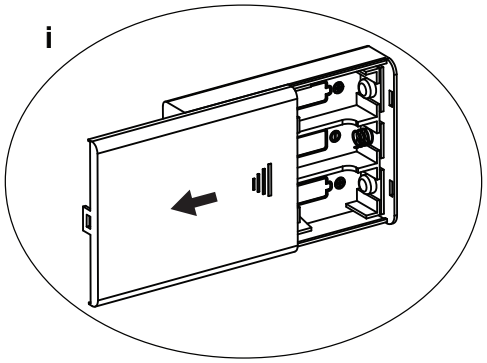

CHANGE BATTERIES

ii

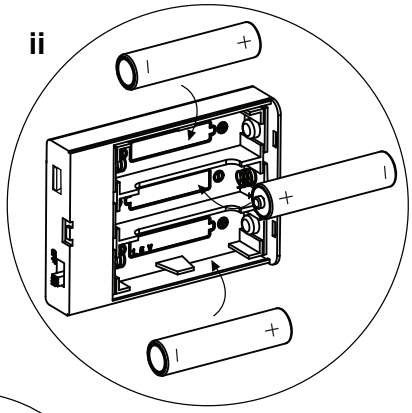

SLIDE LID BACK ON

iii

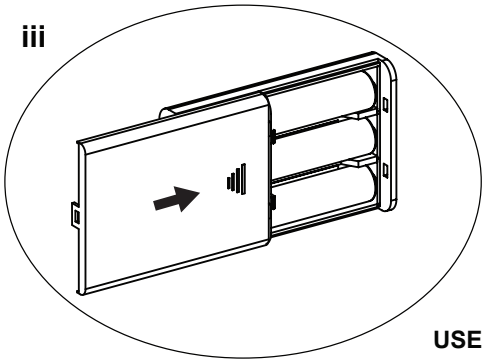

iv

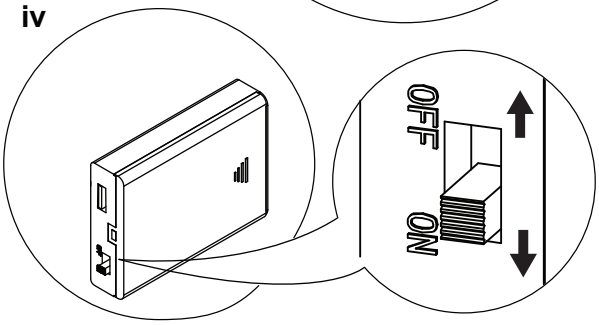

USE GOOD QUALITY AA BATTERIES. FOR BEST RESULTS USE RE-CHARGEABLE.

Assembly Completed

Your Nina 150cm mounted TV unit & LED shelf is now completely assembled.

Periodically check to ensure that the components are in their proper position, free from damage.

Also, make sure the connectors are tight and secure.

Keep instructions for future reference

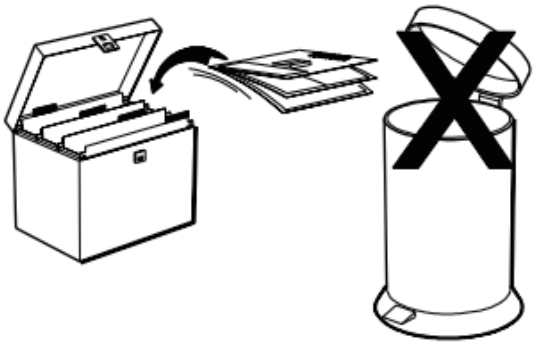

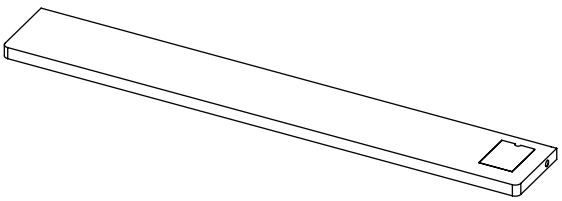

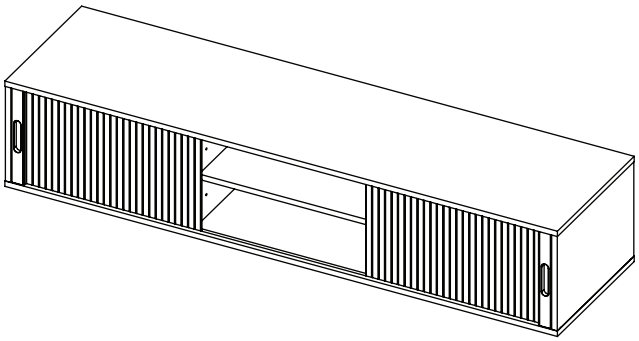

Represented by: Authorised Rep Compliance Ltd
71 Lower Baggot Street
Dublin
D02 P593
Ireland
www.arccompliance.com

Supplied by : GFW THE FURNITURE WAREHOUSE
Waterside Distribution Centre
Waterside Business Park
Johnson Road
Lancashire
BB3 3RT
www.gfwlimited.co.uk