MAEVE DRESSING TABLE ASSEMBLY INSTRUCTIONS

Thank you for purchasing the MAEVE DRESSING TABLE.Please read the instruction carefully to ensure safe operation of the product.

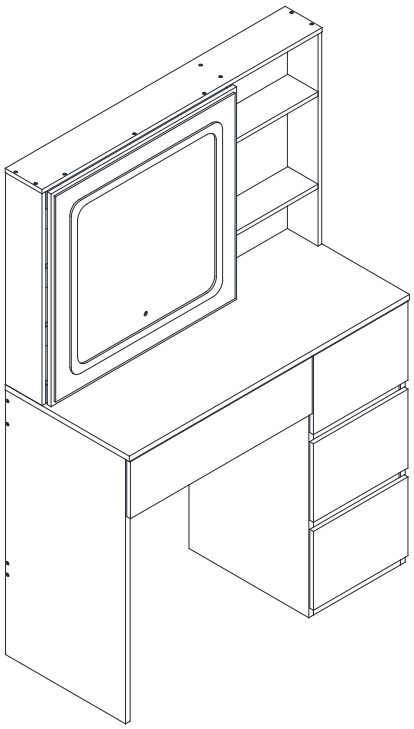

PLEASE READ this sheet prior to assembly to familiarize yourself with the various stages of construction.

Carefully open the pack supplied and check the contents against the parts and fittings checklist. Do not destroy any of the packaging until you are certain that you have all the necessary parts for the assembly.

CAUTION:There are small components used in the construction of this unit. These loose items should be kept away from young children whilst assembling your unit to avoid the danger of choking hazards.

Tools Required

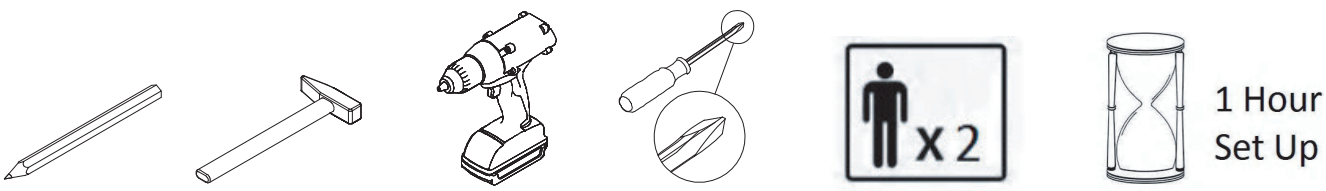

MAEVE DRESSING TABLE ASSEMBLY INSTRUCTIONS

IMPORTANT - READ CAREFULLY - RETAIN THESE INSTRUCTIONS FOR FUTURE REFERENCE.INFORMATION

INFORMATION

Due to the size of this product we recommend that it is assembled in the room intended for use. When you are ready to start, make sure that you have the right tools, plenty of space and a clean, dry area for assembly.

Unwrap all packaging materials and place the components on top of the carton box or on a clean floor to prevent it from scratching.

Check the pack and make sure you have all the parts listed.
Ensure that this product is fully assembled as illustrated before use.
Check all screws or bolts are tightened and inspect regularly
This product should only be used on firm, level ground.
Keep small parts out of reach of children.
Make sure the legs remain in contact with the ground.
Tools not included.

WARNINGS

DO NOT use power tools to construct this product.
DO NOT over tighten screws or bolts.
DO NOT use this product if parts are missing, damaged or worn.
DO NOT stand on the product.
DO NOT place very hot or very cold items on the surface unless adequately thick tablemats are used to prevent such items damaging your dresser top
Werecommend the use of the wall safety bracket provided for safety reasons.
N.B. wall fixings suitable for a solid wall are included although the wall plug provided may not be suitable for other types of walls such as hollow walls.
Fixings suitable for your wall types must be obtained separately.
If in doubt please consult a qualified trade person.
Always ensure the area to be drilled isfree from hidden electrical wires, water and gas pipes.

CARE INFORMATION

Never use scourers, abrasives or chemical cleaners.
To clean wipe with a sponge and warm soapy water. Do not use solvent based cleaners or detergents as they can bleach or damage the product.

MAEVE DRESSING TABLE ASSEMBLY INSTRUCTIONS

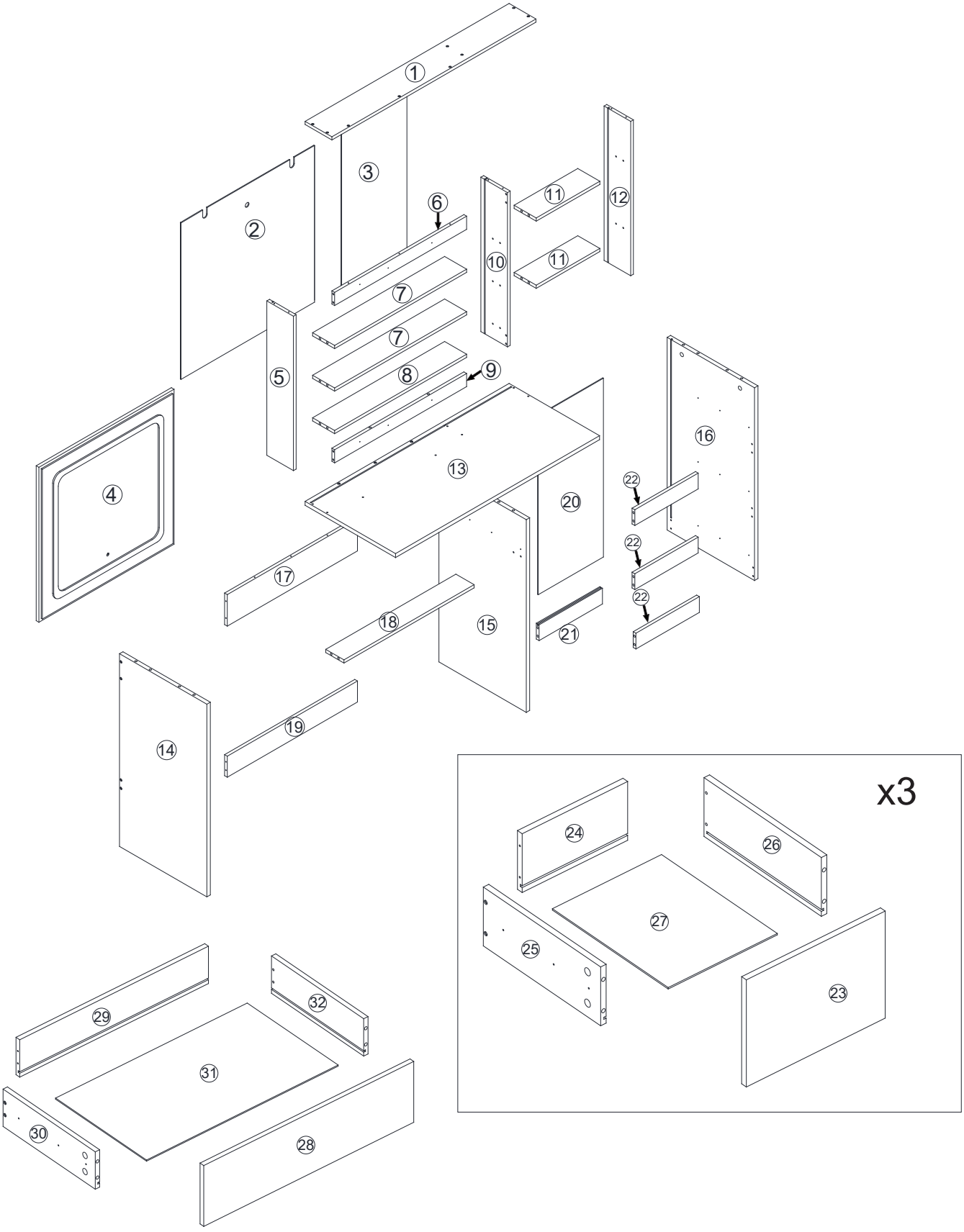

Parts

① Carton No:2/2 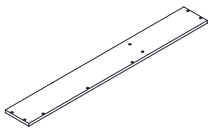	② Carton No:1/2 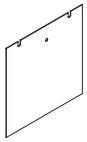	③ Carton No:2/2 	④ Carton No:1/2 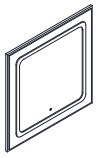
Qty:1pc Shelf top	Qty:1pc Shelf back	Qty:1pc Shelf back	Qty:1pc Mirror
⑤ Carton No:1/2 	⑥ Carton No:1/2 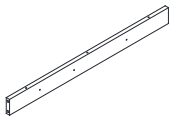	⑦ Carton No:1/2 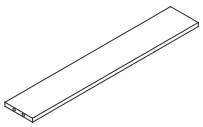	⑧ Carton No:1/2 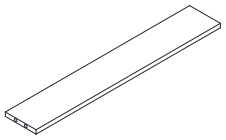
Qty:1pc Shelf left side panel	Qty:1pc Support bar	Qty:2pcs Long shelf	Qty:1pc Long shelf
⑨ Carton No:1/2 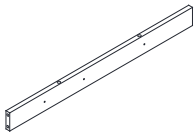	⑩ Carton No:1/2 	⑪ Carton No:1/2 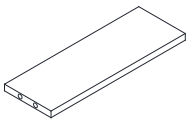	⑫ Carton No:1/2 
Qty:1pc Support bar	Qty:1pc Vertical support panel	Qty:2pcs Short shelf	Qty:1pc Shelf right side panel
⑬ Carton No:2/2 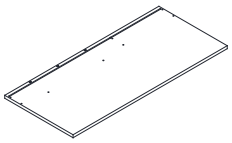	⑭ Carton No:2/2 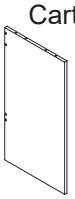	⑮ Carton No:2/2 	⑯ Carton No:2/2 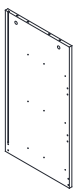
Qty:1pc Table top	Qty:1pc Table left leg	Qty:1pc Table middle leg	Qty:1pc Table right leg
⑰ Carton No:1/2 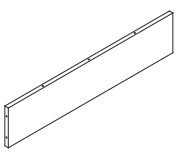	⑱ Carton No:1/2 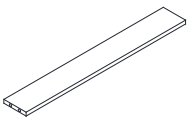	⑲ Carton No:1/2 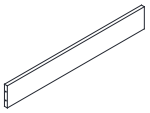	⑳ Carton No:2/2 
Qty:1pc Rear support bar	Qty:1pc Support bar	Qty:1pc Rear support bar	Qty:1pc Cabinet back panel

Parts

㉑ Carton No:1/2 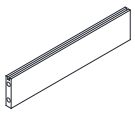	㉒ Carton No:1/2 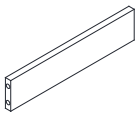	㉓ Carton No:1/2 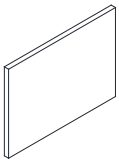	㉔ Carton No:2/2 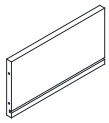
Qty:1pc Bottom support bar	Qty:3pcs Front support bar	Qty:3pcs Cabinet drawer front	Qty:3pcs Cabinet drawer back
㉕ Carton No:2/2 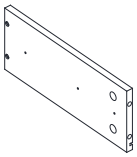	㉖ Carton No:2/2 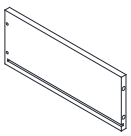	㉗ Carton No:1/2 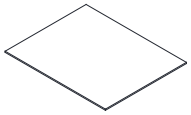	㉘ Carton No:1/2 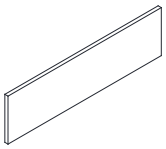
Qty:3pcs Cabinet drawer left	Qty:3pcs Cabinet drawer right	Qty:3pcs Cabinet drawer bottom	Qty:1pc Table drawer front
㉙ Carton No:1/2 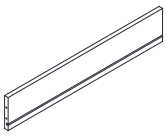	㉚ Carton No:1/2 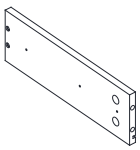	㉛ Carton No:1/2 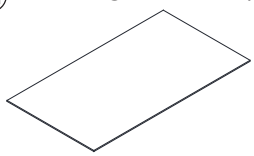	㉜ Carton No:1/2 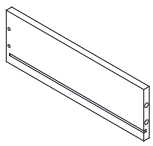
Qty:1pc Table drawer back	Qty:1pc Table drawer left	Qty:1pc Table drawer bottom	Qty:1pc Table drawer right

Fittings(to scale)

Ref	Dimensions	Qty
A	Cam bolt(5x40mm)	64
B	Cam(10x15mm)	64
C	Wood dowel(6x30mm)	14
E	Screw(3.5x12mm)	60
F	Screw(5x35mm)	28
J	Screw(4x35mm)	16

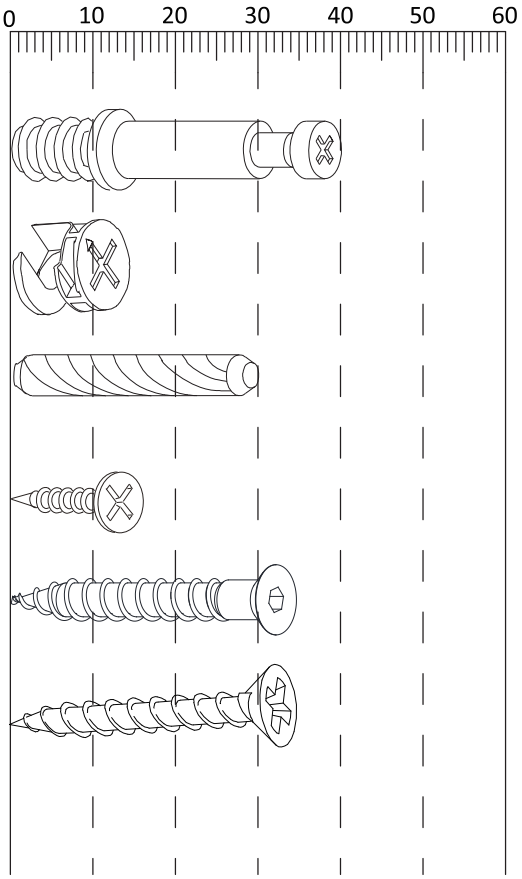

(Not to scale)

G	Allen key M3	1	
H	Slide	2	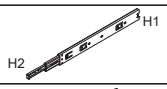
K	Wall Plug	2	
L	Wall Bracket	2	
M	Slide	4	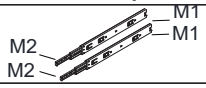
N	Back clips	12	

MAEVE DRESSING TABLE ASSEMBLY INSTRUCTIONS

Layout Parts on Soft Surface

Lay out all parts on a soft surface i.e. Rug, Carpet or Packaging Carton

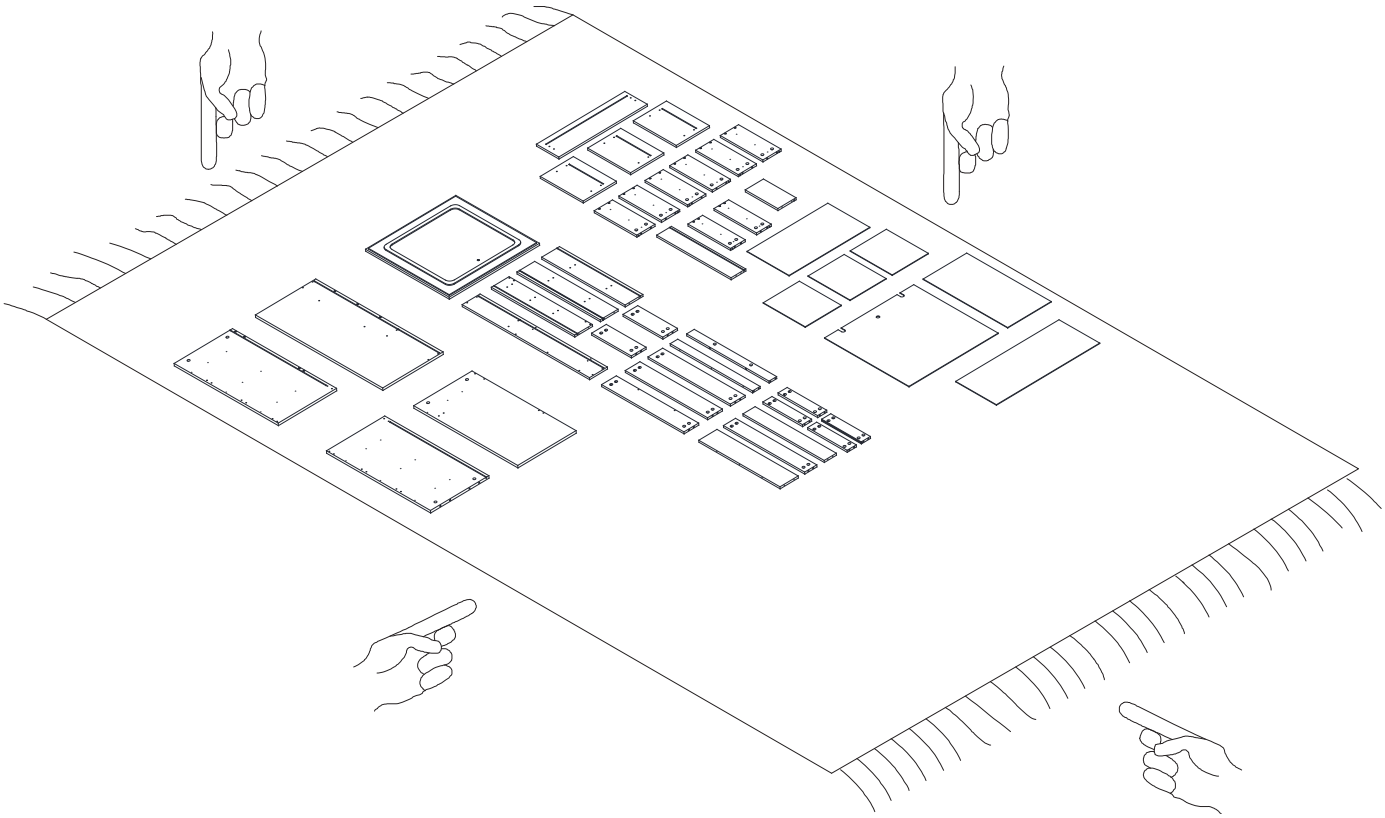

CAUTION:There are many small components used in the construction of this product. Please keep these components away from young children whilst assembling this product. If you keep the fittings in a bowl during assembly you will be less likely to lose them!

MAEVE DRESSING TABLE ASSEMBLY INSTRUCTIONS

STEP 1

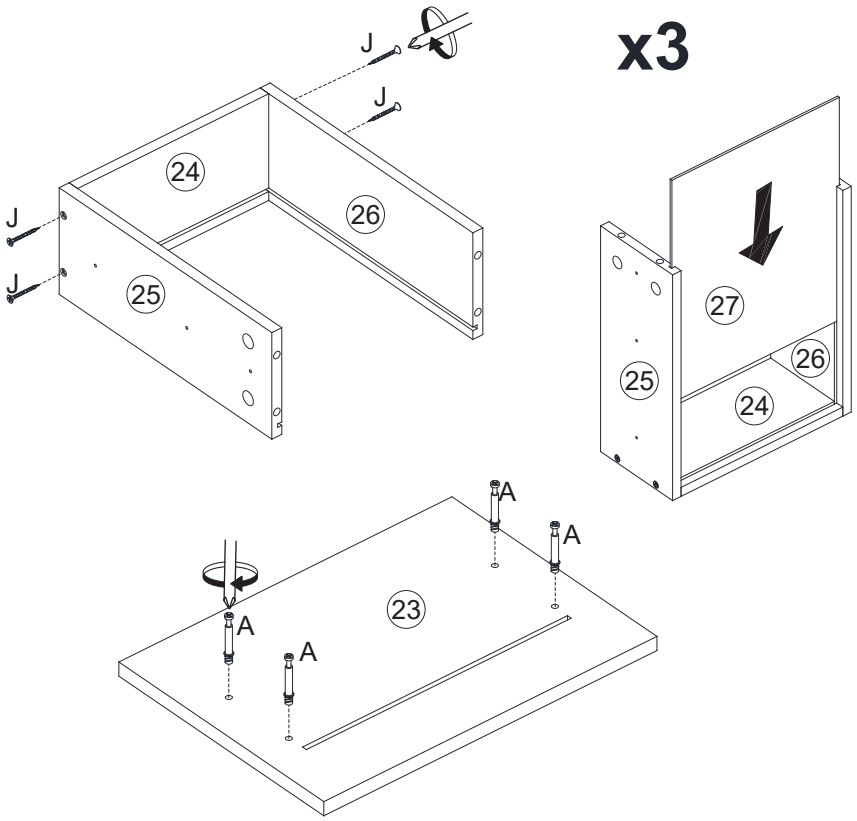

Parts Required

(23) Cabinet drawer front x3
(24) Cabinet drawer back x3
(25) Cabinet drawer left x3
(26) Cabinet drawer right x3
(27) Cabinet drawer bottom x3

A Cam bolt x12
J Screw x12

STEP 2

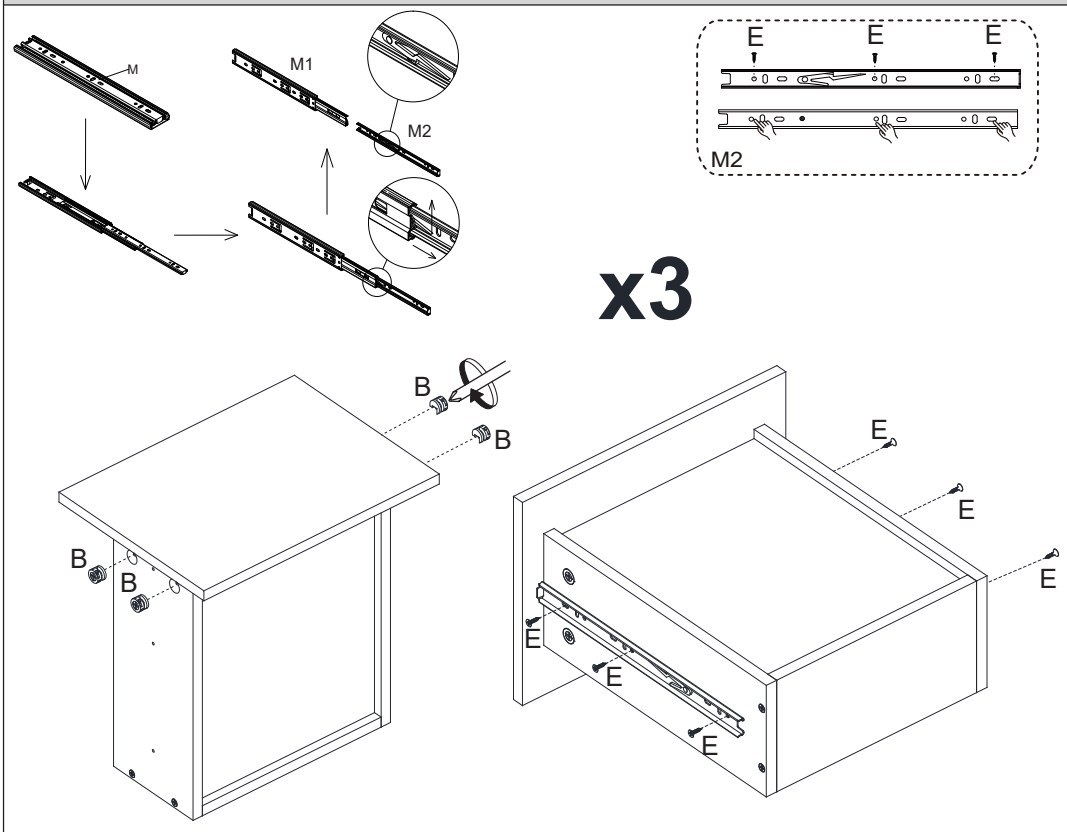

Parts Required

B Cam x12
E Screw x18
M2 Slide x6

MAEVE DRESSING TABLE ASSEMBLY INSTRUCTIONS

STEP 3

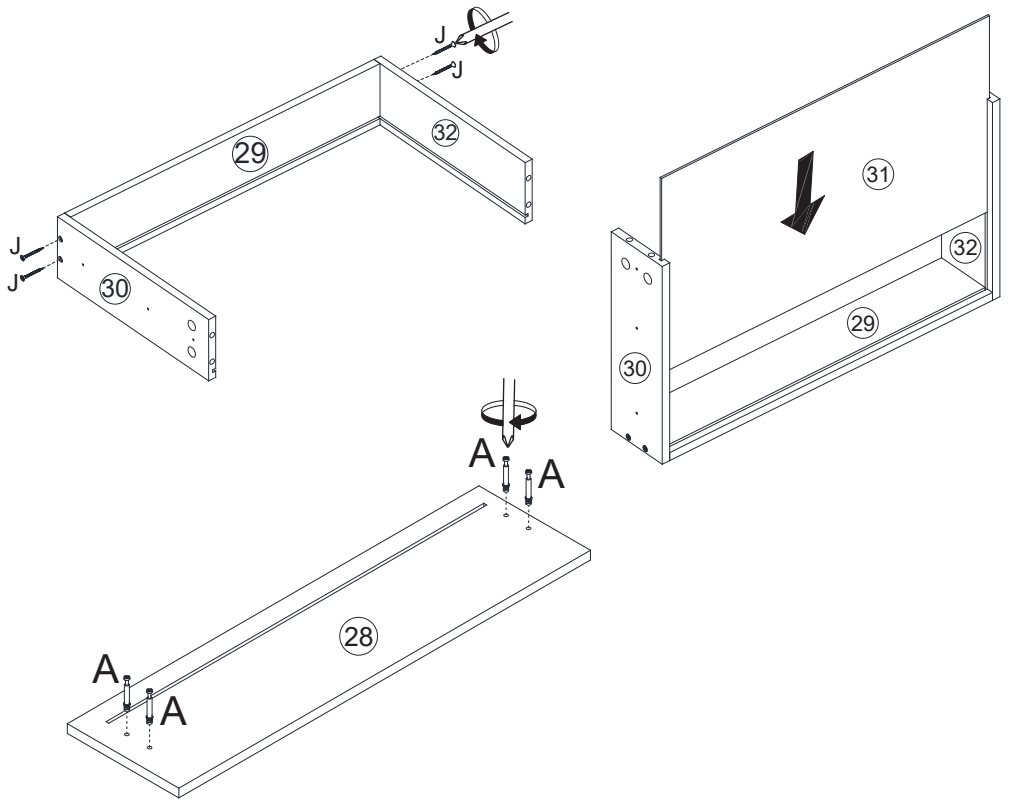

Parts Required

28 Table drawer front x1
29 Table drawer back x1
30 Table drawer left x1
31 Table drawer bottom x1
32 Table drawer right x1

A Cam bolt x4
J Screw x4

STEP 4

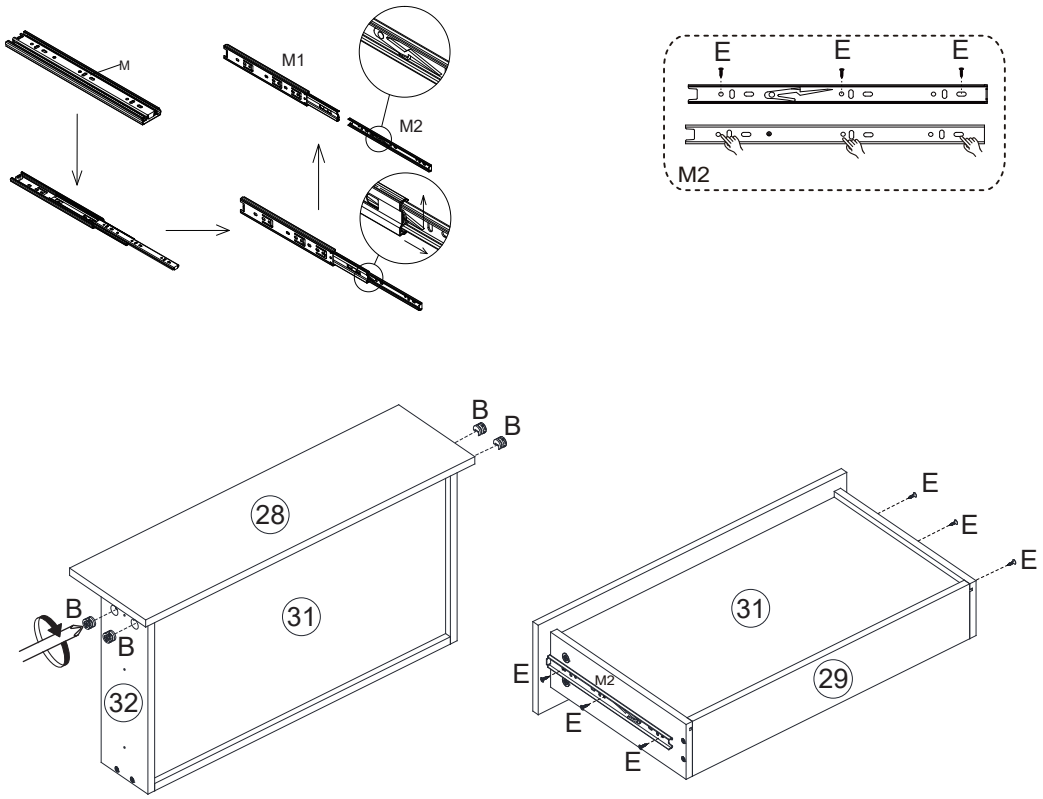

Parts Required

B Cam x4
E Screw x6
M2 Slide x2

MAEVE DRESSING TABLE ASSEMBLY INSTRUCTIONS

STEP 5

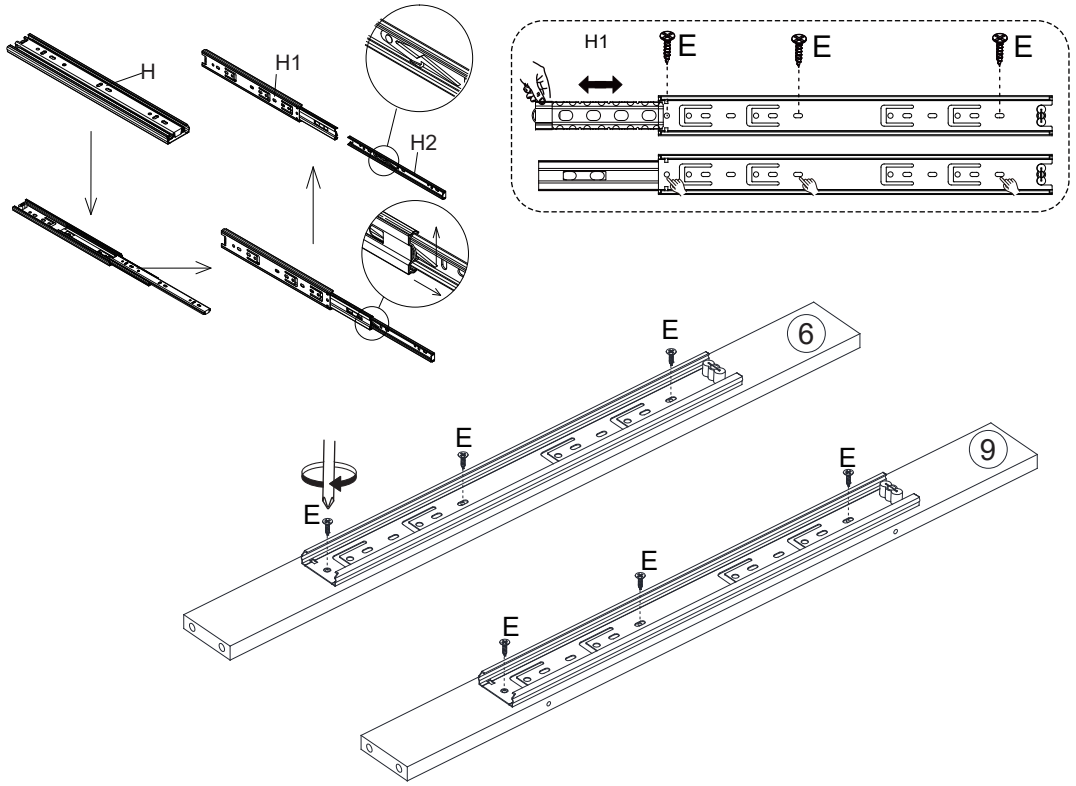

Parts Required

6 Support bar x1

9 Support bar x1

H1 Slide x2

E Screw x6

STEP 6

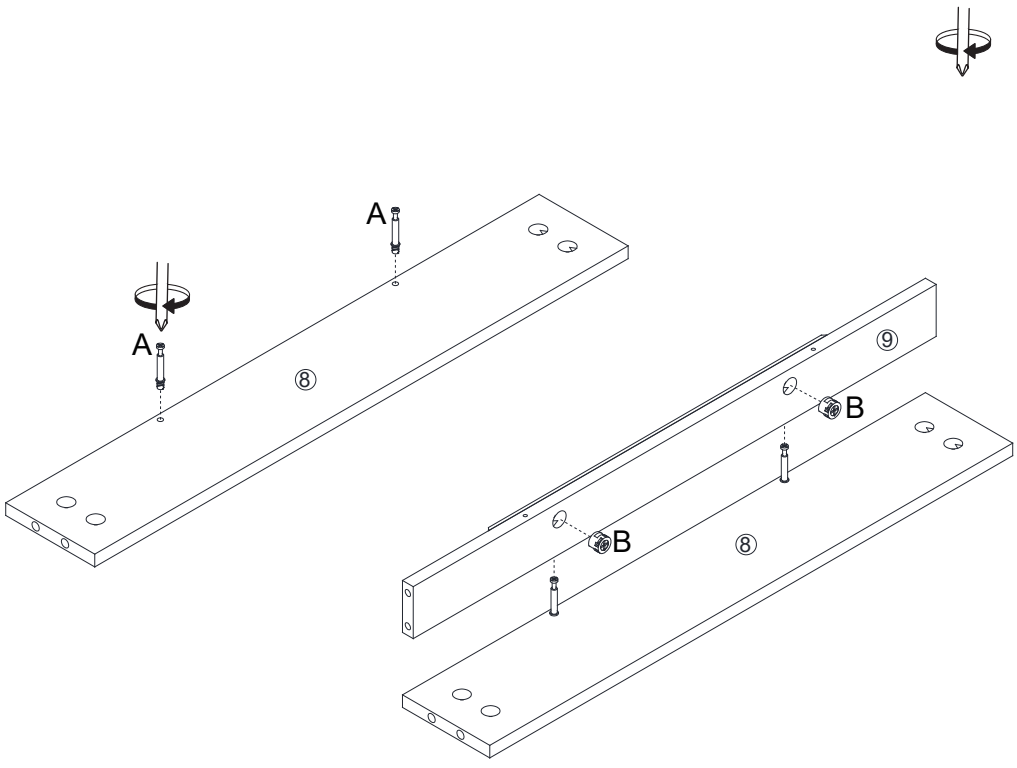

Parts Required

8 Long shelf x1

9 Support bar x1

A Cam bolt x2

B Cam x4

MAEVE DRESSING TABLE ASSEMBLY INSTRUCTIONS

STEP 7

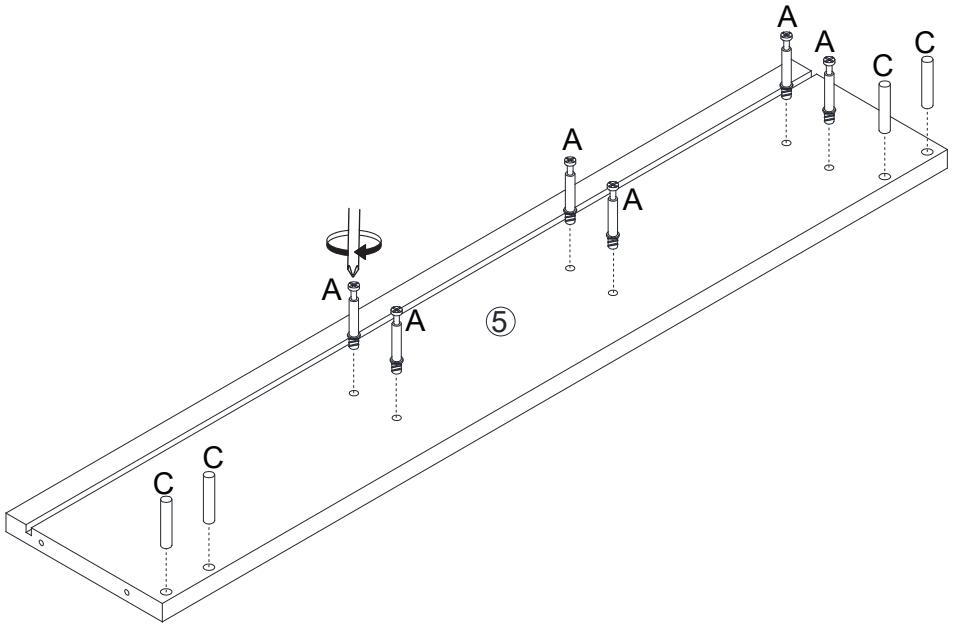

Parts Required

⑤ Shelf left side panel x1

A Cam bolt x6

C Wood dowel x4

STEP 8

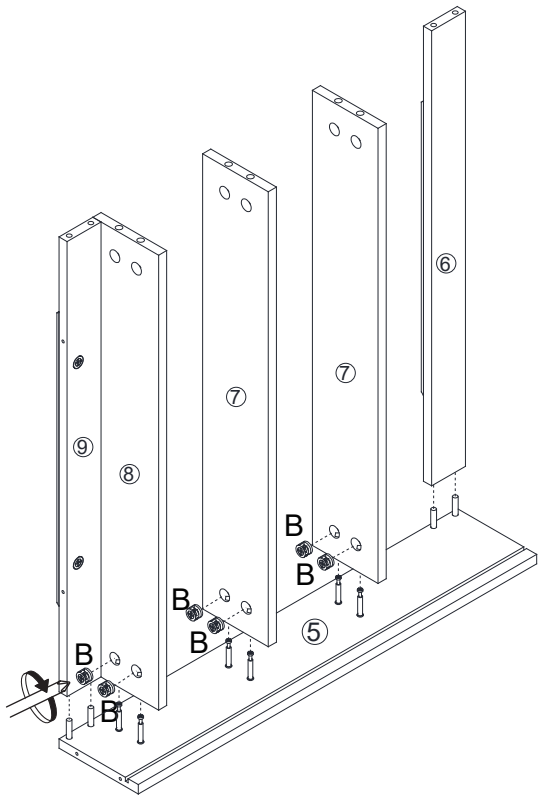

Parts Required

⑤ Shelf left side panel x1

⑥ Support bar x1

⑦ Long shelf x2

⑧ Long shelf x1

⑨ Support bar x1

B Cam x6

MAEVE DRESSING TABLE ASSEMBLY INSTRUCTIONS

STEP 9

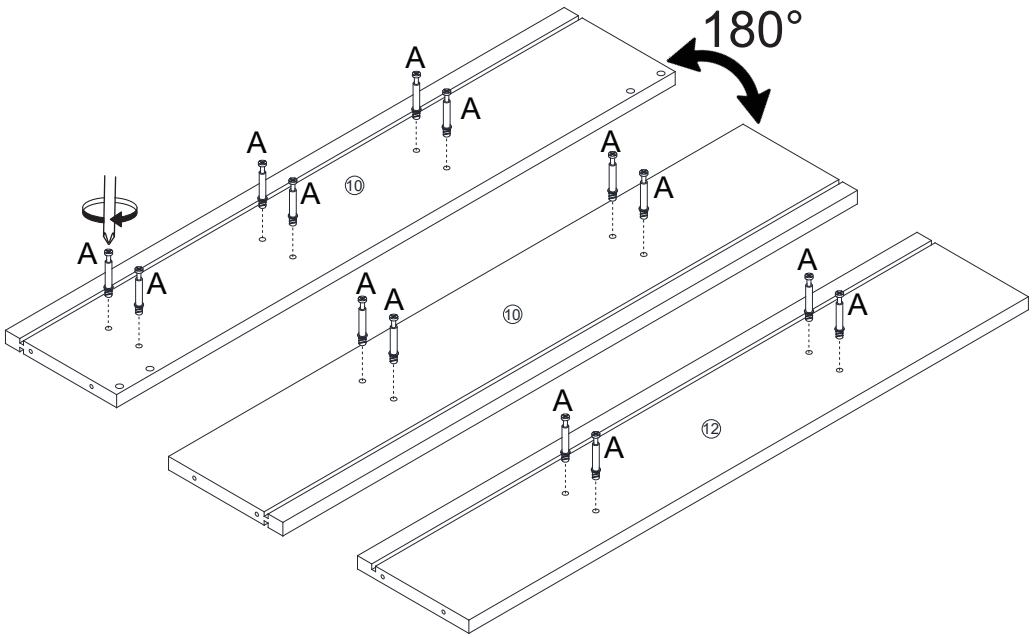

Parts Required

10 Vertical support panel x1

12 Shelf right side panel x1

A Cam bolt x14

STEP 10

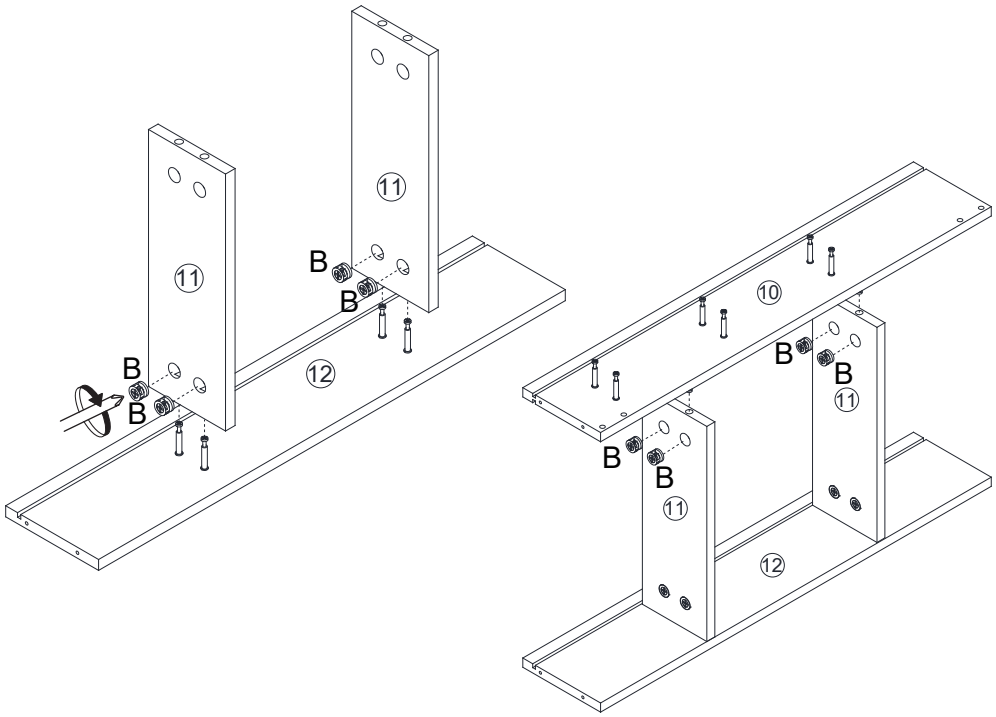

Parts Required

10 Vertical support panel x1

11 Short shelf x2

12 Shelf right side panel x1

B Cam x8

MAEVE DRESSING TABLE ASSEMBLY INSTRUCTIONS

STEP 11

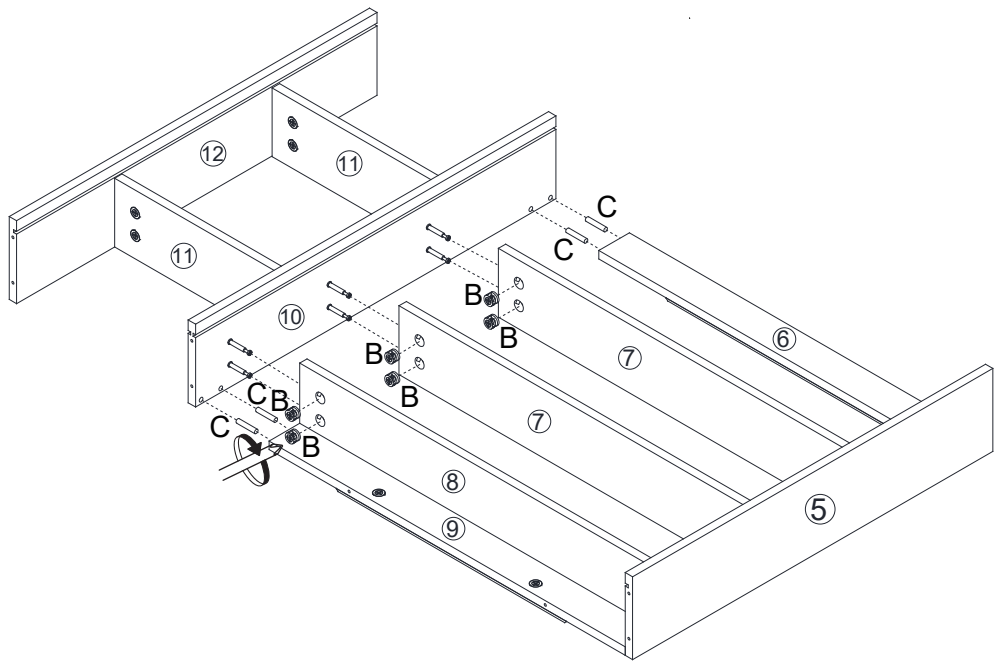

Parts Required

B Cam x6

C Wood dowel x4

STEP 12

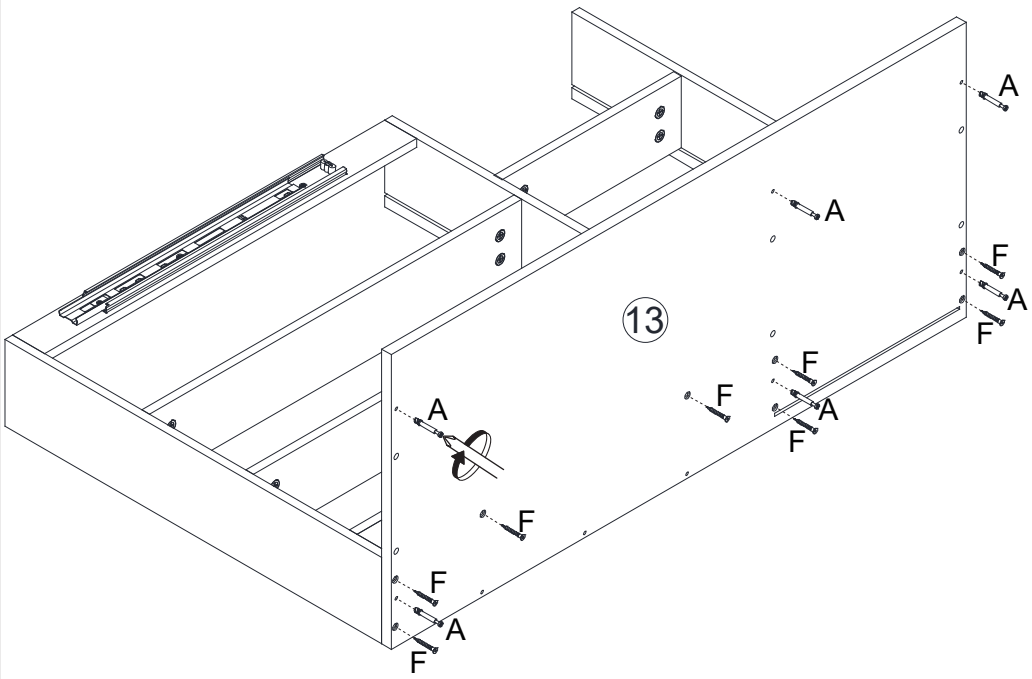

Parts Required

13 Table top x1

A Cam bolt x6

F Screw x8

G Allen key M3 x1

MAEVE DRESSING TABLE ASSEMBLY INSTRUCTIONS

STEP 13

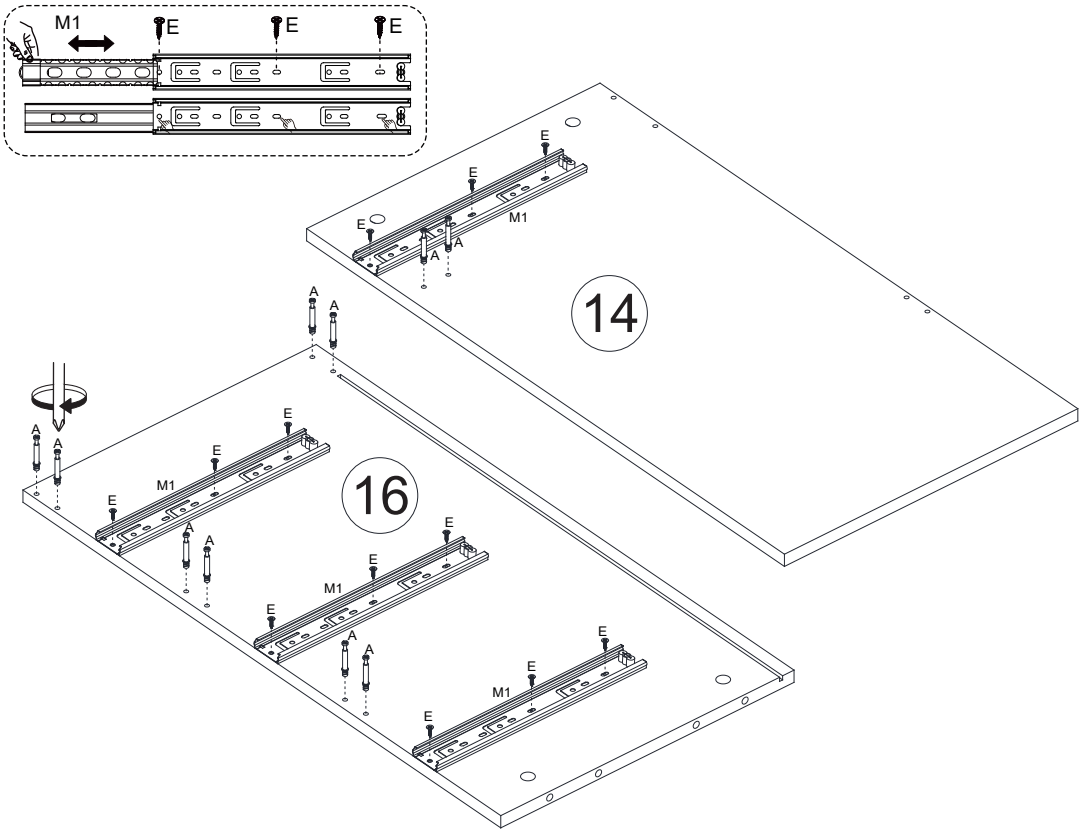

Parts Required

(14) Table left leg x1

(16) Table right leg x1

M1 Slide x4

A Cam bolt x10

E Screw x12

STEP 14

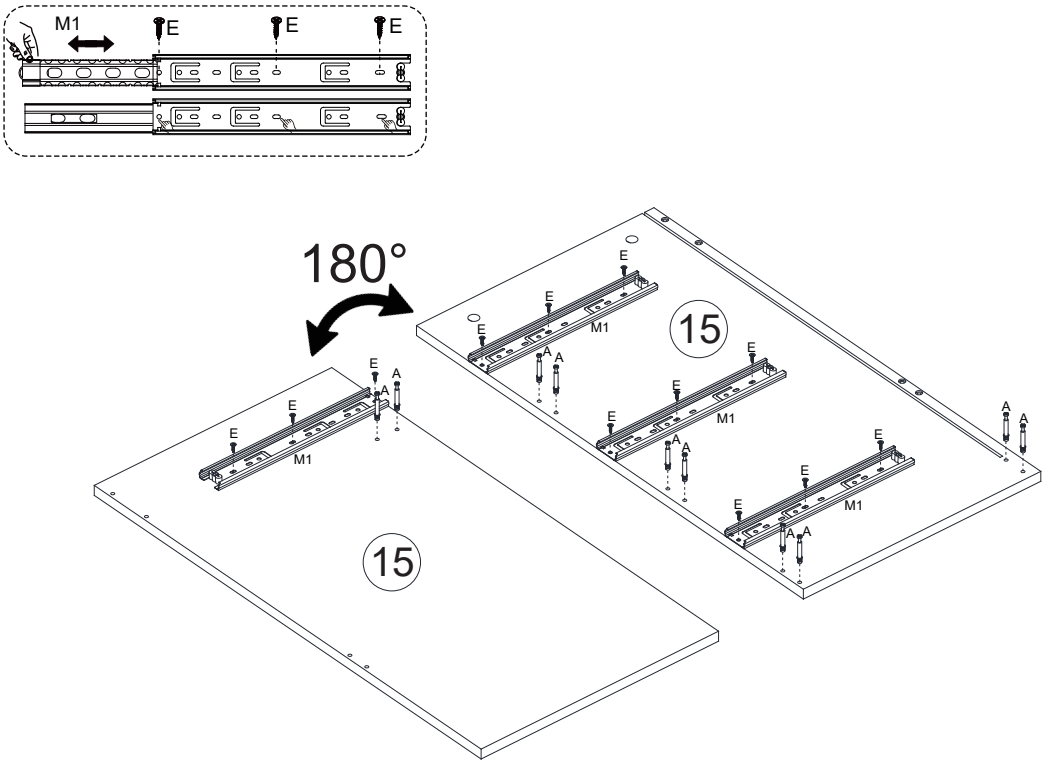

Parts Required

(15) Table middle leg x1

M1 Slide x4

A Cam bolt x10

E Screw x12

MAEVE DRESSING TABLE ASSEMBLY INSTRUCTIONS

STEP 15

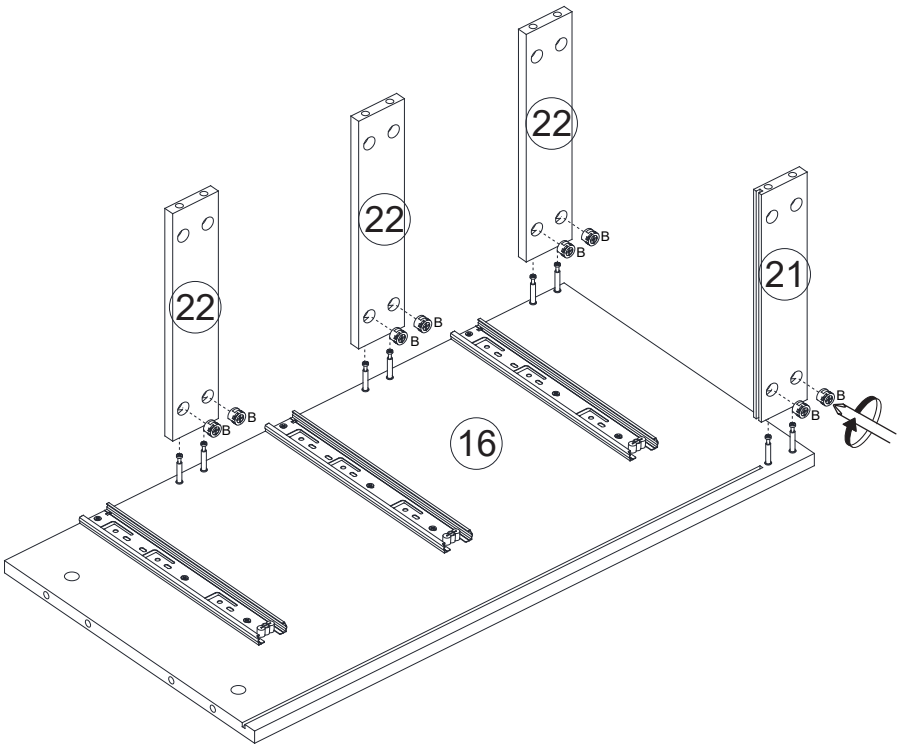

Parts Required

16 Table right leg x1
21 Bottom support bar x1
22 Front support bar x3

B Cam x8

STEP 16

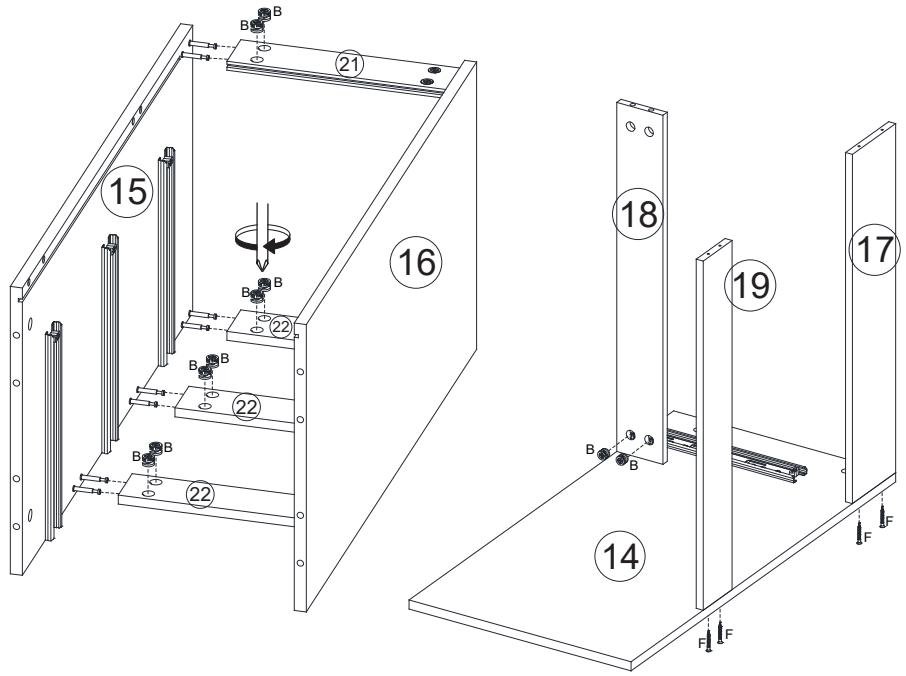

Parts Required

14 Table left leg x1
15 Table middle leg x1
17 Rear support bar x1
18 Support bar x1
19 Rear support bar x1

B Cam x10
F Screw x4
G Allen key M3 x1

MAEVE DRESSING TABLE ASSEMBLY INSTRUCTIONS

STEP 17

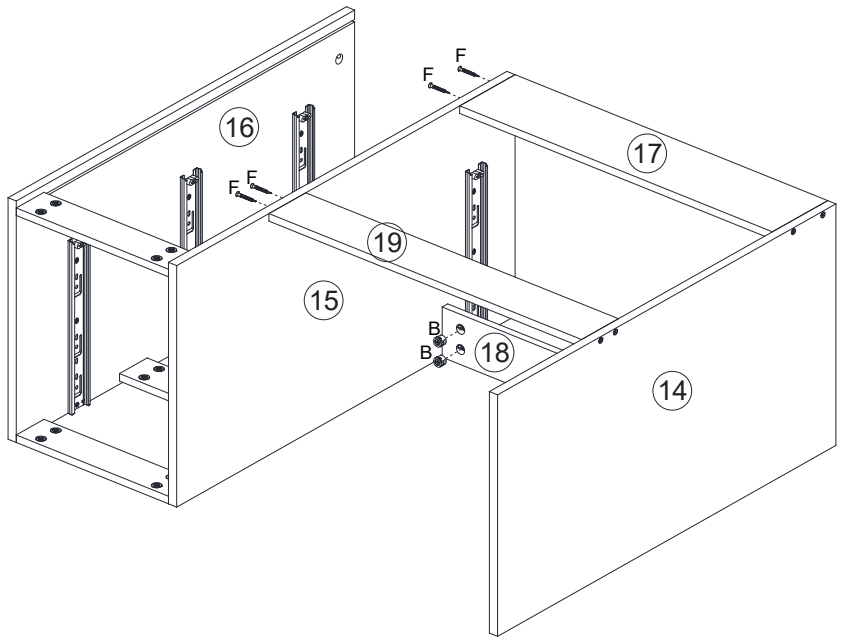

Parts Required

B Cam x2
F Screw x4
G Allen key M3 x1

STEP 18

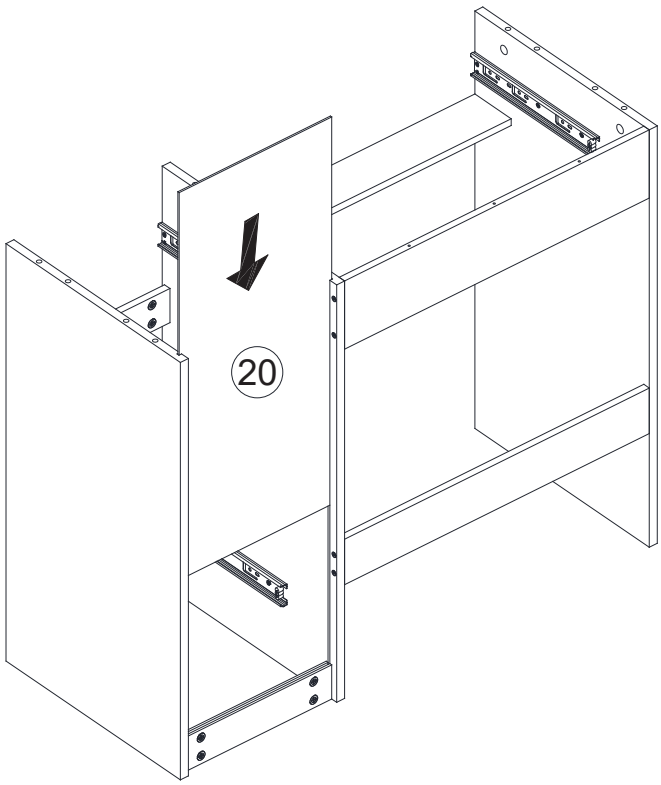

Parts Required

20 Cabinet back panel

MAEVE DRESSING TABLE ASSEMBLY INSTRUCTIONS

STEP 19

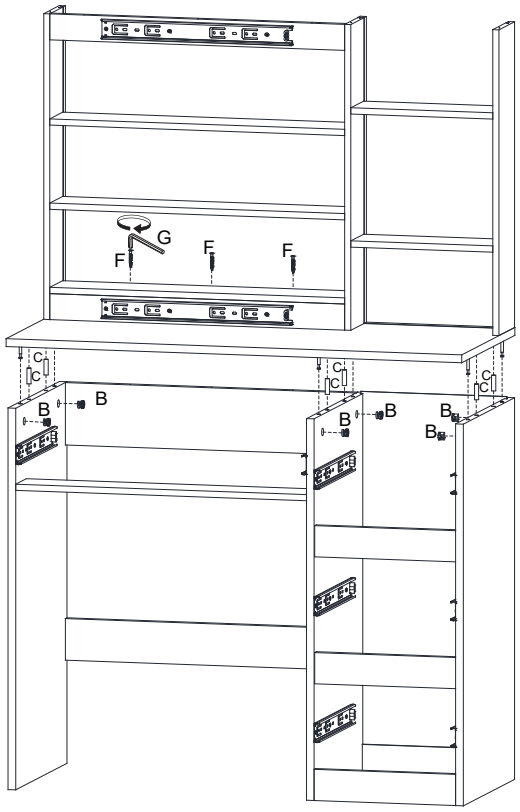

Parts Required

B Cam x 6
C Wood dowel x 6
F Screw x 3
G Allen key M3 x 1

STEP 20

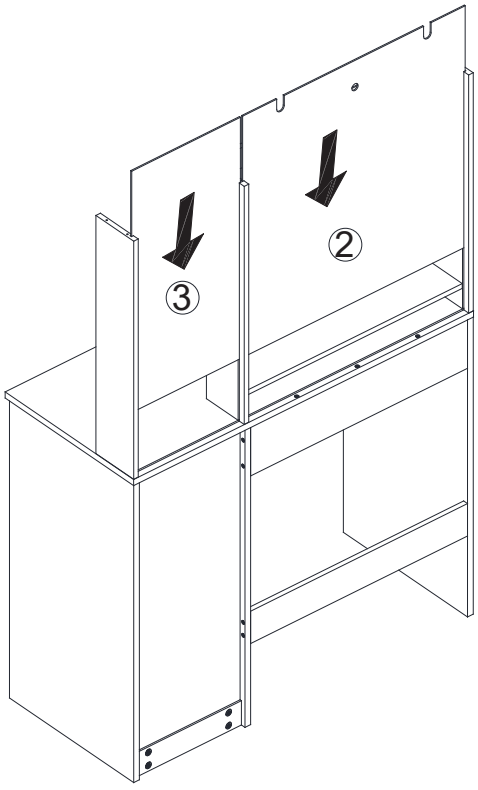

Parts Required

② Shelf back x1
③ Shelf back x1

MAEVE DRESSING TABLE ASSEMBLY INSTRUCTIONS

STEP 21

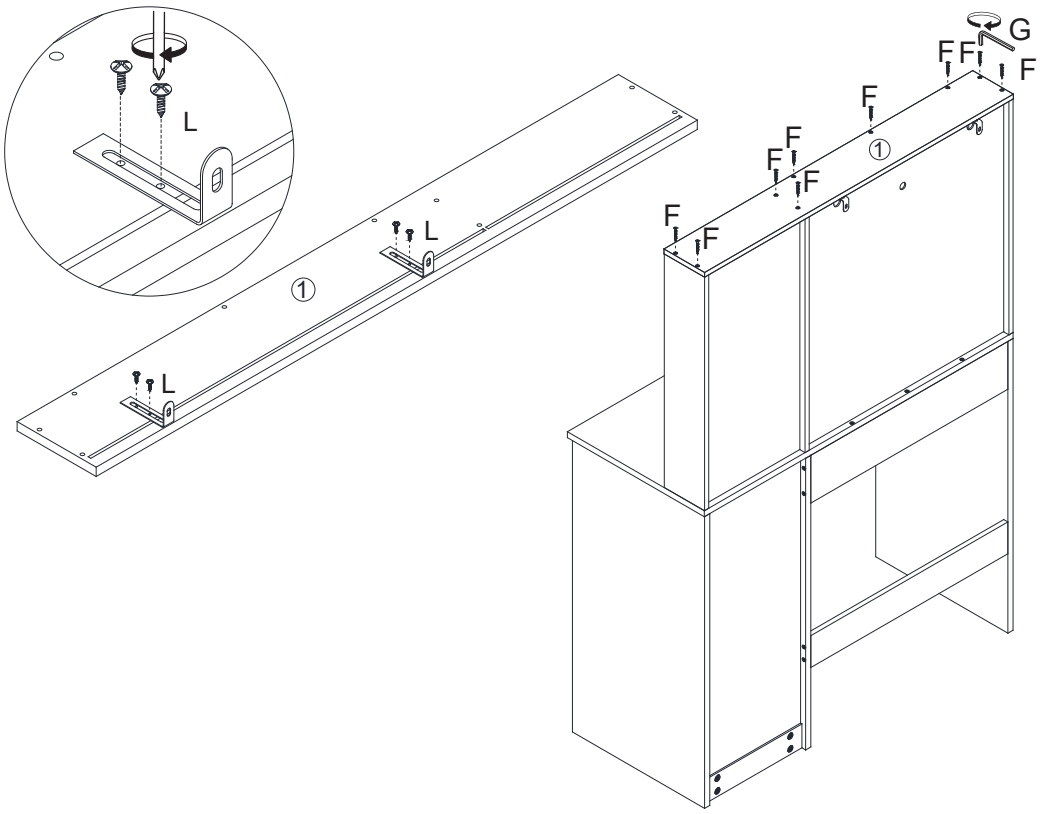

Parts Required

① Shelf top x1

F Screw x9
G Allen key M3 x1
L Wall Bracket x2

STEP 22

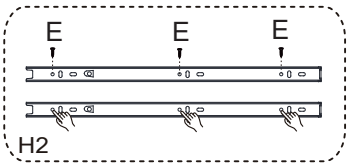

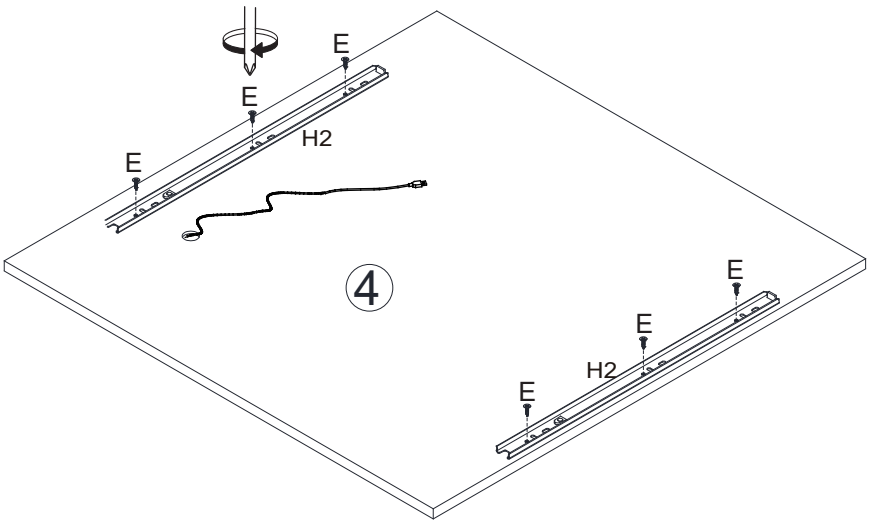

Parts Required

④ Mirror x1

H2 Slide x2
E Screw x6

MAEVE DRESSING TABLE ASSEMBLY INSTRUCTIONS

STEP 23	Parts Required

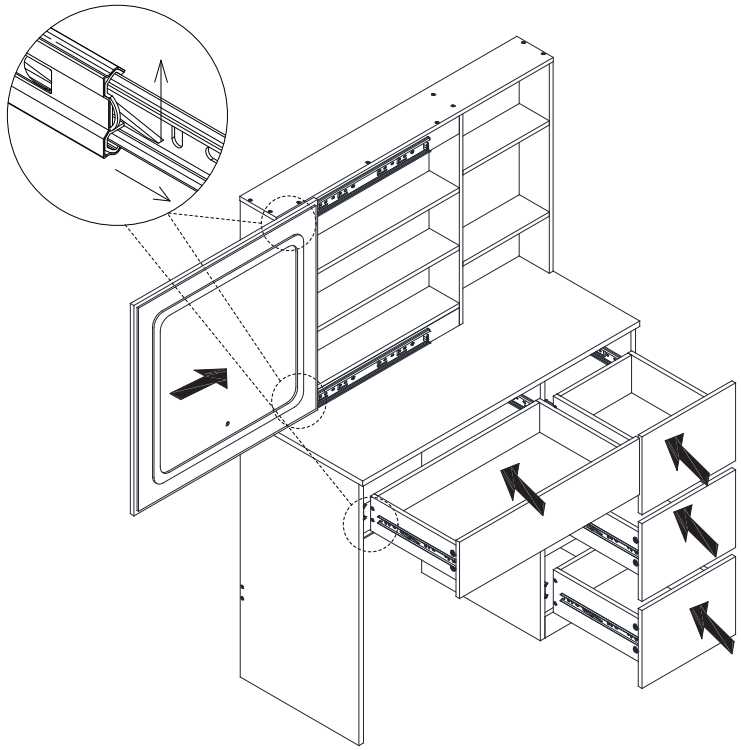

STEP 24	Parts Required

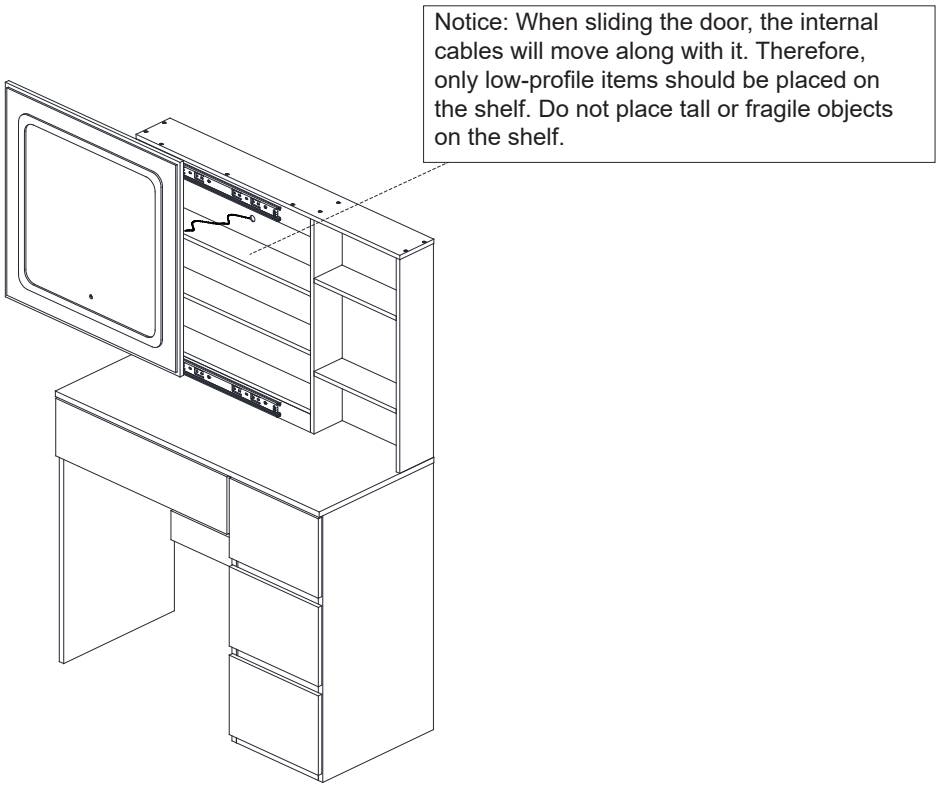

MAEVE DRESSING TABLE ASSEMBLY INSTRUCTIONS

STEP 23

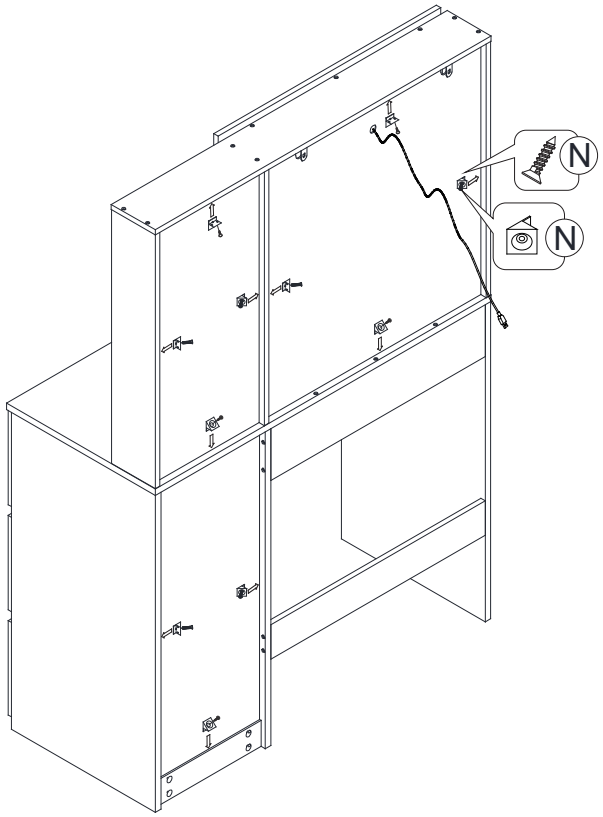

Parts Required

N Back clips x12

STEP 24

Position the table stand against the wall that it will be fastened to and using a pencil, mark the position of the screw holes onto the wall. Drill where the holes have been marked and insert the wall plugs ensuring the edge is flush with the surface of the wall.

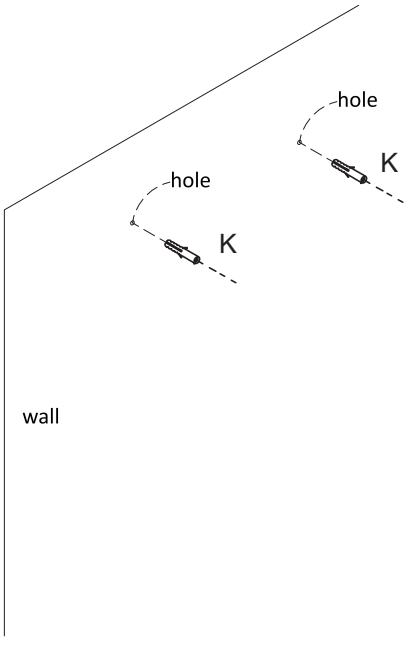

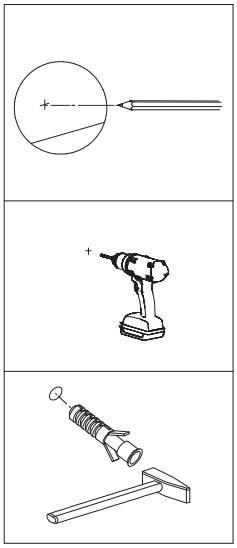

Parts Required

K Wall Plug x2

MAEVE DRESSING TABLE ASSEMBLY INSTRUCTIONS

STEP 27	Parts Required

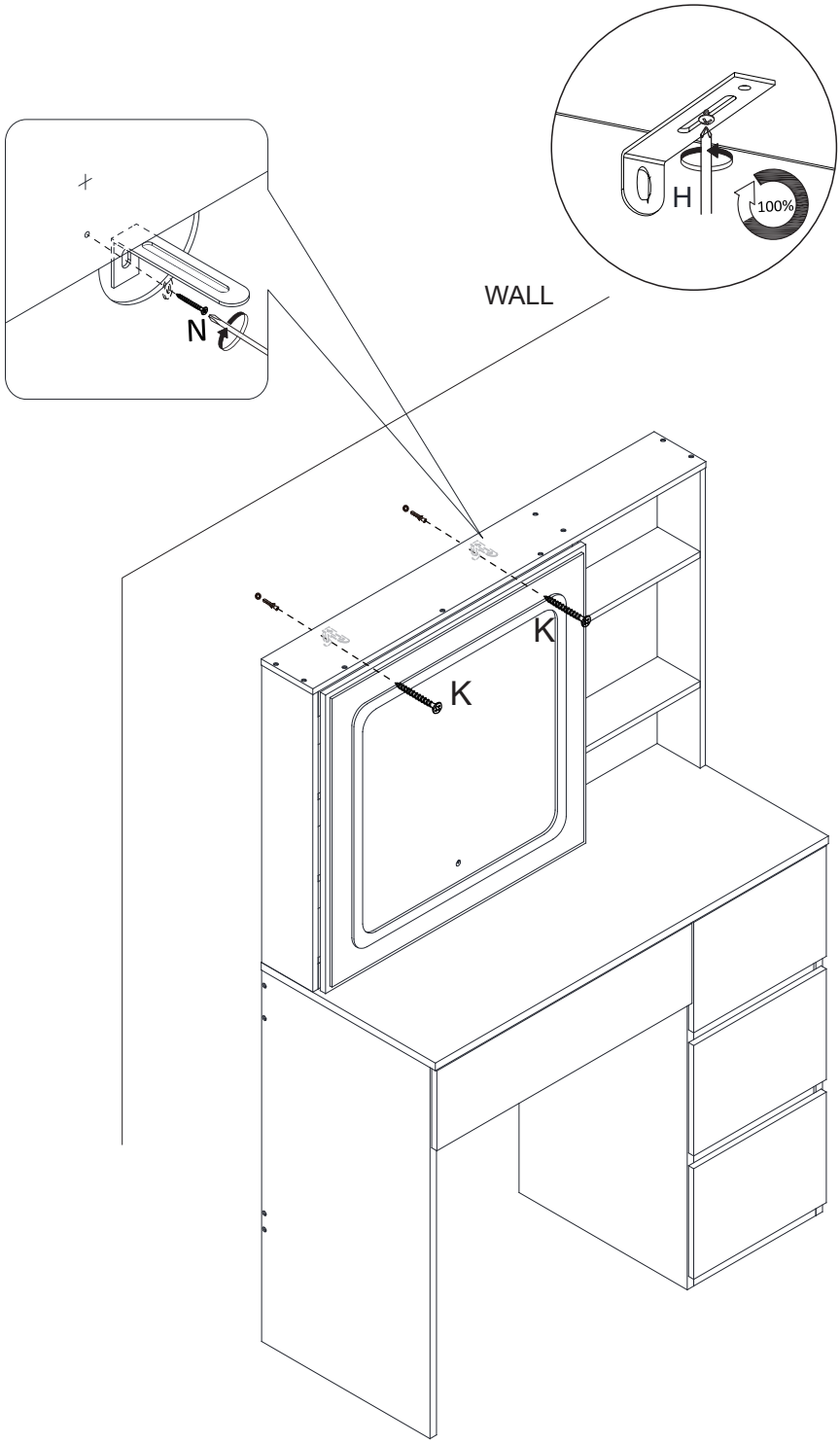

K Wall Plug x2

NOTE: The wall fixing plug Supplied with this product is suitable for solid and brick walls.For hollow and stud type walls fixing devices suitable for those type of walls must be obtained separately. Please make sure that the area to be drilled is free from hidden wires, water and gas pipes.Please ensure the fixing is safe and secure before use.

MAEVE DRESSING TABLE ASSEMBLY INSTRUCTIONS

STEP 29

Note:
The premium LED light around the mirror can be switched to natural light, warm light and cold light.
1 Touch button to change light colour.
2 Long press to adjust the brightness of each light mode.

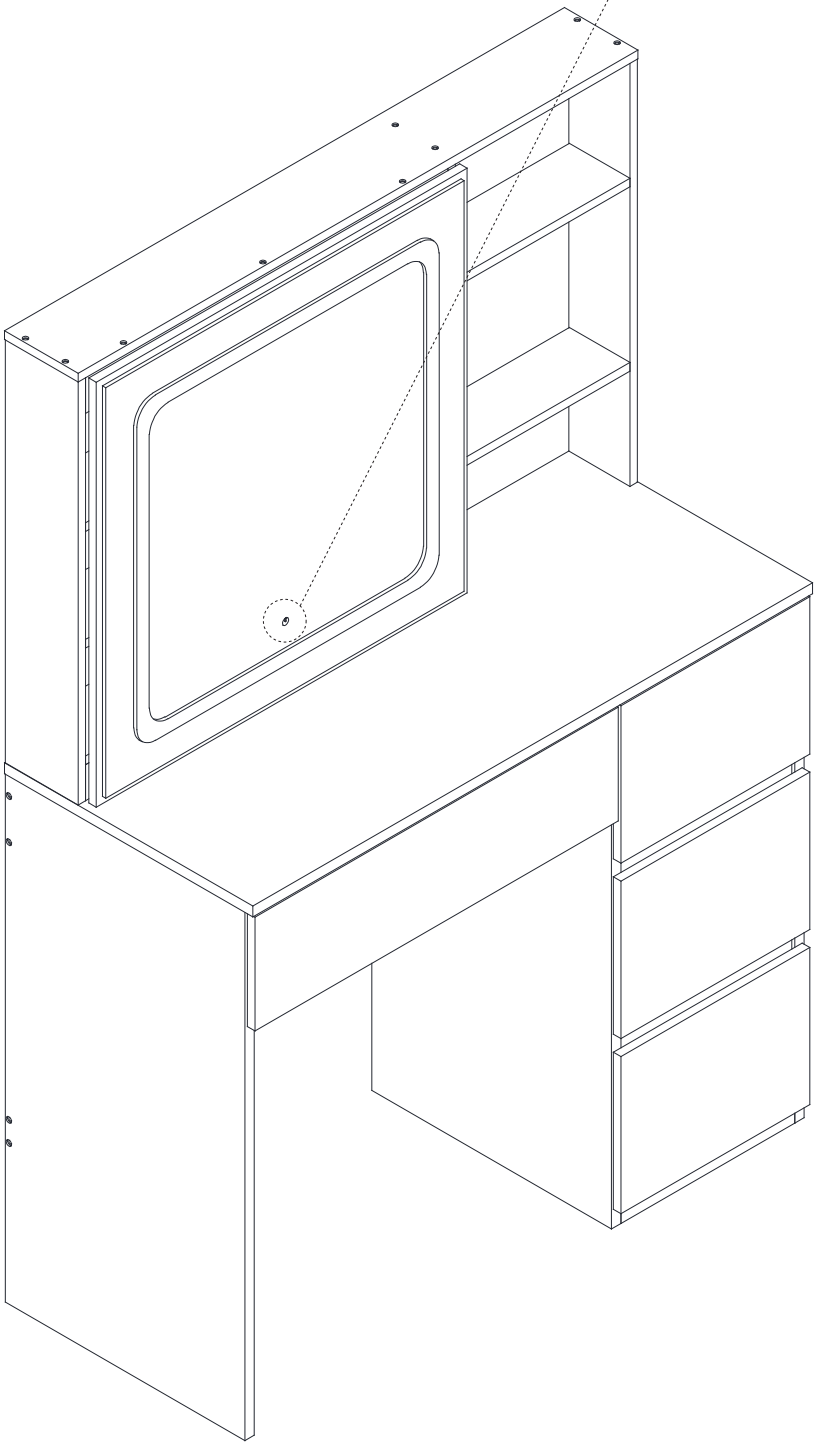

MAEVE DRESSING TABLE ASSEMBLY INSTRUCTIONS

STEP 29

Your MAEVE DRESSING TABLE is now completely assembled.
Periodically check that the components are in the correct position and free from damage.
Also make sure the connectors are tight and secure.

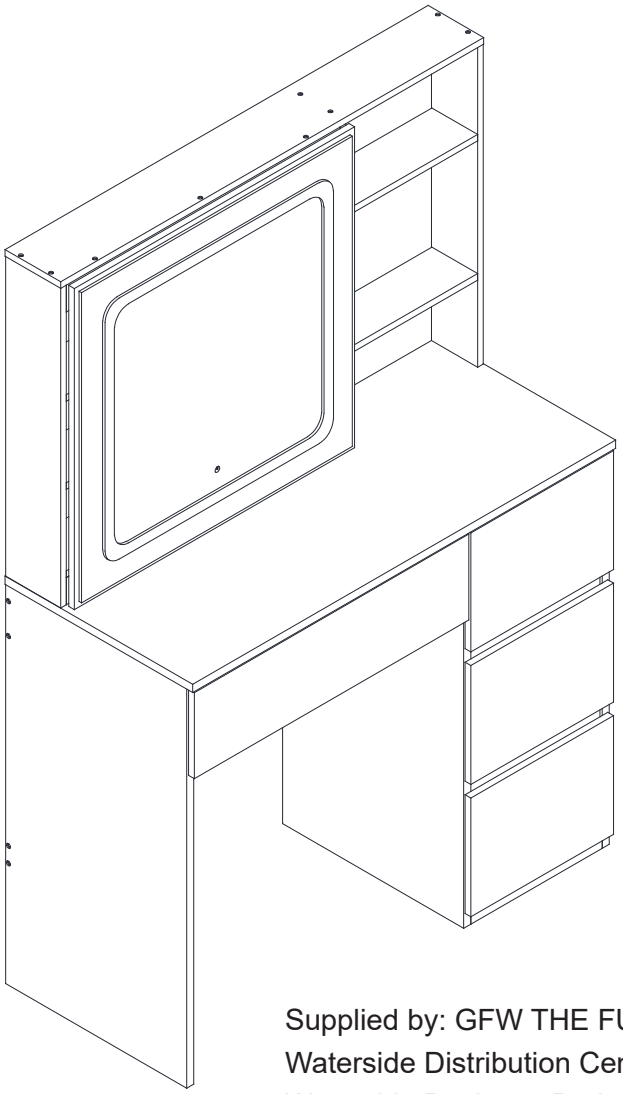

Keep instructions for future reference.

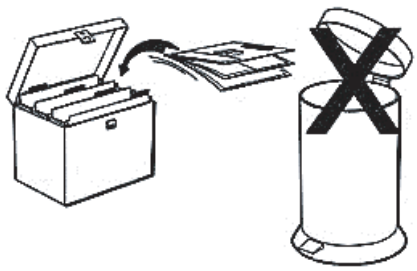

Supplied by: GFW THE FURNITURE WAREHOUSE
Waterside Distribution Centre
Waterside Business Park
Johnson Road Lancashire
BB3 3RT
www.gfwlimited.co.uk

Represented by:
Authorised Rep Compliance Ltd
71 Lower Baggot Street
Dublin
D02 P593
Ireland
www.arccompliance.com