# Ensemble™ Curve

60" x 30" Vikrell® shower with Aging in Place backerboards, right drain

**72170126**

## Features

- 4" threshold
- Durable high-gloss finish
- Three-piece tongue-and-groove walls with snap-together installation
- Convenient shelves, shaving ledge/footrest
- Aging in Place backerboards
- Innovative Dry-Block™ seal and channeled water containment system form watertight seams

## Material

- Made from solid Vikrell® material for strength, durability, and lasting beauty

## Installation

- Alcove
- Right drain
- Caulk-free installation

## Recommended Products/Accessories

K-23726 Drain treatment

## Included Components

72171120 60" x 30" Vikrell® shower base, right drain
72175106 30" Vikrell® shower end walls with Aging in Place backerboards
72372106 60" Vikrell® shower back wall with Aging in Place backerboards

## Codes/Standards

CSA B45.5/IAPMO Z124
ASTM E162
ASTM E662
HUD, UM Bulletin 73

## STERLING® Vikrell® or Acrylic Baths and Shower Bases Ten-Year Limited Warranty

See website for detailed warranty information.

## Available Colors/Finishes

*Color tiles intended for reference only.*

| Color | Code | Description |
|---|---|---|
| | 0 | White |

# Ensemble™ Curve

60" x 30" Vikrell® shower with Aging in Place backerboards, right drain

**72170126**

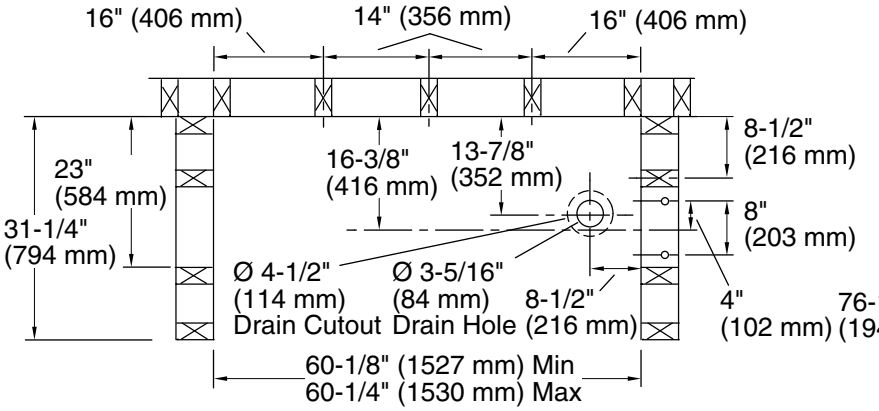


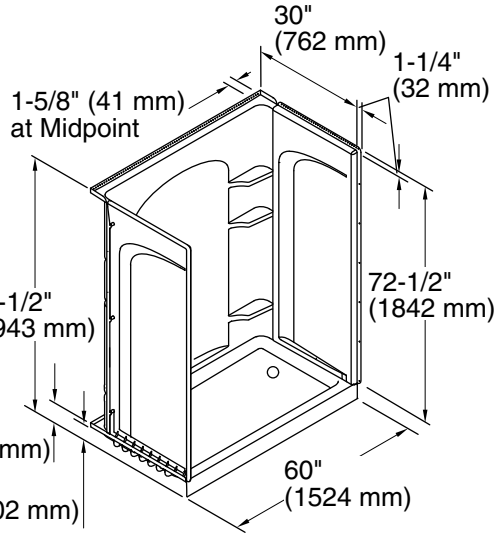


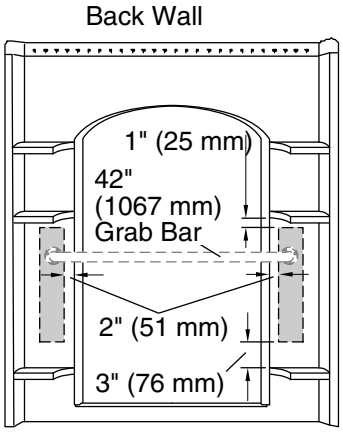


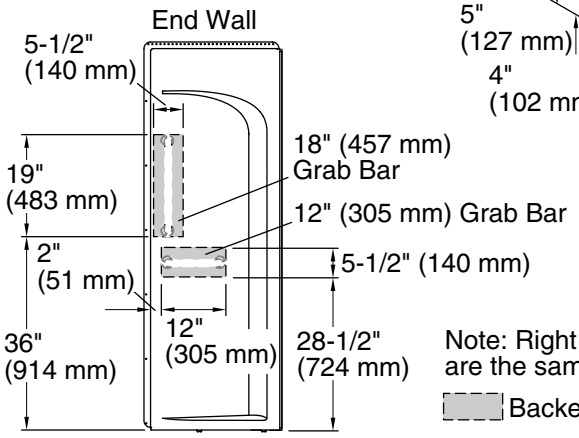


Note: Right and left end walls are the same, only mirrored.

Backer board locations

## Technical Information

All product dimensions are nominal.

| | |
|---|---|
| Drain location: | Right |
| Weight: | 131.7 lbs (59.7 kg) |
| Minimum flat for door: | 3" (76 mm) |
| Maximum door height: | 70-1/2" (1791 mm) |
| Maximum door width: | 56-5/8" (1438 mm) |

## Notes

Install this product according to the installation instructions.

Attach grab bars at the specified backerboard locations only.

Size the drain cutout to fit the drain assembly that will be used.