JTS3000DN/EN/SN

GE® 30″ Smart Built-In Self-Clean Single Wall Oven with Never Scrub Racks

DIMENSIONS AND INSTALLATION INFORMATION (IN INCHES)

NOTE: Single wall ovens are NOT approved for stacking above or below another single wall oven.

NOTE: Wall coverings, countertops and cabinets surrounding the wall oven must be able to withstand a temperature of up to 200°F (94°C).

NOTE: If the cabinet in which the wall oven is installed does not have a solid bottom, two braces or runners must be installed to support the weight of the oven. The runners and braces must support up to 220 lbs (99 kg).

NOTE: Door handle protrudes 3″ from door face. Cabinets and drawers on adjacent 45° and 90° walls should be placed to avoid interference with the handle.

ATTENTION INSTALLER: Electric wall ovens are NOT approved for installation with a plug and receptacle. They must be hardwired into an approved junction box.

IMPORTANT: Before installing, consult installation instructions packed with product for current dimensional data.

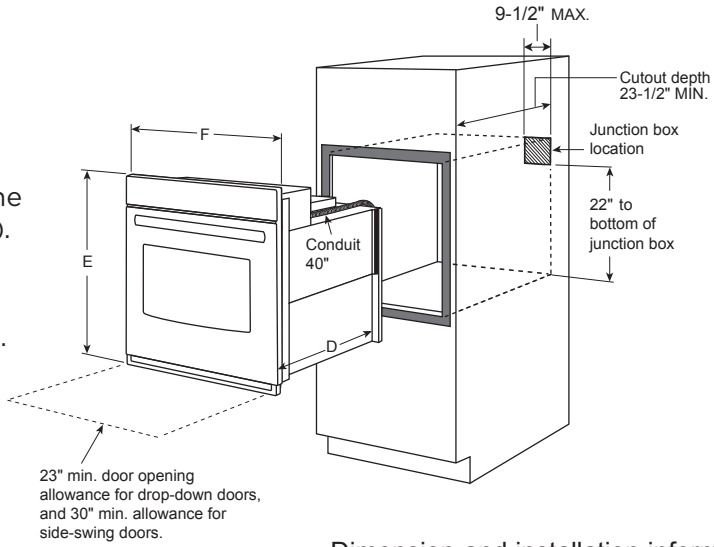

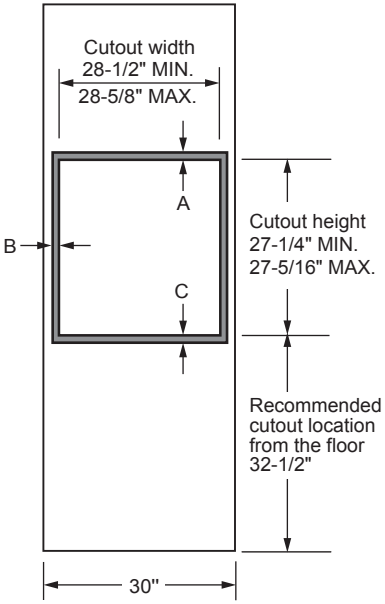

Dimension and installation information are shown in inches.

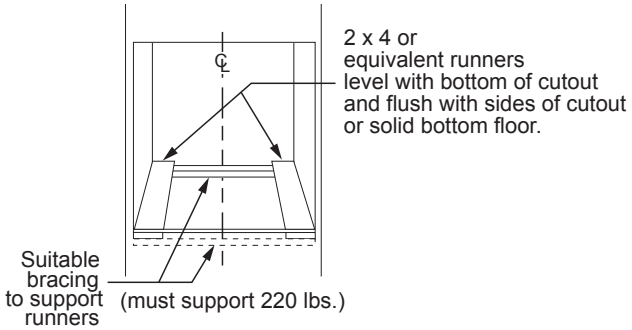

KW RATING	
240V	4.2
208V	3.2
BREAKER SIZE	
240V	20 Amps
208V	20 Amps

	JTS3000
Cabinet	30"
A - Overlap of oven at top of cutout	1"
B - Overlap of oven other side of edge of cutout	3/4"
C - Overlap of oven at bottom of cutout	1-1/4"
Oven	
D - Install depth	23-1/2"
E - Overall height with trim	28-5/8"
F - Overall width	29-3/4"

GE APPLIANCES

For answers to your GE Profile™ or GE Appliances product questions, visit our website at geappliances.com or call GE Answer Center® Service, 800.626.2000.

GE APPLIANCES FIT GUARANTEE

ADA COMPLIANT

Listed by Underwriters Laboratories

Specification Revised 10/26

JTS3000DN/EN/SN

GE® 30″ Smart Built-In Self-Clean Single Wall Oven with Never Scrub Racks

DIMENSIONS AND INSTALLATION INFORMATION (IN INCHES)

NOTE: 30″ Single electric wall ovens are approved for installation below a countertop, and below certain gas and electric cooktops. Refer to the Approved Combinations Matrix available at geappliances.com for specific information.

NOTE: 30″ Single electric wall ovens are approved for installation above 27″ and 30″ warming drawers.

ATTENTION INSTALLER: Electric wall ovens are NOT approved for installation with a plug and receptacle. They must be hard wired into an approved junction box.

IMPORTANT: Before installing, consult installation instructions packed with ALL products for current dimensional and combination data.

UNDERCOUNTER INSTALLATION

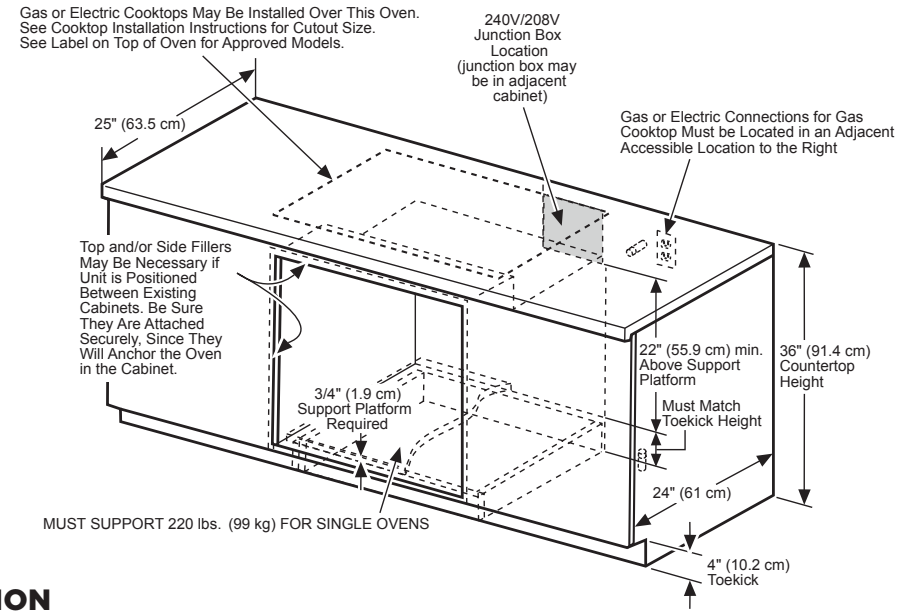

SIDE-BY-SIDE INSTALLATION (TWO OVENS IN SEPARATE CUTOUTS)

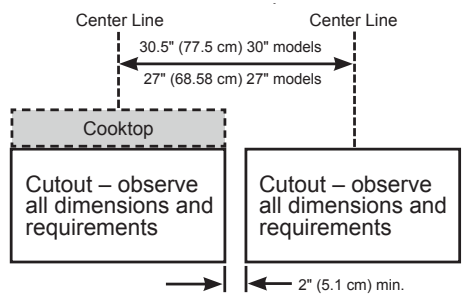

NOTE: One cooktop may be centered over either oven in the side-by-side installation.

INSTALLATION BELOW A COOKTOP

IMPORTANT: Maintain a minimum distance of 31 1/4" from the top surface of the countertop to the wall oven platform to ensure that the cooktop and wall oven do not interfere with each other (see picture).

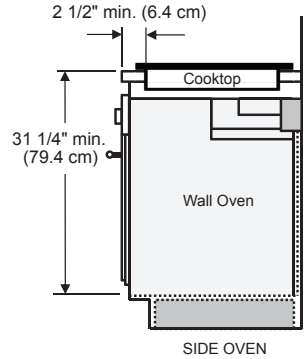

GE APPLIANCES

For answers to your GE Profile™ or GE Appliances product questions, visit our website at geappliances.com or call GE Answer Center® Service, 800.626.2000.

Specification Revised 10/26

JTS3000DN/EN/SN

GE® 30″ Smart Built-In Self-Clean Single Wall Oven with Never Scrub Racks

FEATURES AND BENEFITS

Heavy-duty racks

Easy-clean controls

Self-clean with optional Steam Clean

Anywhere control with remote notifications

Scan-to-cook

10-pass hidden bake element

8-pass broil element

Fit Guarantee

Model JTS3000DNBB – Black

Model JTS3000DNWW – White

Model JTS3000SNSS – Stainless steel

Model JTS3000ENES – Slate

FIT GUARANTEE

Replacing a similar wall oven from GE Appliances or another brand? GE wall ovens are guaranteed for an exact fit or GE Appliances will pay up to $300 toward modifications.

Visit geappliances.com for more info.

GE APPLIANCES