Maxstow®

medicine cabinet, 30" x 24"

K-81146

Features

- Innovative staggered shelf layout fits tall and short items
- Deep shelves hold large containers
- Low-profile design hugs the wall for a clean look
- Mirror-front door with reflective mirrored interior
- Three fixed shelves—one full width and two partial
- Two-way adjustable hinges with 108° opening capability for easy cabinet access

Material

- Rustproof aluminum

Installation

- Easy surface-mount installation—no wall cutting
- Reversible: install as left- or right-hinge swing
- Includes mounting hardware
- Includes reversible side panel kit (white / grey) to match your decor

Recommended Products/Accessories

K-23723 Faucet cleaner

Codes/Standards

None Applicable

KOHLER® One-Year Limited Warranty

See website for detailed warranty information.

Available Colors/Finishes

Color tiles intended for reference only.

Color	Code	Description
	DA1	Dark Anodized Aluminum

Maxstow®

medicine cabinet, 30" x 24"

K-81146

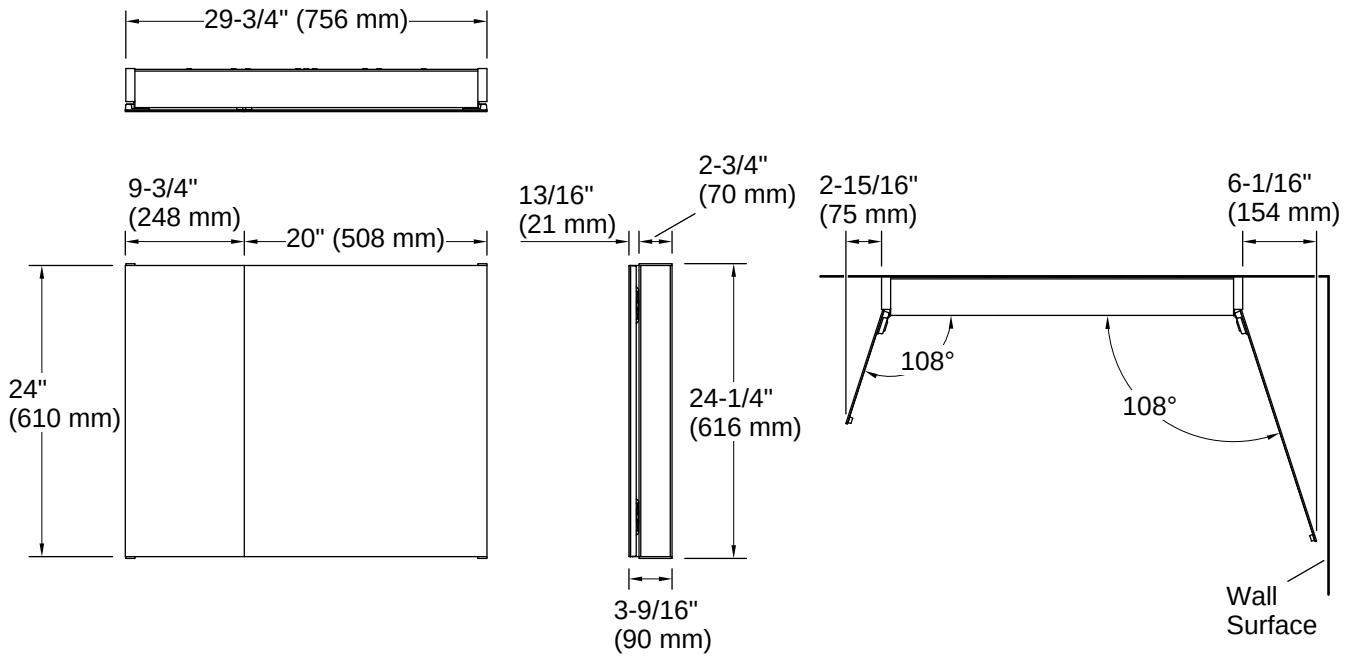

Technical Information

All product dimensions are nominal.

Wood type:	Medium-density fiberboard
Mirror type:	Wall-mount

Notes

Install this product according to the installation instructions.

When determining the height of the cabinet, ensure the mirrored door will clear all obstacles (such as a faucet). A minimum distance of 3" (76 mm) is required.

This cabinet is designed for either right or left door swing. Check for obstructions.

For surface-mount, use anchors (not provided) rated for the loaded weight of this product.

THE BOLD LOOK OF KOHLER