Important :

Before you begin Installation please read the following instructions, observe all local plumbing and building codes.

- Check area where tub will be installed to ensure that it is leveled and structurally sound.
- Please unwrap the tub and check it carefully for any damage that may have occurred during transportation.
- Check that all parts are included.
- If you have any missing parts, damage is found or have any questions regarding the installation process contact customer service at (877)-252-7277.
- Store bathtub in a safe place until you begin installation to avoid damage to the tub's surface.
- No claims for damages or blemishes will be accepted once the tub has been installed.
- We recommend that the installation of this tub be done by a qualified licensed professional.
- Because of its weight and volume we recommend that the installation of this tub be done with the help of at least one other person, a fall even what may seem like a minor one may result in cracking of the tub, moving straps and rubber gripped gloves are recommended.
- These Installation instructions do not include details of waste connections, the final details should be determined by your contractor

KINGSTON

AQUA EDEN

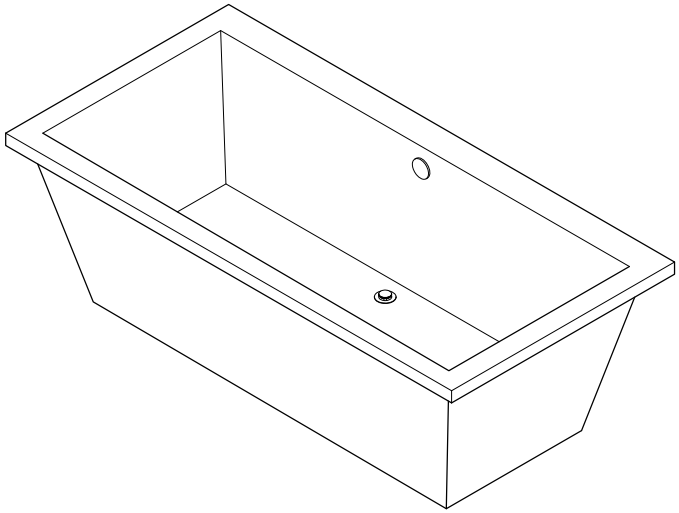

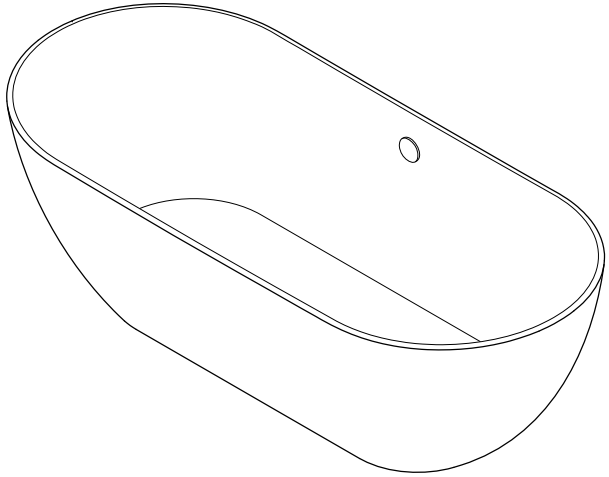

www.kingstonbrass.com

TOLL-FREE CUSTOMER SERVICE: 1-877-2-KBRASS
TECHNICAL SUPPORT E-mail: service@kingstonbrass.com
12775 Reservoir Street, Chino, CA 91710

NOTICE

Failure to follow all directions may cause leaks which may result in water damage



KINGSTON

AQUA EDEN

Acrylic Tub with or without Drain
Installation Instructions

Caution :

This bathtub is heavy. Get help lifting and moving this tub. Read all instructions thoroughly before starting the installation.

Important Points to Remember :

1. Provide adequate floor support.
2. Make sure the subfloor is level. Provide drain access from below. Provide access to all plumbing connections. Observe local building and plumbing codes.

Tools Required

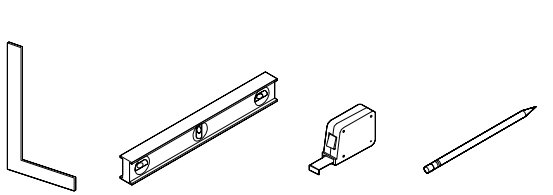

Conventional Woodworking Tools & Materials

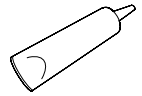

Silicone Sealant



Teflon Tape

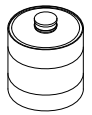

Glue/ Epoxy

1

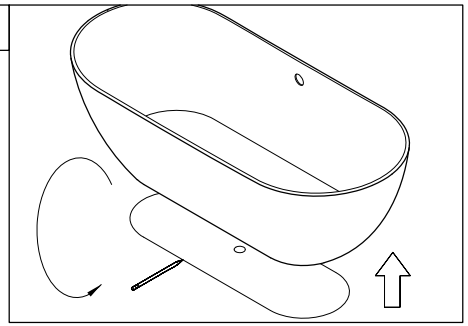

1. Position the tub at the desired location, with a pencil mark the perimeter of the tub, also mark the location of where the tub drain will be situated, remove tub and place upside down on a blanket or piece of cardboard.

2

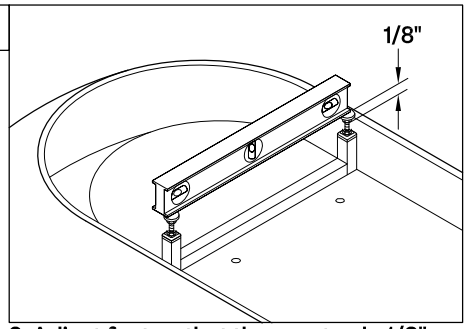

2. Adjust feet so that they protrude 1/8" below the level of the tub, you can accomplish this by placing a level or a straight piece of lumber across the width of the tub.

3

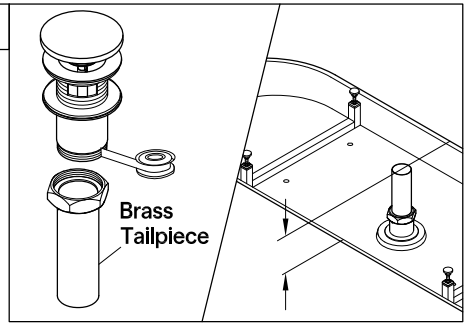

3. If you have access to the tub drain from below the floor, apply Teflon tape to the drain and thread the included tailpiece. Measure how far it protrudes from the bottom of the tub, then rough in your drain pipe accordingly.

4

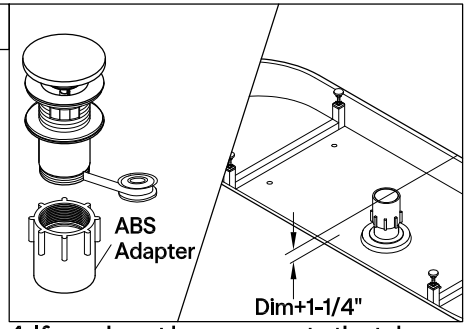

4. If you do not have access to the tub from below the floor, your tub includes an ABS adapter for a 1-1/2" drain, apply Teflon tape to the threading on the drain and install the tub drain adapter, tighten by hand until secure, measure the distance between the bottom of the drain adapter and the floor, add 1-1/4" that should give you the height of the drain pipe, you can measure the distance to the floor by placing a piece of lumber across the bottom of the tub and using that as your guide to determine the floor level.

5

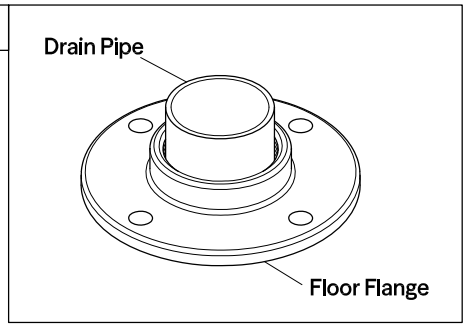

5. Secure floor flange to the area around the drain, this will serve as additional reinforcement to keep your tub drain in place in the event of any accidental impact on the tub.

6

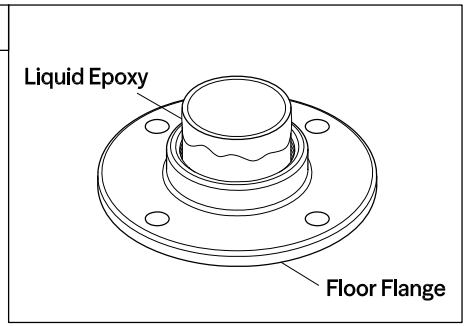

6. Apply liquid epoxy or a professional grade ABS glue or JB weld epoxy to the drain pipe coming from the floor, apply as per manufacturer's instructions.

7

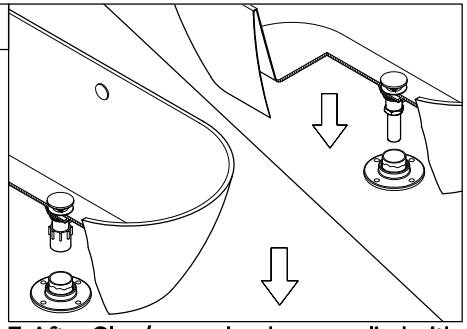

7. After Glue/ epoxy has been applied with the help of two or more people slowly pick up the tub and align the tub drain adapter to the drainage pipe, set tub in place.
If you installed the tailpiece to your drain, with the help of two or more people slowly pick up the tub and align the tailpiece to the drainage pipe, set tub in place, from below secure tailpiece to your drain pipe.

8

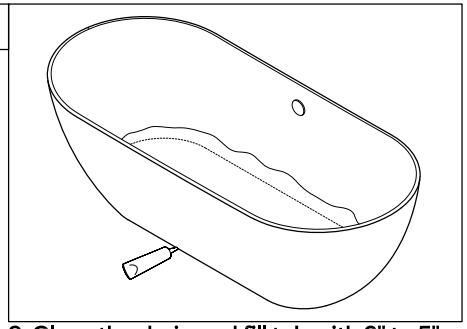

8. Close the drain and fill tub with 2" to 5" with water, while inspecting the connections from below the floor drain the tub and check for leaks. Apply caulking around the perimeter as needed, clean excess caulking.

Cleaning

Clean with a damp cloth only.
Avoid using metal or abrasive polishes.

©2025 LVC Kingston LLC. All Rights Reserved.
2026-05-T

Parts:

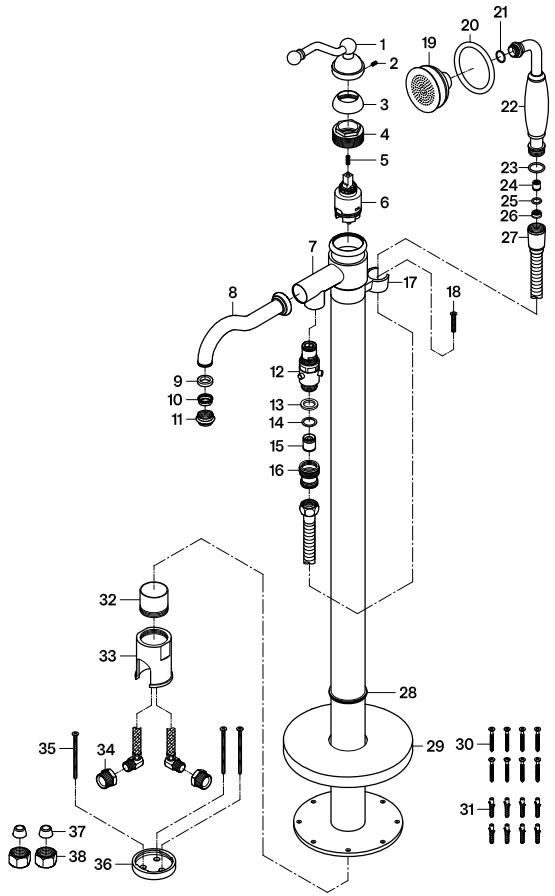

Replacement Parts:

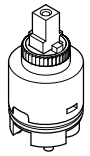

Cartridge: KSRP1811C

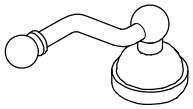

Handle: KSH7031ABL

CARE AND MAINTENANCE OF YOUR FAUCET

Your KINGSTON faucet has been finished to the most strict standards; however, due to the high content of minerals in the water, your finish may appear dull and tarnished after time. These are some do's and don'ts to maintain the luster on your faucet for many years to come.

DO
1. Use a silicon based caulking when installing.
2. Clean your faucet with only a mild soap and water solution.
3. Dry your faucet after using it.
4. Give it a coat of Carnauba Wax periodically.

DON'T
1. Use plumbers putty when installing the faucet.
2. Use any abrasive cleaning agents.

It may seem like a very simple and short list but it is that simple to maintain your faucet, looking shiny and new.

If your faucet is already looking somewhat dull and tarnished, before replacing it, try cleaning it with a 50/50 solution of vinegar and water, you may need to soak some rags and wrap around those stubborn areas, leave
overnight and rinse completely in the morning, apply Carnauba wax once you have removed the mineral deposits.

KINGSTON

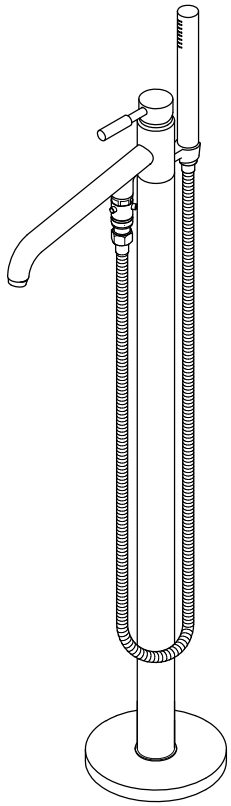

Parts:

Screw	Cone Washer & Coupling Nut	Base Plate & Sleeve & Sleeve Extension	Adapter	Screw & Anchor
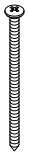	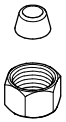	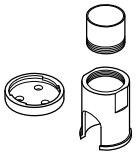		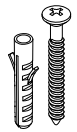
3 Pcs	2 Pcs	1 Set	2 Pcs	8 Pcs

NOTICE

Failure to follow all directions may cause leaks which may result in water damage

www.kingstonbrass.com

TOLL-FREE CUSTOMER SERVICE: 1-877-2-KBRASS
TECHNICAL SUPPORT E-mail: service@kingstonbrass.com
12775 Reservoir Street, Chino, CA 91710

KINGSTON

INSTALLATION INSTRUCTIONS
Floor Mount Tub Filler with Hand Shower

BEFORE BEGINNING INSTALLATION:

1. For Best Results, All work should be done by a licensed plumber.
2. This faucet should be located away from traffic areas; impact either by foot traffic or floor cleaning equipment may damage the faucet, and potentially cause a leak which may result in water damage.
3. Please read installation instructions thoroughly, make sure that you have all the required tools and supplies needed to complete this installation.
4. Due to the application and design of this faucet, extensive consideration should be given to its installation.
5. Flush all supply lines prior to installation.
6. Shut off both supply lines after flushing.

1

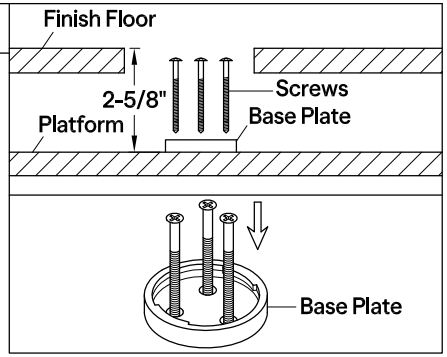

1. Prepare location by securing a platform 2-5/8" below the finish surface of the floor, (special care should be taken when calculating the depth of the platform), in some cases you may need to build a platform above ground if building on concrete slab, secure base plate to platform using the 3 (included) screws.

2

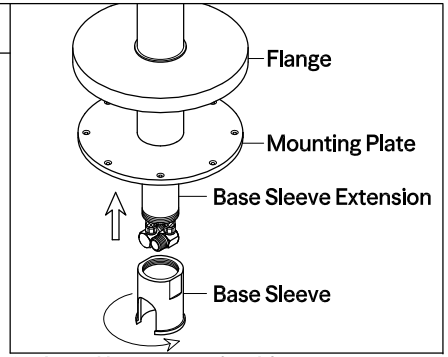

2. Thread base plate, feed faucet supply lines through base sleeve extension (brass) and insert into body of faucet, thread base sleeve(chrome) to Sleeve extension, secure faucet assembly by inserting into base plate and twisting in a clockwise direction until it is locked into place, make sure the faucet supply lines are protruding from base sleeve prior to securing to base plate.

3

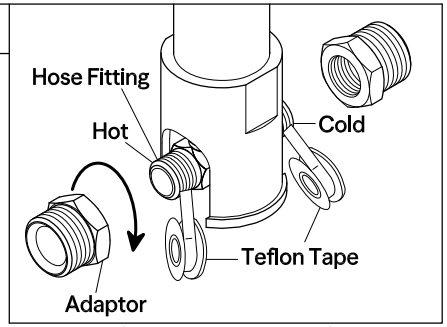

3. Apply Teflon tape to the hose fitting threads, and thread the adapters to the inlet hose fittings, do not over-tightening as this may result in structural damage and cause leaking.

4

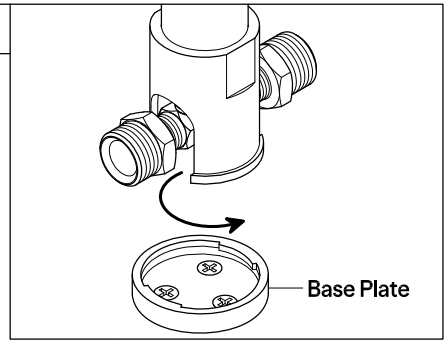

4. Secure faucet assembly by inserting into base plate and twisting in a clockwise direction until it is locked into place.

Warning!!!

- Do not over-tighten nut during installation.
- Over-tighten may crack the valve and cause severe leak.

Need Tools:

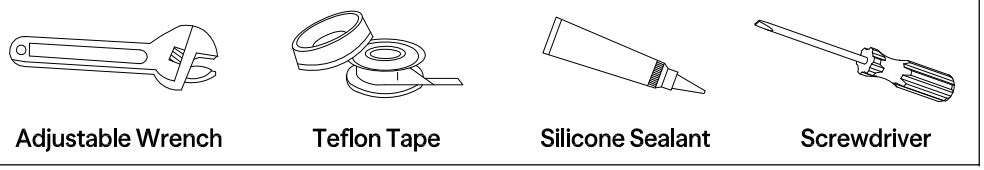

5

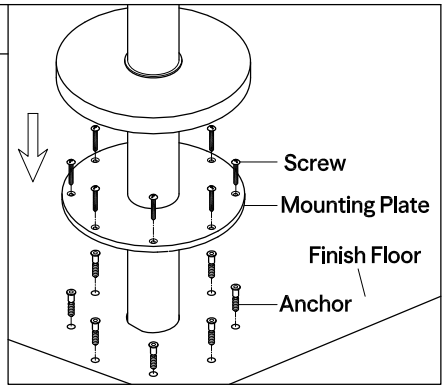

5. Using the proper anchors secure faucet to the floor by threading all 8 screws on the base plate, on wood floors it may be necessary to reinforce the floor underneath by adding a 2" x 4" piece of lumber to provide sufficient thickness for the screws to support the faucet adequately.

6

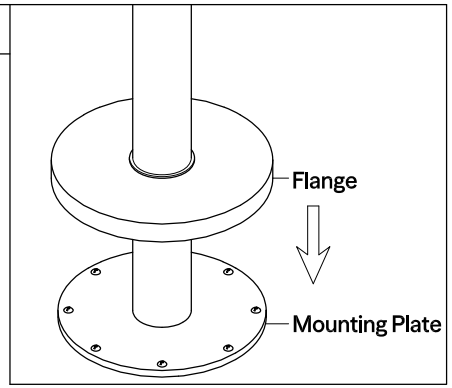

6. Slide flange down to cover base plate. Depending on field conditions, in some cases it may be easier to connect the supply lines prior to securing the faucet.

7

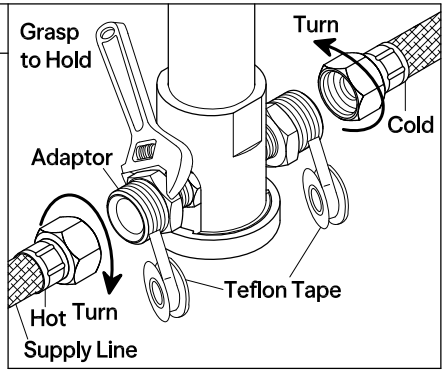

7. Apply Teflon tape to the adapter threads, while holding the adaptor securely with a wrench, thread supply lines, do not allow adapter to turn as this may cause structural damage and result in leaking.

8

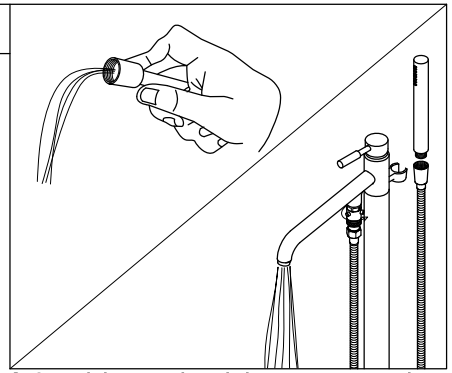

8. Attach hose to hand shower outlet and turn on faucet, let water flow out of spout for at least 1 minute alternating between hot and cold water, turn diverter to hand shower by turning knob located under the spout and let water run for 1 minute, replace aerator and attach hand shower to hose.

Warning!!!

- Please do not lean on, step on or use this faucet as support to come in or out of the tub.
- This faucet should be located away from traffic areas; impact both by foot traffic or floor cleaning equipment, may damage the faucet and potentially cause a leak which, may result in water damage.

©2025 LVC Kingston LLC. All Rights Reserved.
2025-05-D