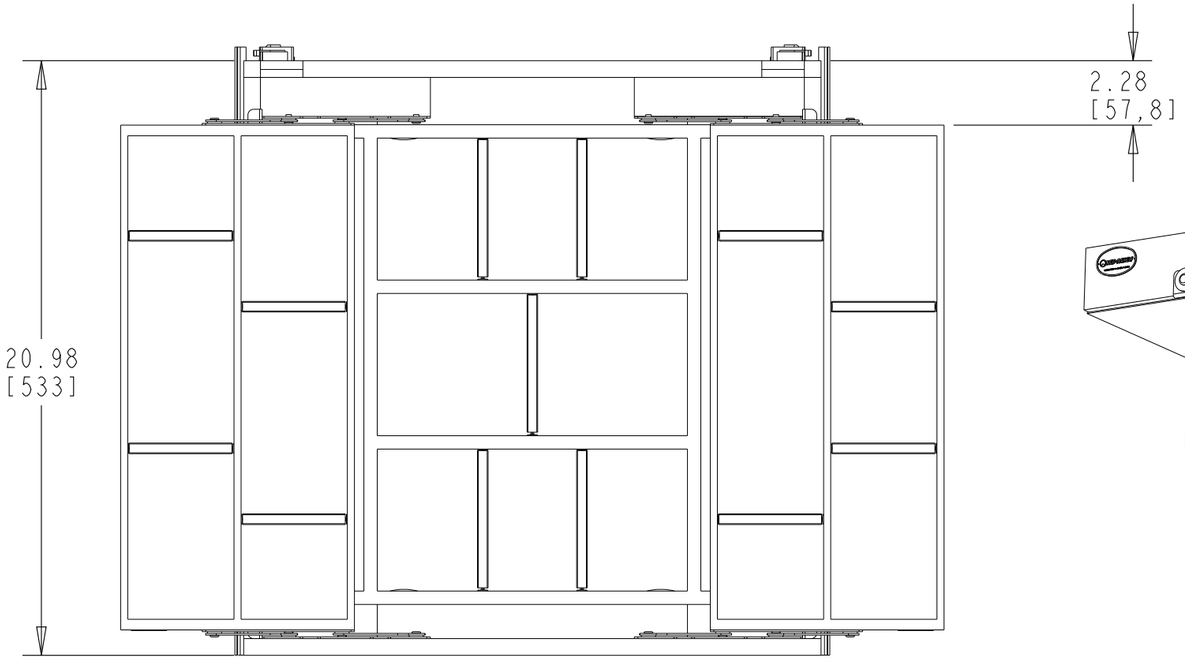

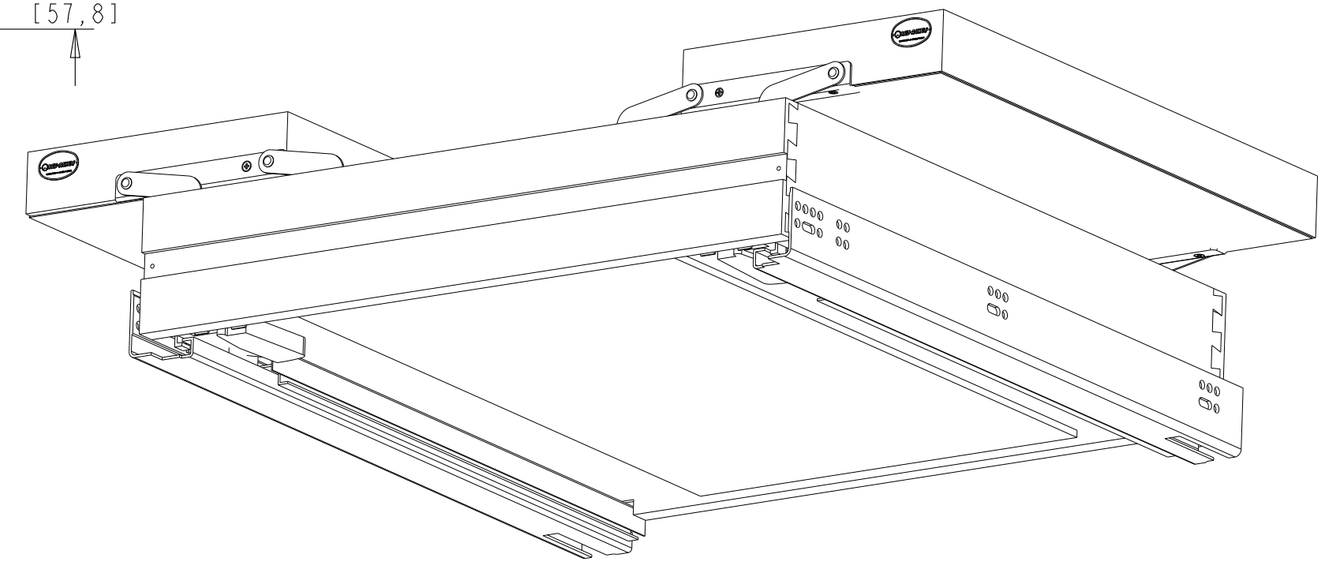

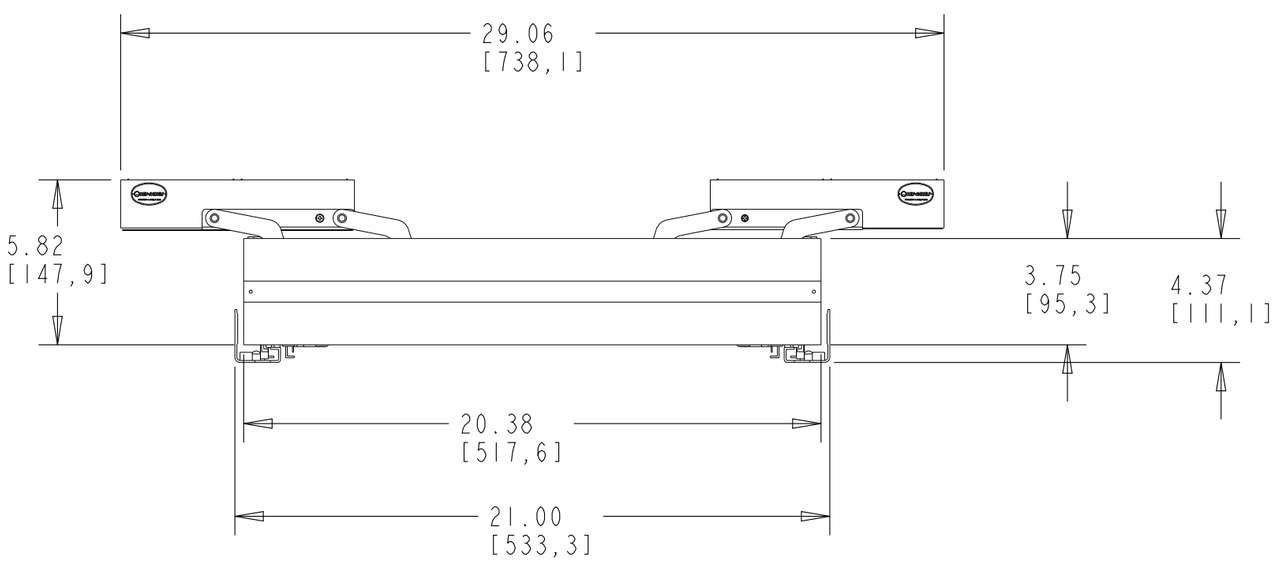

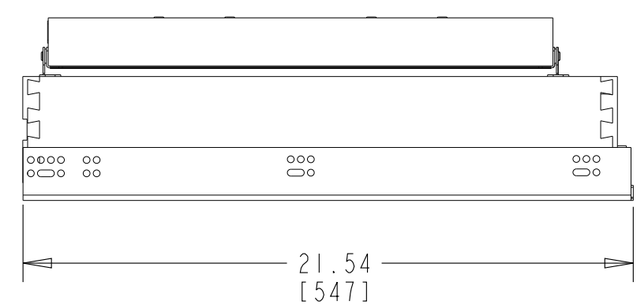

CUSTOMER DRAWING

REV.	DATE	BY	DESCRIPTION OF CHANGE

INCH [MM] — AMERICAN PROJECTION

	BY	DATE
DRAWN	BKT	2/11/20

TOLERANCES
MAT. DEC.
(WOOD) .XX ±.03 [.8mm]
(OTHER) .XX ±.02 [.5mm]
(ALL) .XXX ±.005 [.13 mm]
FRACTIONS ±1/32 [.8 mm]
ANGLES ±1/2°

REV-A-SHELF®, INC.

SIZE B — WOOD TIERED MAX ORGANIZER DRAWER 24" CABINET

MATERIAL

FINISH

DRAWING NO. 4WTMD-24HSC1

PART NO. 4WTMD-24HSC1

SCALE 0.125

SHEET 1 OF 2

PART DIMENSIONS		
	MIN	MAX
WIDTH	21.00	
DEPTH	21.54	
HEIGHT	4.37	
WEIGHT		
DIAMETER		
RADIUS		
CONTAINTER CAPACITY		
CONTAINER UOM		

MIN CABINET OPENING	
WIDTH	21.00
DEPTH	21.63
HEIGHT	4.50

PRODUCT MAX WEIGHT RATING

SLIDE SPECIFICATIONS				
SLIDE TYPE	BALL BEARING	SLIDE EXTENSION	FULL EXTENSION	MAX WEIGHT RATING
SLIDE CLOSING	SOFT	SLIDE LENGTH	533 MM (21)	
SLIDE MOUNTING	UNDER MOUNT	SLIDE FINISH	ZINC	90 LB

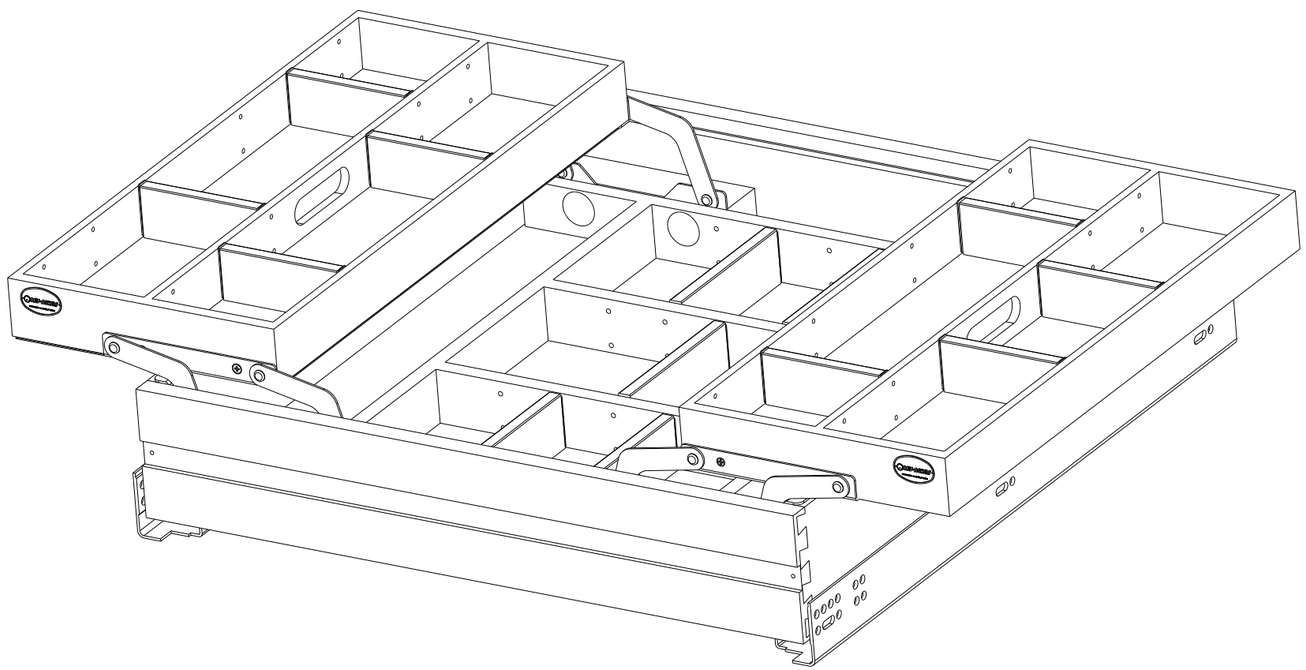

CUSTOMER DRAWING

REV.	DATE	BY	DESCRIPTION OF CHANGE

INCH [MM]

AMERICAN PROJECTION

	BY	DATE
DRAWN	BKT	2/11/20

REV-A-SHELF® INC.

SIZE B

WOOD TIERED MAX ORGANIZER DRAWER 24" CABINET

TOLERANCES

MAT. DEC.
(WOOD) .XX ±.03 [.8mm]
(OTHER) .XX ±.02 [.5mm]
(ALL) .XXX ±.005 [.13 mm]
FRACTIONS ±1/32 [.8 mm]

ANGLES ±1/2°

MATERIAL

FINISH

DRAWING NO. 4WTMD-24HSC1

SCALE 0.125

PART NO. 4WTMD-24HSC1

SHEET 2 OF 2