

3. Attach the undermount mounting plates. Position bowl so that reveal is equidistant. Then on underside of countertop, drill holes for the inserts of the mounting plates.
   Use a drill bit with stop block to avoid drilling through the top. Use 3~2 mounting plates on the long sides of the sink, and 2~1 mounting plates on the short sides of the sink, or follow the locations on the template that comes with the sink. Drill the holes 1" back from the cutout edge.

NOTE:
The mounting plate is 3/4" wide and 2-3/4" in length. The mounting plate may be too long for some installations. If this is the case, make a brace out of wood or solid surfacing, butt it up against the sink, and screw it into the cabinet wall on site. Measure the thickness of the brace and the cabinet wall so the screw does not go through to the other side of the cabinet. Instructions continued on back panel.

4. Install the sink. Clean the bottom of the countertop and the top flange (or lip) of the sink with denatured alcohol. Then apply a bead of silicone adhesive sealant to the top edge of the bowl flange and position the bowl in the countertop.

5. Tighten the mounting plates. Tap in the inserts (anchors) for mounting plates into the pre-drilled holes with the slotted ends first. Thread a bolt into a anchor, with washer and slotted clips in place, tighten the bolt to anchor the mounting plate into the countertop material.
   Repeat for each mounting plate. Tighten the bolts with screwdriver to secure the sink bowl.

NOTE:
Do not fully tighten one mounting plate at a time. Partially tighten a mounting plate, then partially tighten the mounting plate across from it. After each mounting plate is partially tightened, repeat the process, fully tightening each mounting plate. This ensures a secure installation and avoids damage to the sink.

NOTE FOR MARBLE OR GRANITE:

- Use lead anchors which are glued in, rather than the mounting plates.
- Remove excess sealant from the inside lip of the bowl using appropriate cleaner on a clean rag.

©2025 LVC Kingston LLC. All Rights Reserved.
2025-05-D

KINGSTON

GOURMETIER

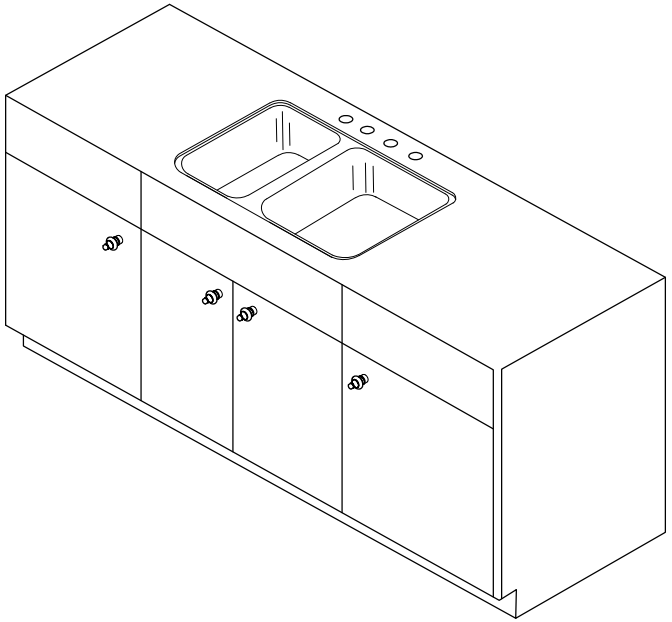

www.kingstonbrass.com

TOLL-FREE CUSTOMER SERVICE: 1-877-2-KBRASS
TECHNICAL SUPPORT E-mail: service@kingstonbrass.com
12775 Reservoir Street, Chino, CA 91710

NOTICE

Failure to follow all directions may cause leaks which may result in water damage



⚠WARNING

Lifting hazard.

Single person lift could cause injury.
Use assistance when moving or lifting.

KINGSTON

GOURMETIER

Undermount Sink
Installation Instructions

These instructions are for installing KINGSTON Undermount stainless steel sinks. Undermount sinks are sinks that are mounted from below the countertop.
If you are installing another type of sink, such as a drop-In sink which is installed on top of the counter, please refer to instructions specifically for those sinks.
KINGSTON undermount sinks can be installed with three different reveals-positive, zero, or negative - each creating a distinctive look where the countertop and sink meet (see diagram). Deciding on your preferred look must be done prior to installation.

Positive Reveal - The countertop edge sits approximately 1/8" back from the edge of the sink, exposing the sink rim.
All KINGSTON undermount sinks feature a 1" finished rim. All KINGSTON undermount sinks feature an approximate 1/8" positive reveal.

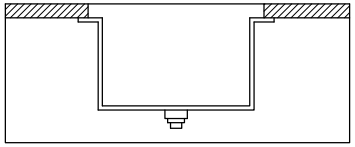

Zero Reveal - The countertop meets the edge of the sink, fitting flush with the sink bowls.

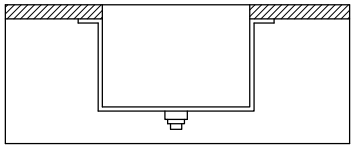

Negative Reveal - The countertop extends over the edge of the sink on all sides by approximately 1/8". Use caution with this installation to be sure that accessories such as colanders or cutting boards will fit properly.
Templates are supplied only as a guide.
The physical use of the sink will ensure a more accurate cutout.

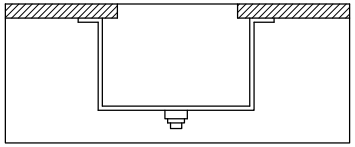

The instructions that follow are for installing a KINGSTON undermount stainless steel sink in a solid surface countertop only. Minimum thickness of the actual countertop material is one half-inch. In addition, a one-inch build up around the sink is preferred. KINGSTON recommends that undermount sinks and routering of your solid surface material should be Installed by a professional installer for best results.

Note:
- It is recommended that all sink installations be performed by a qualified professional.
- Inspect sink prior to installation.
- Follow all plumbing and building codes.
- The warranty will be voided if all instructions are not followed.

Installation:
If Countertop needs to be cut, mark sink cut-out by placing sink upside down, check under the counter to make sure that the sink bowl will fit into the sink without interference of the cabinet.

Installation Step:

1. Create a template. Using a framing square, draw a line from front to back on the bottom of the countertop, indicating the location of the center of the sink. Draw a line parallel to the front edge of the countertop, indicating how far back the sink should be located.
   Typically the setback is 2" to 2-1/2" from the front of the counter, depending on the countertop overhang,the type of sink bowl and the size of the sink deck. To create a template, turn the sink upside down on the piece of plywood and draw around it. Or place template transfer paper or cardboard template on plywood.

NOTE:
- Paper and cardboard templates are supplied only as a guide.
- Using the actual sink ensures a more accurate cutout.
- Mark the centerpoint of the sink on the template.

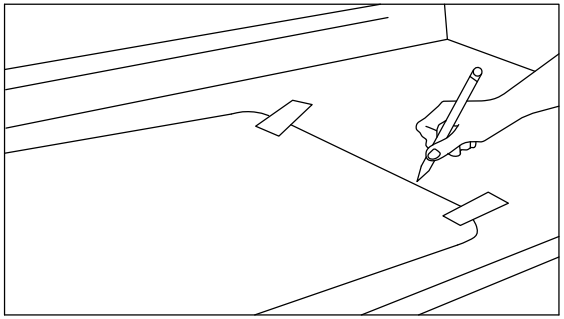

2. Make the sink cutout. Find the center of the sink template and align it with the center mark drawn on the countertop. Place the template with the front edge along the front edge line drawn on the countertop. Secure the plywood template to the countertop using 6" bar clamps. Place the router over the plywood template and cut around it, making sure the router follows the edge of the template. This creates the sink cutout.
   Finish the inside of the sink cutout according to the recommendations of the countertop material supplier.

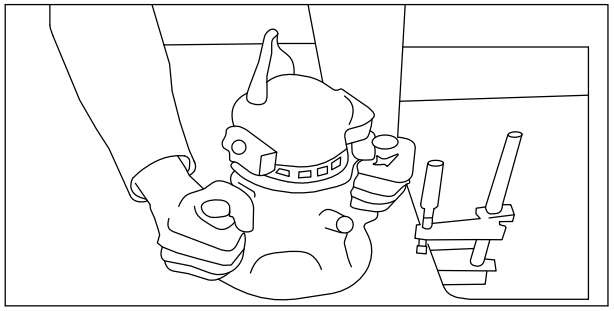

KINGSTON

Undermount Clip for Stainless Steel Sink

Installation Instructions

Installation Step:

1. Drill evenly spaced 7/16" holes to insert anchors, generally 2~1 on the short side and 3~2 on each long side.
2. Insert anchor.
3. Add a bead of silicone-based caulking around the perimeter of the sink and place sink at the desired location.
4. Place plates with the curved end towards the sink.
5. Thread bolts until the sink is firmly secure.
6. Clean any excess caulking.

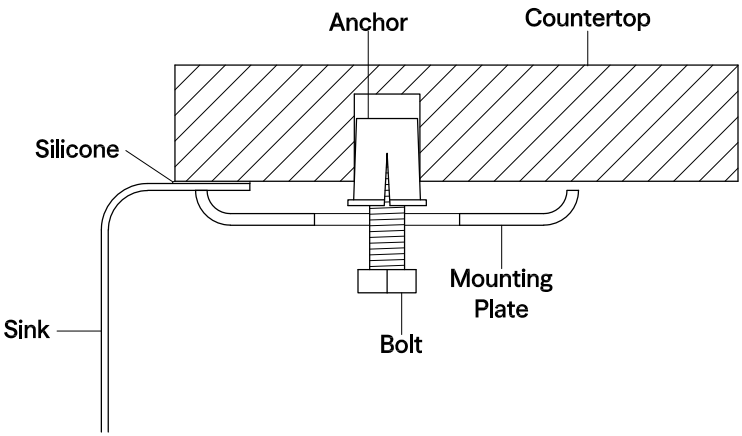

www.kingstonbrass.com

TOLL-FREE CUSTOMER SERVICE: 1-877-2-KBRASS
TECHNICAL SUPPORT E-mail: service@kingstonbrass.com
12775 Reservoir Street, Chino, CA 91710

©2025 LVC Kingston LLC. All Rights Reserved.
2025-05-T