NOTES:

1 OPEN DOOR VIEW INCLUDES HINGE SPACE OFFSET.

PRODUCT	W1	L1	G1	DRAWER SIZE	DOOR SIZE
			ROUNDED TO THE NEAREST 1/32		
B33	33"	15 1/2"	(3/16")	15 13/32" X 5 23/32"	15 13/32" X 21 11/32"
B36	36"	17"	(3/16")	16 29/32" X 5 23/32"	16 29/32" X 21 11/32"
B39	39"	17 19/32"	(2")	17 17/32" X 5 23/32"	17 17/32" X 21 11/32"
B42	42"	19 3/32"	(2")	19 1/32" X 5 23/32"	19 1/32" X 21 11/32"

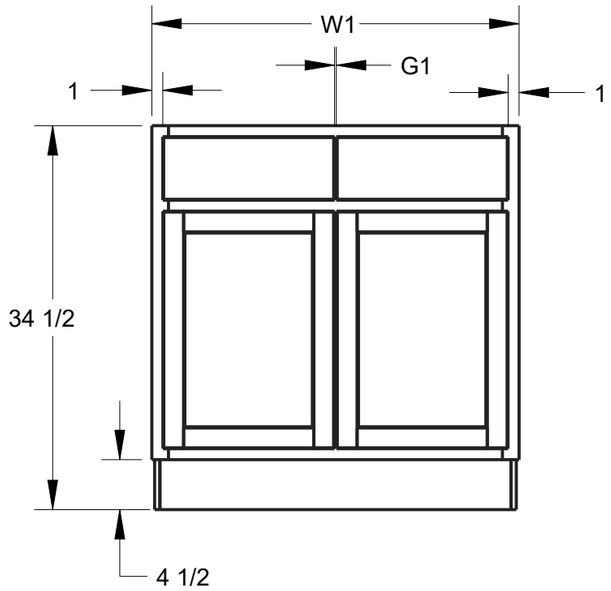

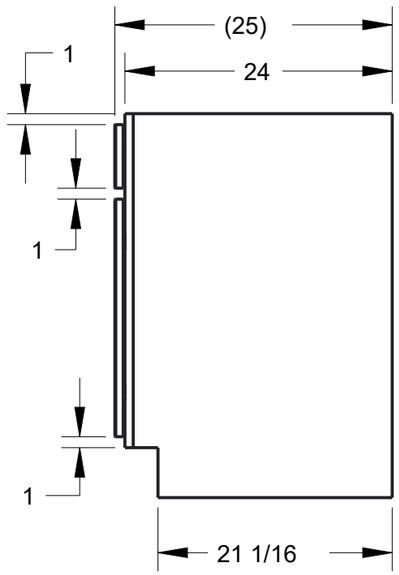

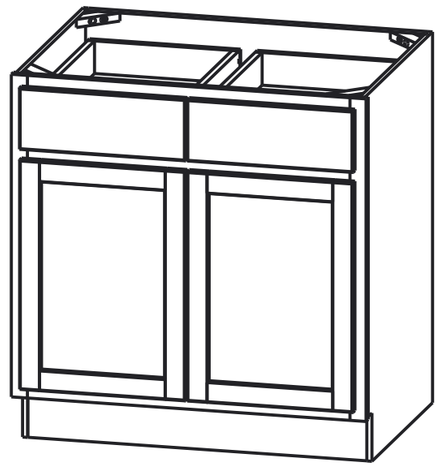

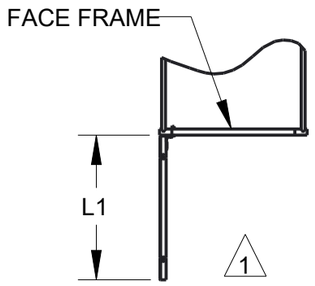

OPEN DOOR

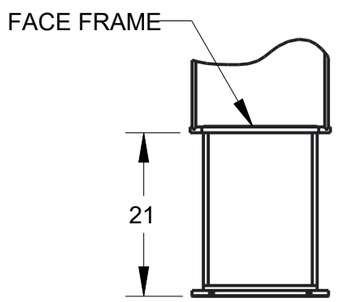

DRAWER OPEN

PRODUCT SHOWN B33

DOCUMENT STATUS: **Released**

THIRD ANGLE PROJECTION		hardware resources		
MATERIAL: N/A	FINISH: N/A	DESCRIPTION: B33, B36, B39, B42 HALF OVERLAY		
DRAWN BY: ANDY BROWN	DATE: 22FEB2021			
DESIGNED BY: NORTHPOINT	DATE:	DRAWING NUMBER: B33-B36-B39-B42_FULL_OVERLAY		REV: A
APPROVED BY: JOEL GOMEZ	DATE: 15MAR2021	SIZE: A3	SCALE: 0.071	SHEET: 1 / 1

HARDWARE RESOURCES RESERVES THE RIGHT TO CHANGE SPECIFICATIONS WITHOUT NOTICE.
IN CASE OF A DISCREPENCY, ACTUAL PART GEOMETRY SUPERSEDES THIS DOCUMENT.

THE INFORMATION CONTAINED WITHIN THIS DRAWING IS THE SOLE PROPERTY OF HARDWARE RESOURCES INC. ANY REPRODUCTION IN PART OR WHOLE WITHOUT WRITTEN PERMISSION OF HARDWARE RESOURCES INC. IS PROHIBITED.