KINGSTON

TO ORDER PARTS, CALL: 1-877-252-7277
www.kingstonbrass.com

KS7211,5,8DPL
Single Handle Vessel Sink Faucet

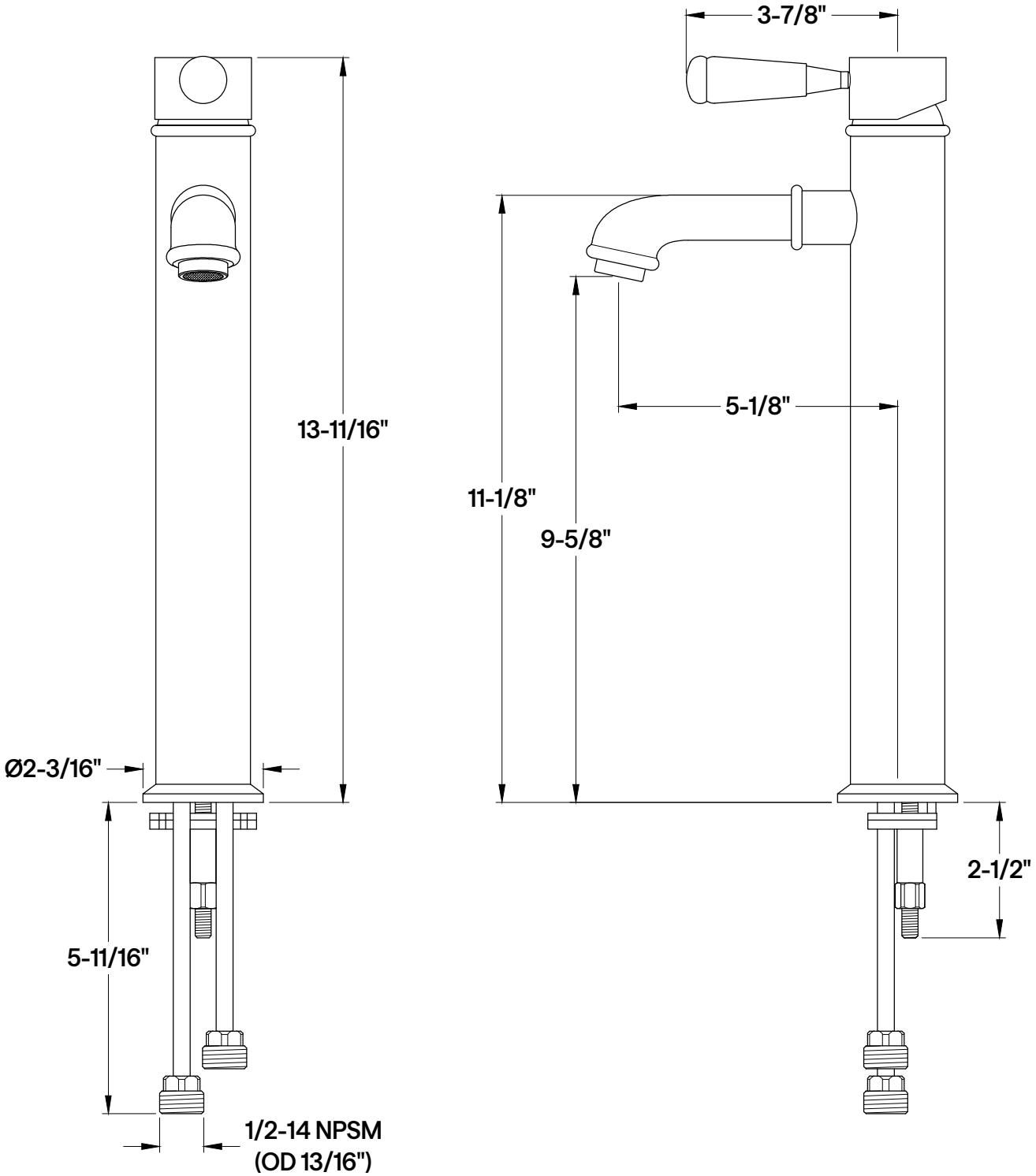

2025-10-B