KINGSTON

Brass Pop-Up
Installation Instructions

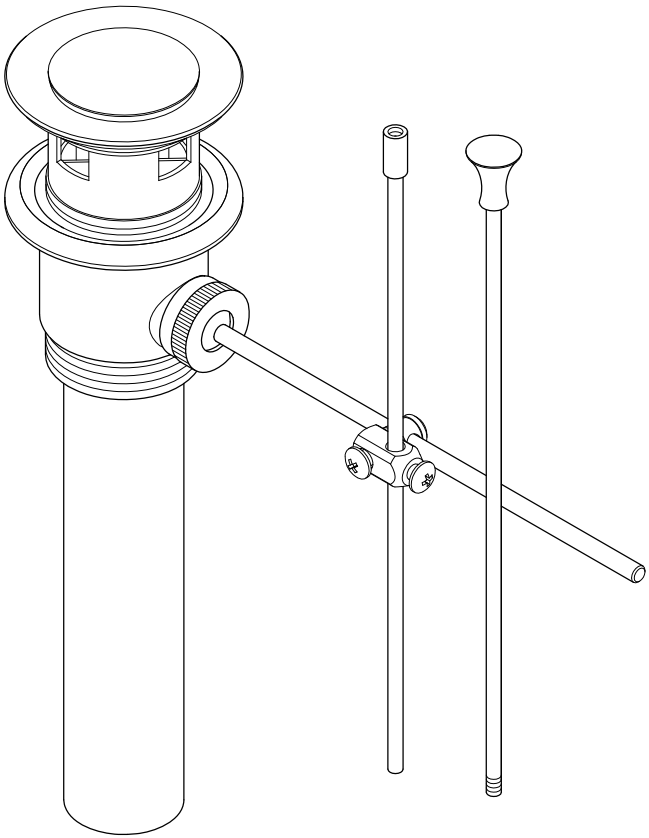

NOTICE

Failure to follow all directions may cause leaks which may result in water damage

www.kingstonbrass.com

TOLL-FREE CUSTOMER SERVICE: 1-877-2-KBRASS
TECHNICAL SUPPORT E-mail: service@kingstonbrass.com
12775 Reservoir Street, Chino, CA 91710

Tools Required

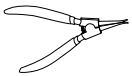
External Plier

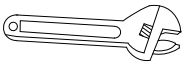
Adjustable Wrench


Teflon Tape

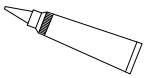
Silicone Sealant

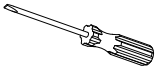
Screwdriver

Installation Steps:

1. Remove the flange (14), rubber washer (13), plug (15) and gasket washer (12) from drain body (11).
2. Insert the flange (14) with rubber washer (13) down into the sink's drain opening. Make sure the taper surface of rubber washer (13) is facing down.
3. Put the gasket washer (12) onto the threads of the flange (14) from the underside of sink. Move up the gasket washer (12) until it fully touches the bottom surface of sink. Make sure the arc surface of rubber is facing up.
4. Install drain body (11) onto the flange (14) by thread engagement. Slowly turning the drain body (11) to tighten up. Make sure the side hole of drain body (11) positioned toward the rear wall after tightening up. To adjust the direction, you may need to use a plier with external tips that can go inside the four overflow slots on the flange (14) to help adjust and tighten.
5. Remove tailpiece (10) from drain body (11). Apply Teflon tape on the threaded end of tailpiece (10), then thread -connect it onto drain body (11) again.
6. Insert the plug (15) into the flange (14).
7. Remove the nut (8), plastic bushings (9) and joint (5) from the ball rod (7).
8. Place one plastic bushing (9) in the side hole of drain body (11) with its concave surface face out. Insert the short side of ball rod (7) into the side hole of drain body (11). Put the other plastic bushing (9) and nut (8) on the long side of ball rod. Make sure the concave surface of plastic bushing (9) is facing to the ball of ball rod (7). Tighten up the nut (8) by hand.
9. Move the ball rod (7) up and down to test the plug (15) can open and close smoothly. To adjust the opening gap of plug (15), you can loosen and adjust the nut (15-1) and the flat head screw (15-2)
10. Connect pop-up rod (1) with extension rod (2). Connect extension rod (2) with ball rod (7) by the joint (5) and adjust properly connection position. Tighten up two screws (4) and (6) on the joint (5) with a screw driver to fix the connection firmly.

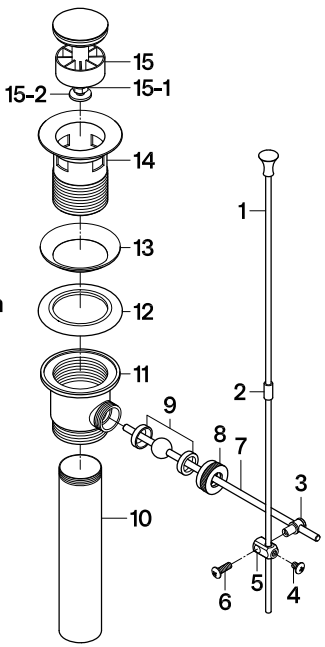

11. Pull up the pop-up rod (1) to the closed position of the plug (15), then turn on the faucets to fully fill the sink with water. Examine and ensure that no water is leaking from the drain body.
12. Push down the pop-up rod (1) to the open position of plug to drain water. Examine to make sure no water leakage around the gasket washer (12). If leakage found, re-assemble drain body (11), the flange (14) and make sure the gasket washer (12) correctly covers up the top of drain body (11).

©2025 LVC Kingston LLC. All Rights Reserved.
2025-07-G