SIMPLIHOME®

Bedford / Freemont / Hampton

Low Storage Media Cabinet

Model # AXCBED-03FG

brooklyn + max™

Wyndenhall™ Home Decor

SIMPLIHOME®

Great quality is a right.

Thank you for shopping with Simpli Home,
America's top brand for high-value furniture.

100%
Plastic Neutral Products

It's time to register your product warranty.

It's quick and easy. And you'll be happy you did.

- ✓ Activate your **1-year** warranty
- ✓ Automatic entry to win a **$500** gift certificate
- ✓ Earn instant rewards and **save**

simpli-home.com/product-registration

SIMPLIHOME®

Review your product and collect rewards!

Thank you for your purchase! We hope you enjoy it. We'd love your feedback. Please share a review and get instant rewards!

simpli-home.com/product-review

Share photos and get your cash back!

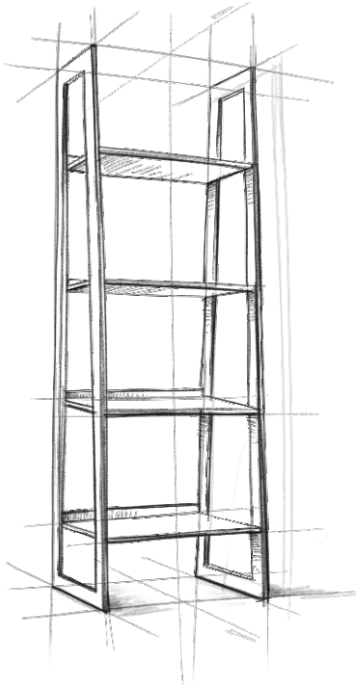

Send us images or share them on social and qualify for instant rewards. You may even receive store credit on your entire purchase!

simpli-home.com/share-images

SIMPLIHOME®

For Fastest Customer Service:

1. Open your phone's camera.
2. Point your phone's camera at the QR code to scan.
3. Click on the pop up.
4. You'll be taken to our customer service page.
5. Fill the form with your order information and issue.
6. Submit form.
7. A customer service associate will contact you.

Other ways to contact us...

Email Us

customerservice@simpli-home.com

Visit Us

Visit our site directly at
www.simpli-home.com

Call Us

1-866-518-0120
Monday to Friday
9am to 5pm EST

***If you've purchased from a retailer and you wish to return the product, please contact the retailer directly.**

IMPORTANT: Please read this manual carefully before beginning assembly of this product. Keep this manual for future reference.

Safety Information

CAUTION: Injuries and damage can occur from furniture tip over if product is not properly anchored to the wall. Use the Furniture Anti-Tipping Restraint provided with the product. Consult our assembly instructions for help.

If the Furniture Anti-Tipping Restraint kit is not in the box, please contact our customer service department in order to obtain another kit before using the furniture.

Identify all the parts and hardware. Do not discard of the packaging until you have checked that you have all of the parts and hardware required. Hardware package may have spare parts.

WARNING: This item contains small parts which can be swallowed by children and pets. Keep children and pets away during assembly. To avoid danger of suffocation, always keep plastic bags away from children and pets. We recommend that you assemble this unit on a carpeted floor to avoid scratches. If using power tools, set the tool to low torque to avoid damage.

May require 2 people for ease of assembly.

Care & Maintenance

This furniture is designed for indoor use.

Perhaps the greatest environmental damage to wood furniture comes from wide swings in relative humidity (RH) in our homes. Wood absorbs and desorbs water as relative humidity rises and falls, and in doing so it swells and shrinks. Making matters worse, it expands and contracts unequally along different grain directions. As humidity changes, the components of wooden objects are continually pushing and pulling against each other. This pressure often results in parts of furniture no longer fitting together closely or becoming distorted or breaking from their own internal stresses.

The response to relative humidity changes begins with determining the annual average RH for your particular space. Then try to keep the RH in the space where your furniture is as close to that average as possible, generally within about 10% up or down. De-humidify in the summer and humidify in the winter.

Be aware that raising the temperature lowers the humidity and vice versa. Thus, modern heating systems, which can drive down interior RH in the winter, almost invariably cause problems for furniture. To counteract their effect, you can either modify the RH by keeping furniture containing spaces cooler in the winter or most importantly, have a good working humidifier for your home. A humidistat automatically works to balance the humidity in your home so it is constant. Dry indoor air can suck enough moisture from its surroundings to do permanent damage to wood, causing it to crack or split.

Remember, that not all woods are created equal. Two factors that help determine how rapidly a wood will lose moisture are pore size and surface hardness. A piece made from a dense and hard wood will dry less rapidly than pieces made from softer woods.

Furniture that is sealed and lacquered will lose moisture more slowly than an unfinished piece while pieces with veneer finishes are not only stronger but lose moisture more slowly than other finishes.

To help protect your wood furniture, take these steps:

- Use a humidifier, preferably one with an automatic control system that can sense the humidity level and adjust itself accordingly
- Don't over-humidify; that can damage wood by causing it to expand and contract
- Keep furniture out of direct sunlight, which can cause it to dry out, crack and warp
- If you can avoid it, don't put furniture near heating vents; if you can’t, keep the item 3 to 4 inches away from the wall, giving the heat and air space to circulate
- Dust with soft dry cloth
- Do not use liquid or aerosol products
- To avoid marking, do not place rubber on surface (foot pads, etc.)
- For soil build-up, wipe with damp cloth & dry
- Do not use abrasive cleaners

Part Description

A

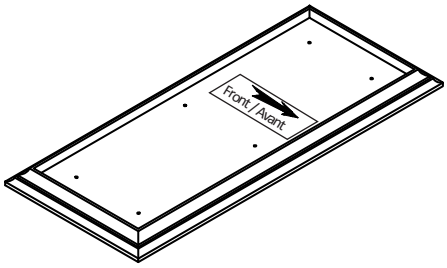

TOP
QTY 1

BL

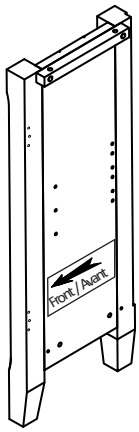

LEFT SIDE
QTY 1

BR

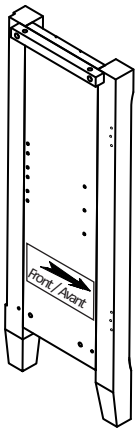

RIGHT SIDE
QTY 1

C

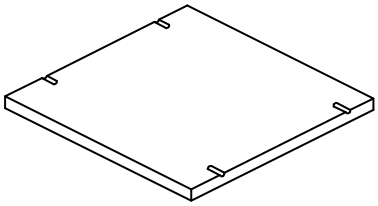

CABINET SHELF
QTY 2

D

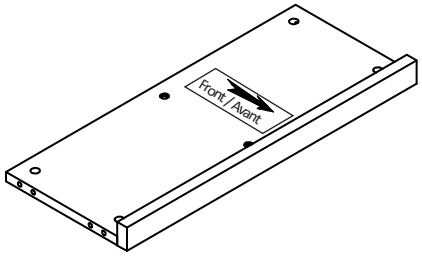

BOTTOM SHELF
QTY 1

E

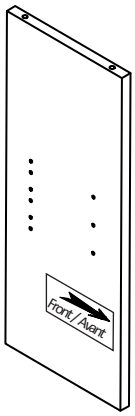

CENTRE SUPPORT
QTY 1

F

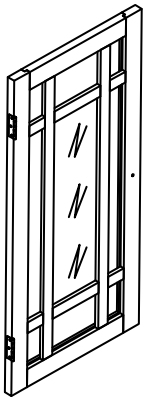

DOOR (L&R Same)
QTY 2

GL

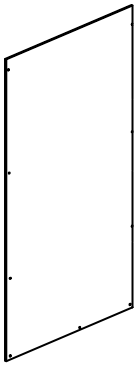

LEFT BACK PANEL
QTY 1

GR

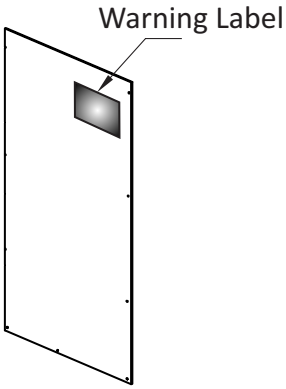

RIGHT BACK PANEL
QTY 1

Hardware Description

1

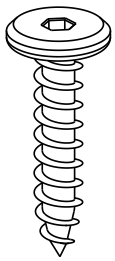

ALLEN KEY SCREW
M6 X 30 mm
QTY 6

2

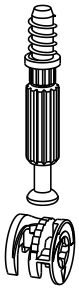

CAM LOCK PIN
CAM LOCK
QTY 6 SETS

3

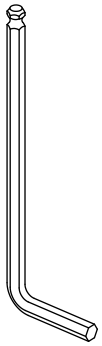

ALLEN KEY
QTY 1

4

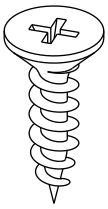

PHILLIPS SCREW
M3 X 12 mm
QTY 12

5

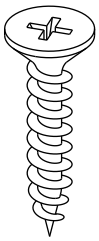

PHILLIPS SCREW
M3 X 15 mm
QTY 8

6

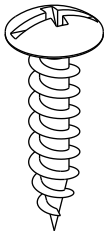

PHILLIPS SCREW ROUND HEAD
M4 X 15 mm
QTY 15

7

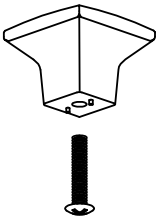

HANDLE
M4 X 25 mm
QTY 2 SETS

8

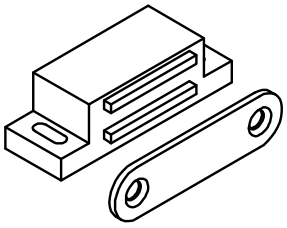

MAGNET AND PLATE
QTY 2 SETS

9

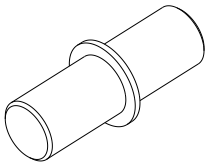

SHELF SUPPORT
QTY 12

10

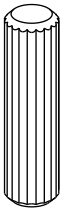

WOOD DOWEL
Ø8 X 30 mm
QTY 4

11

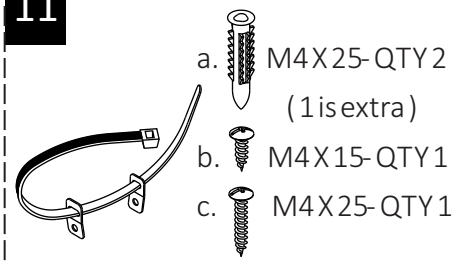

FURNITURE TIP OVER RESTRAINT
QTY 1 SET

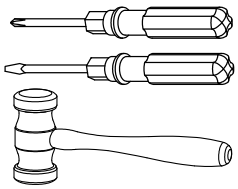

Required-
Flathead screwdriver
Phillips screwdriver
Rubber mallet
Not Included

Components - Key Diagram Model # AXCBED-03FG

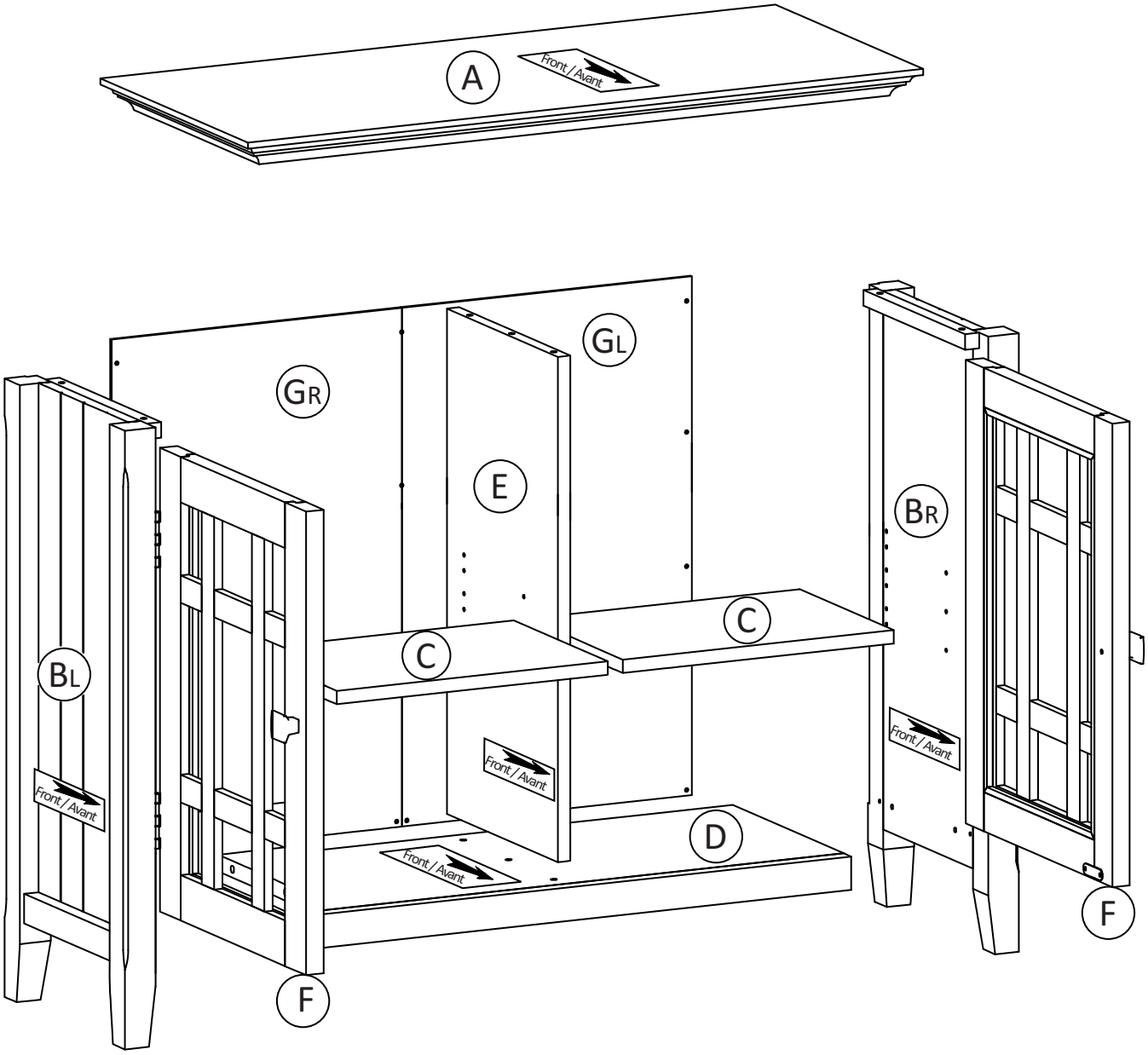

Step 1

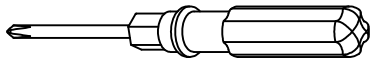

NOTE: The screwdriver is not included in the hardware pack.

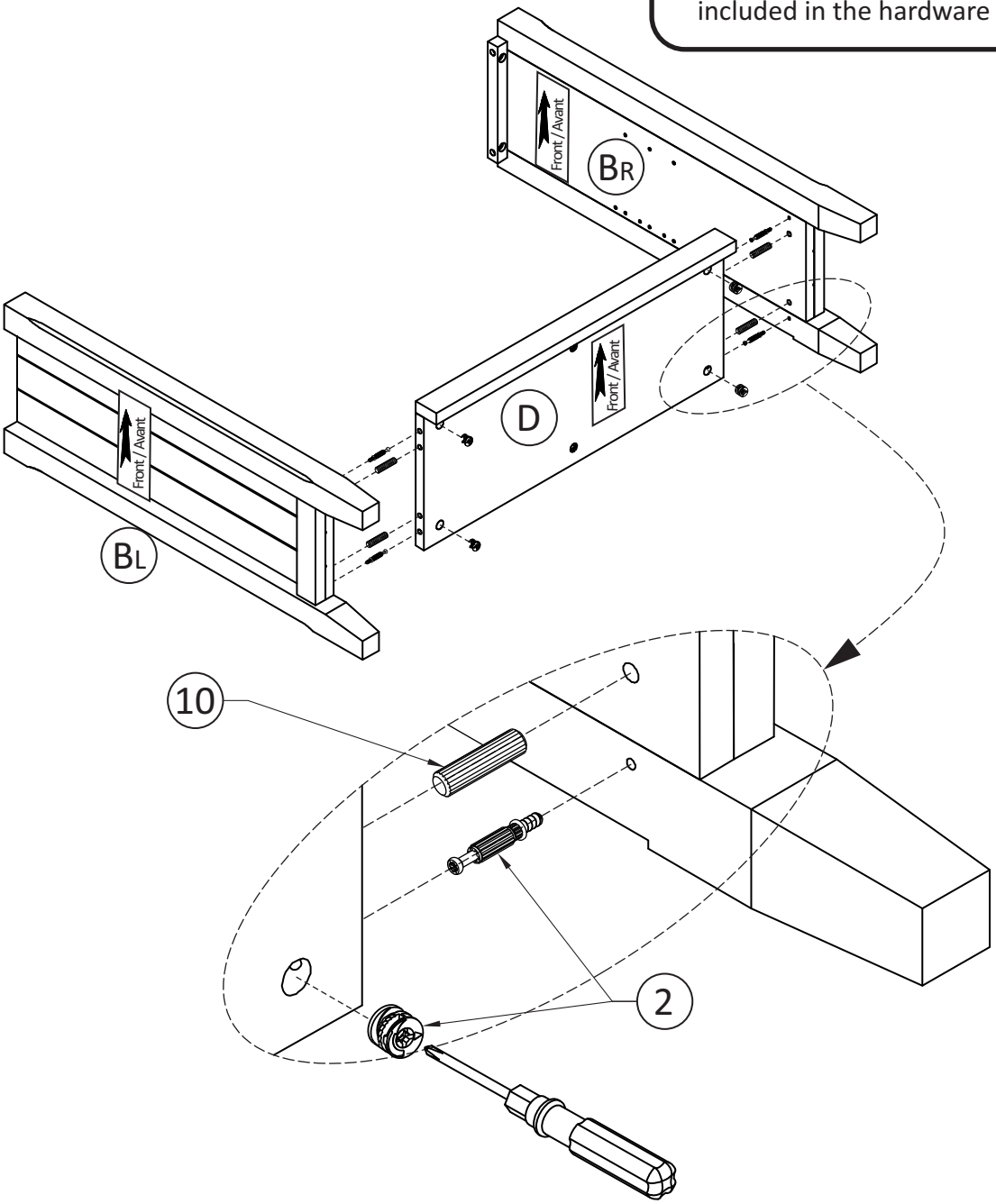

1. Insert 4 Dowels ⑩ into guide holes on Bottom Shelf Ⓓ.
2. Use rubber mallet to tap Dowels ⑩ into bottom of holes securely. 1/2 length of Dowels should be exposed.
3. Attach Cam Lock Pins ② into pre-drilled holes on the Sides BL, BR.
4. Align and insert Cam Lock Pins ② into guide holes on Bottom Shelf Ⓓ.
5. Insert Cam Locks ② into guide holes on Bottom Shelf Ⓓ.
6. Once in place tighten Cam Locks ② using a Phillips screwdriver.

Step 2

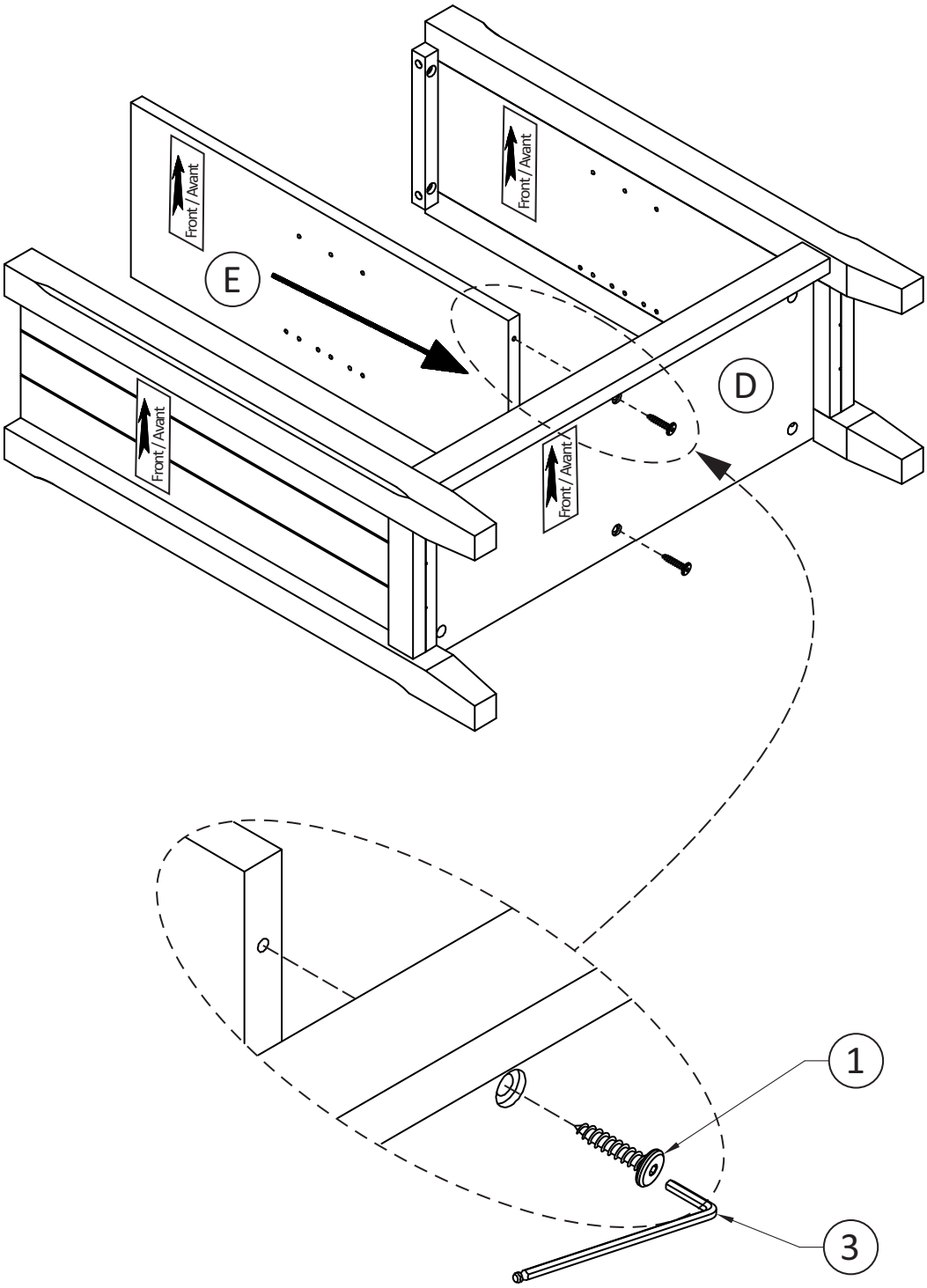

1. Attach Centre Support Ⓔ to Bottom Shelf Ⓓ using Allen Key Screws ① through guide holes.
2. Use Allen Key ③ to tighten. Do not over-tighten.

Step 3

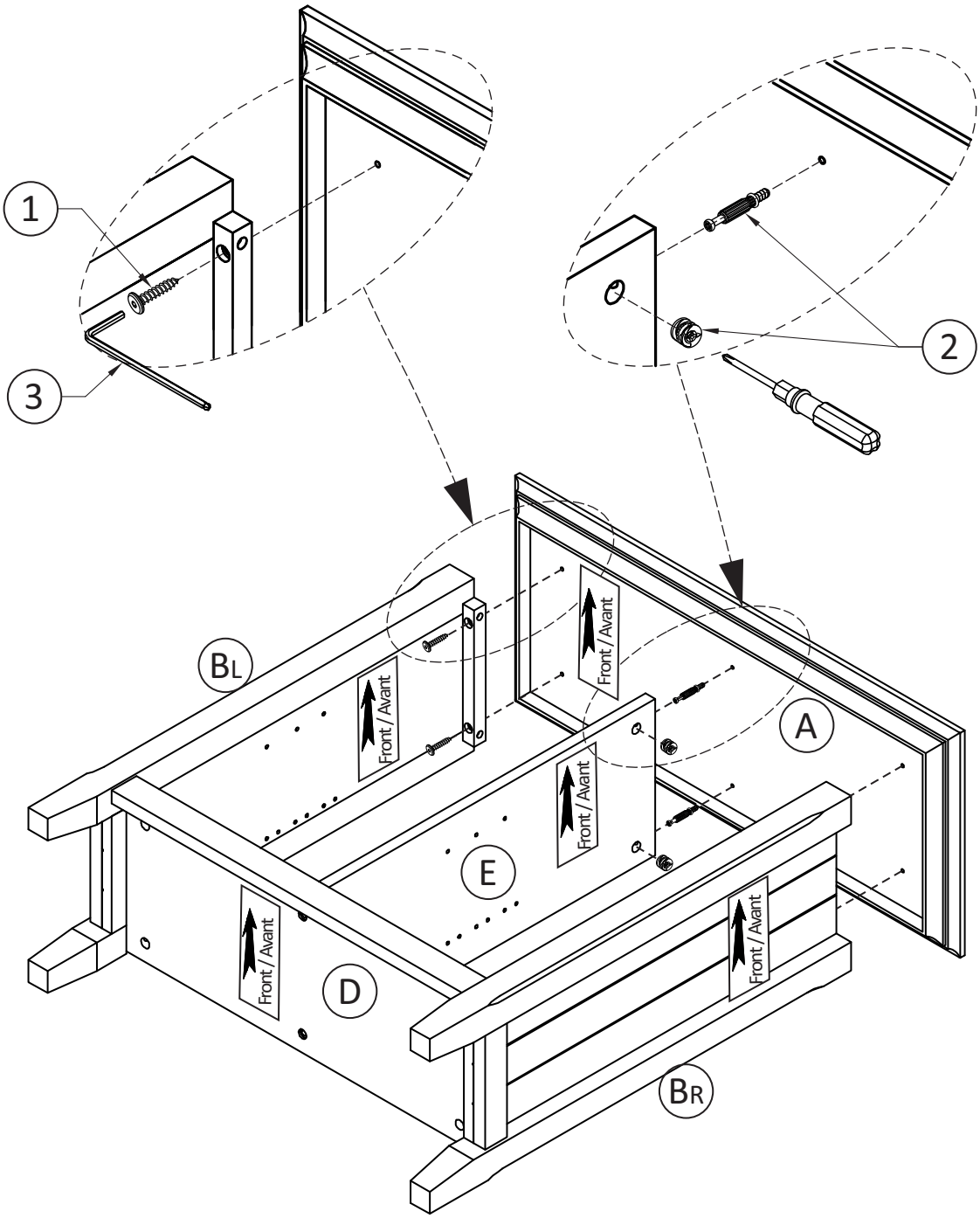

1. Attach Cam Lock Pins ② into pre-drilled at the bottom of Top Ⓐ.
2. Align pre-drilled holes on bottom of Top Ⓐ with guide holes on Sides (BL), (BR) and align and insert Cam Lock Pins ② into guide holes in Centre Support Ⓔ.
3. Attach Top Ⓐ with Sides (BL), (BR) using Allen Key Screws ① use Allen Key ③ to tighten Screws. Do not over-tighten.
4. Attach Top Ⓐ with Centre Support Ⓔ using Cam Locks ② .

Step 4

NOTE:
The triangle ruler is not included in the hardware pack.

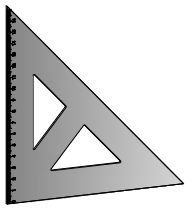

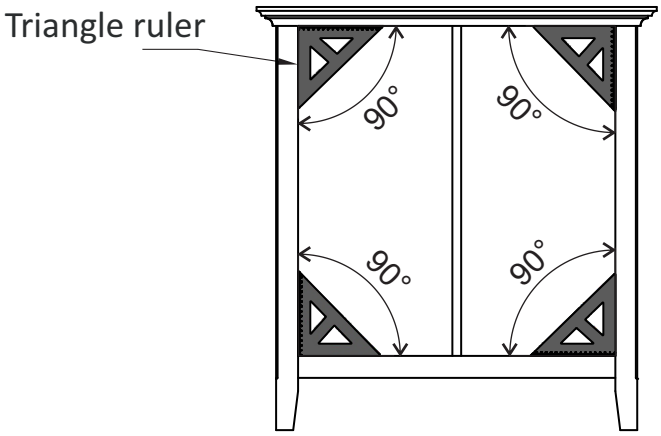

Adjust the cabinet frame before assembling the back panels.

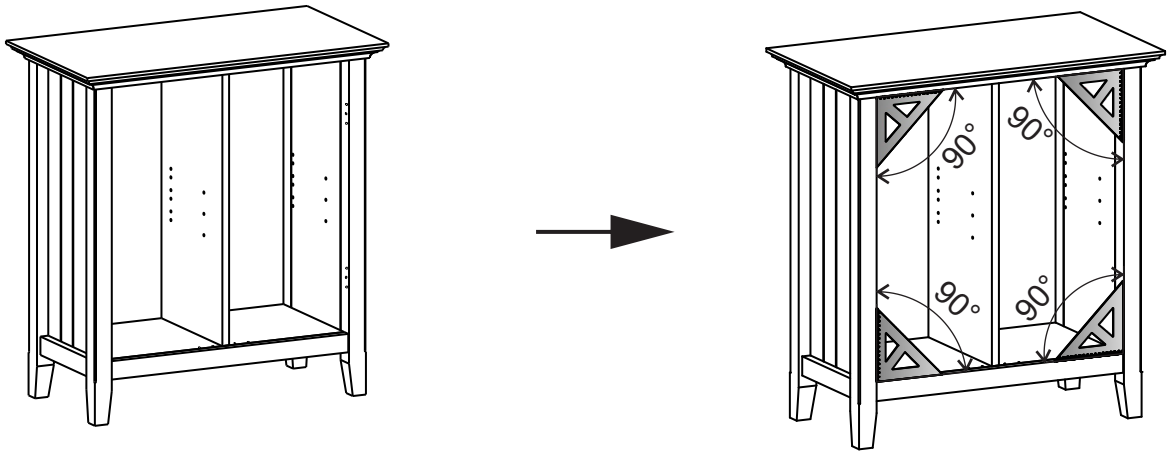

Step 5

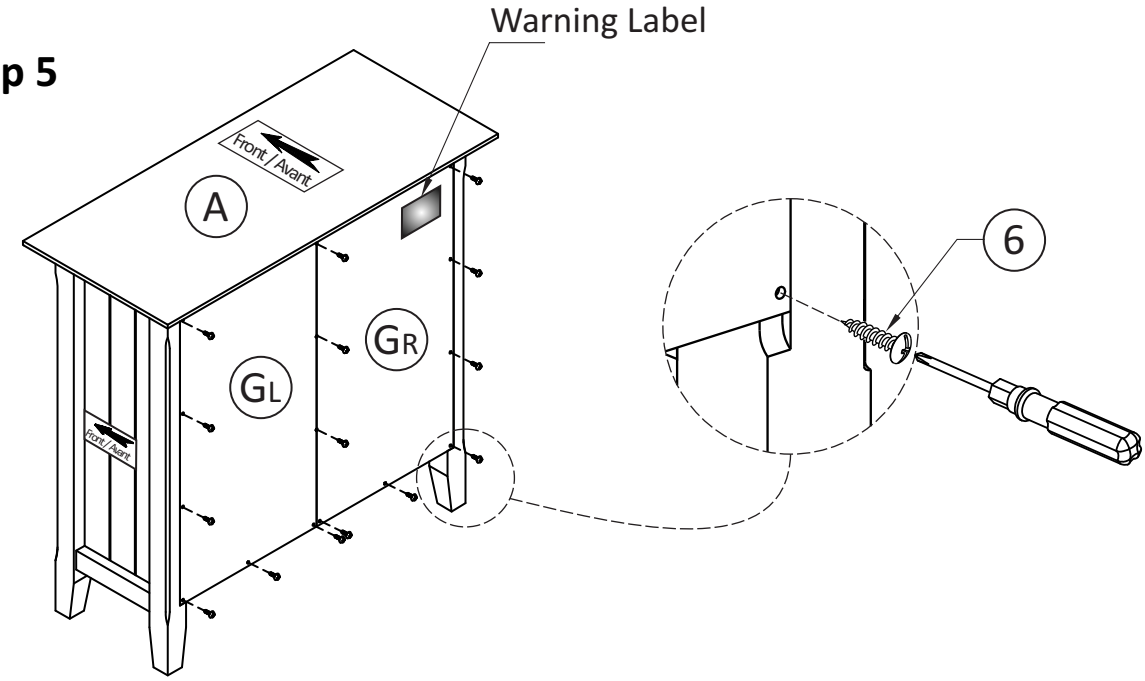

1. Attach Back Panels (GL), (GR) to back of cabinet using Phillips Screws Round Head (6) through guide holes
2. Use Phillips Screwdriver to tighten screws. Do not over-tighten.

Step 6

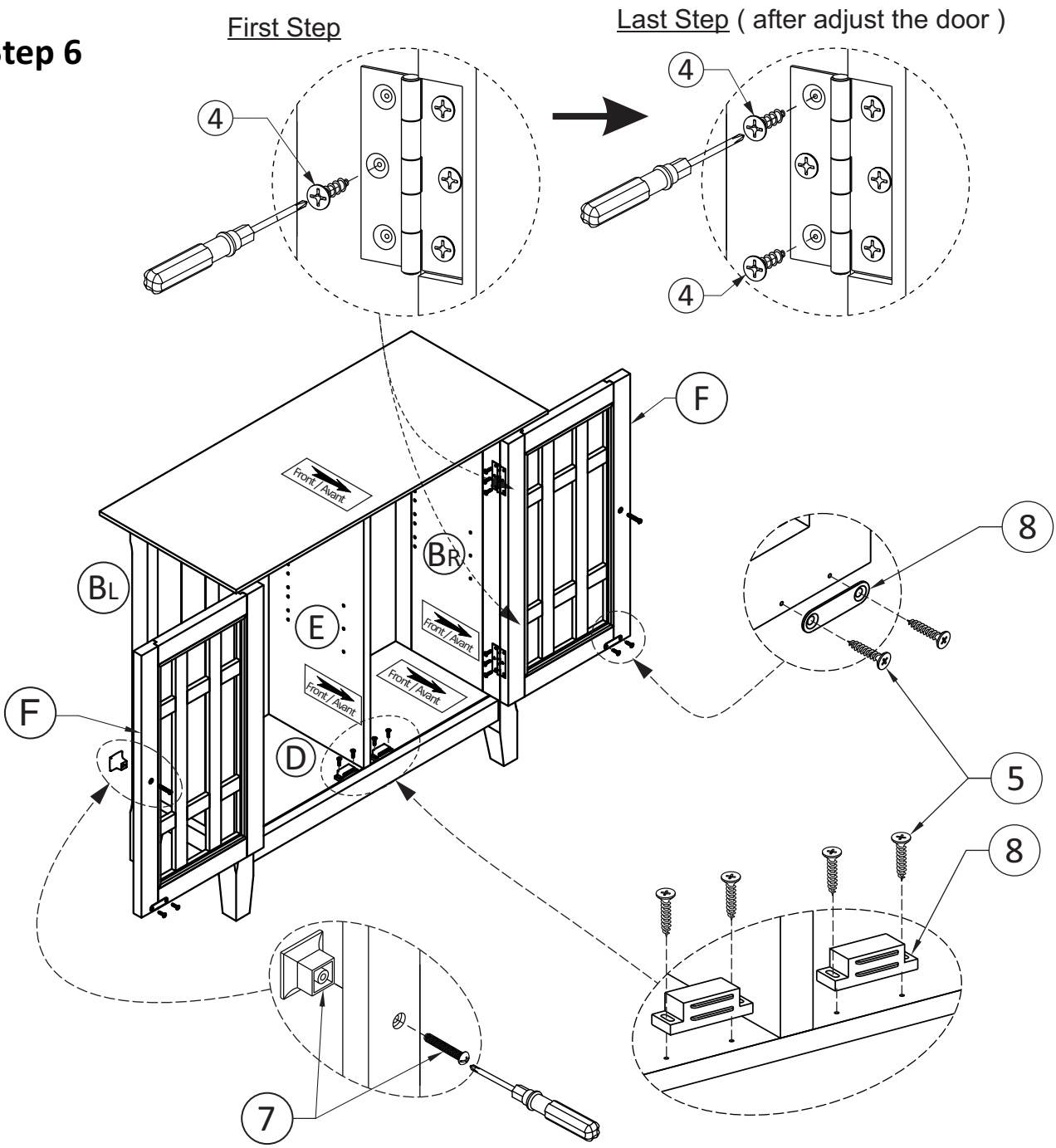

1. Attach hinges on Doors (F) to Sides (BL), (BR) using Phillips Screws (4) into pre-drill holes:
   - Using Phillips screwdriver to attach Screws (4) at middle hole of hinges for both top & bottom hinges.
   - Adjust the door to ensure they are aligned straight & square with bottom shelf & side.
   - Using Phillips screwdriver to tighten the rest of screws (4) into pre-drill holes (top & bottom holes on hinges).
2. Attach Magnet Plates (8) to bottom corner of Doors (F) using Phillips Screws (5) into pre-drilled holes on Doors (F).
3. Attach Magnets (8) using Phillips Screws (5) into pre-drilled holes on Bottom Shelf (D).
4. Use Phillips screwdriver to attach Handles (7) to Doors (F) through guide holes.

Step 7

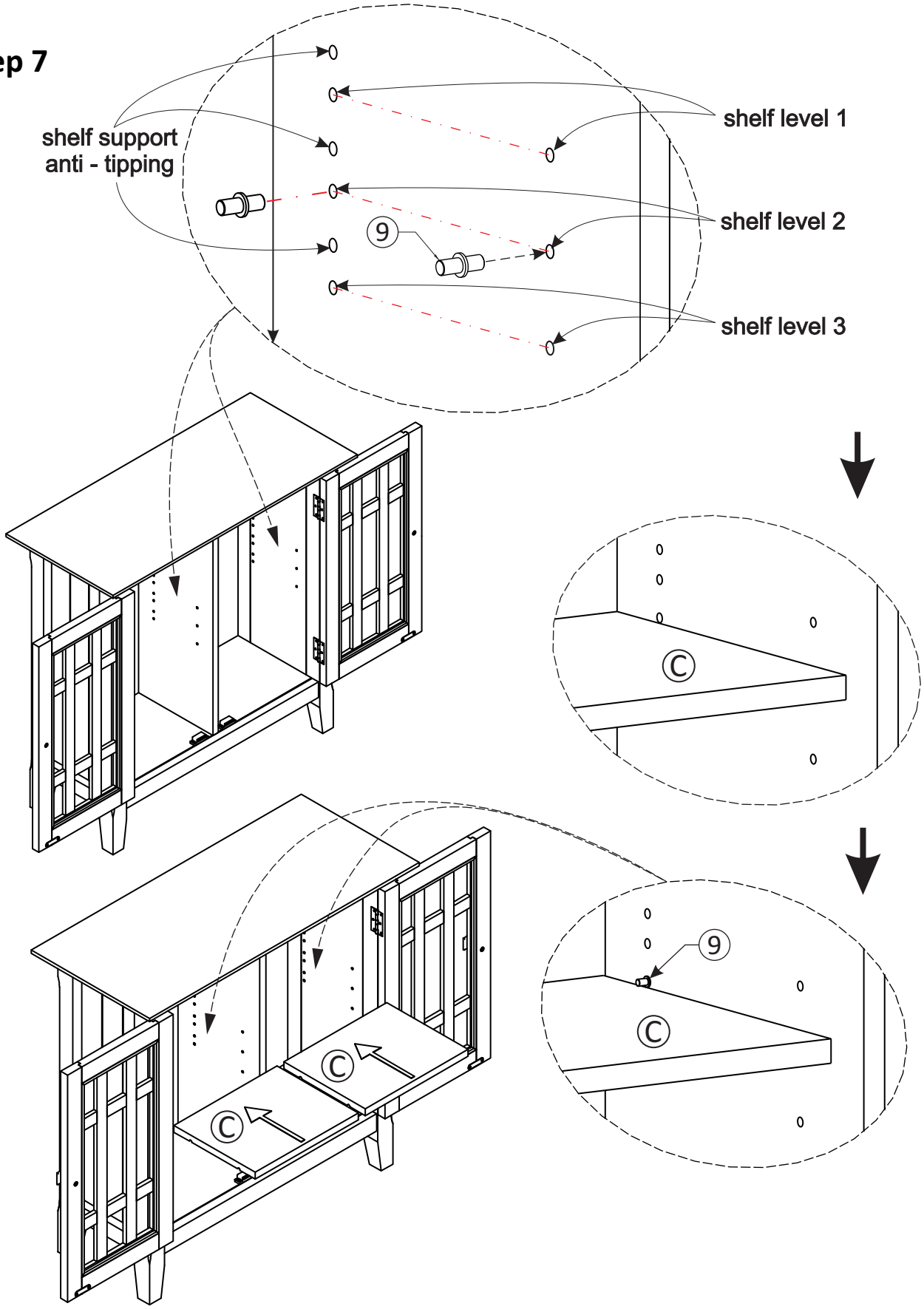

1. Attach 4 Shelf Supports ⑨ for each Shelf Ⓒ in desired location.
2. 2 Shelf Supports ⑨ may be used on back top of each Shelf Ⓒ as a tipping restraint.

Furniture Tip Over Restraint Assembly

WARNING

Serious or fatal crushing injuries can occur from furniture tip-over.
If the furniture tip over restraint kit is not in the box, please contact our customer service department in order to obtain another kit before using the furniture.

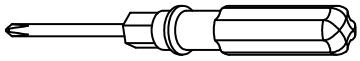

NOTE: The screwdriver is not included in the hardware pack.

Step 8

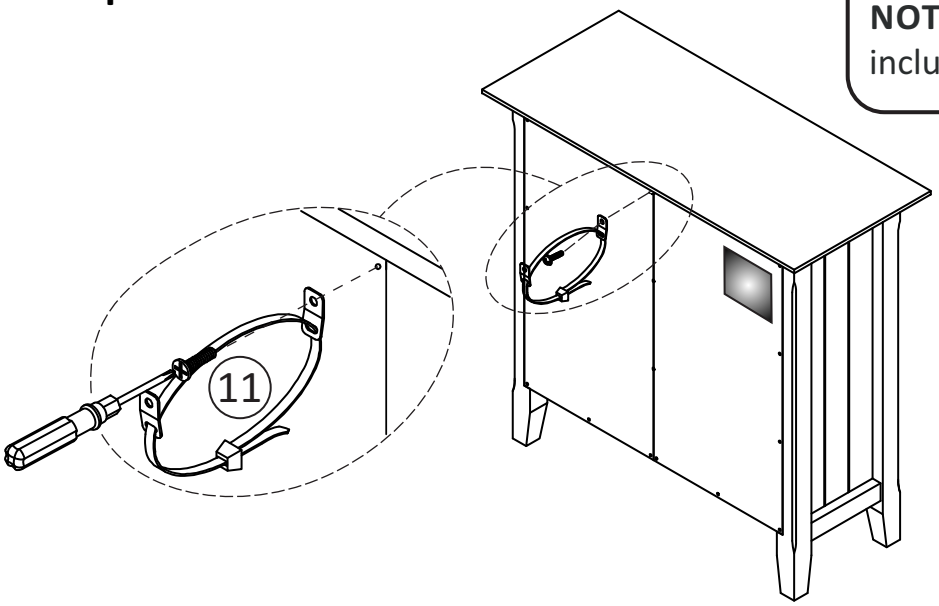

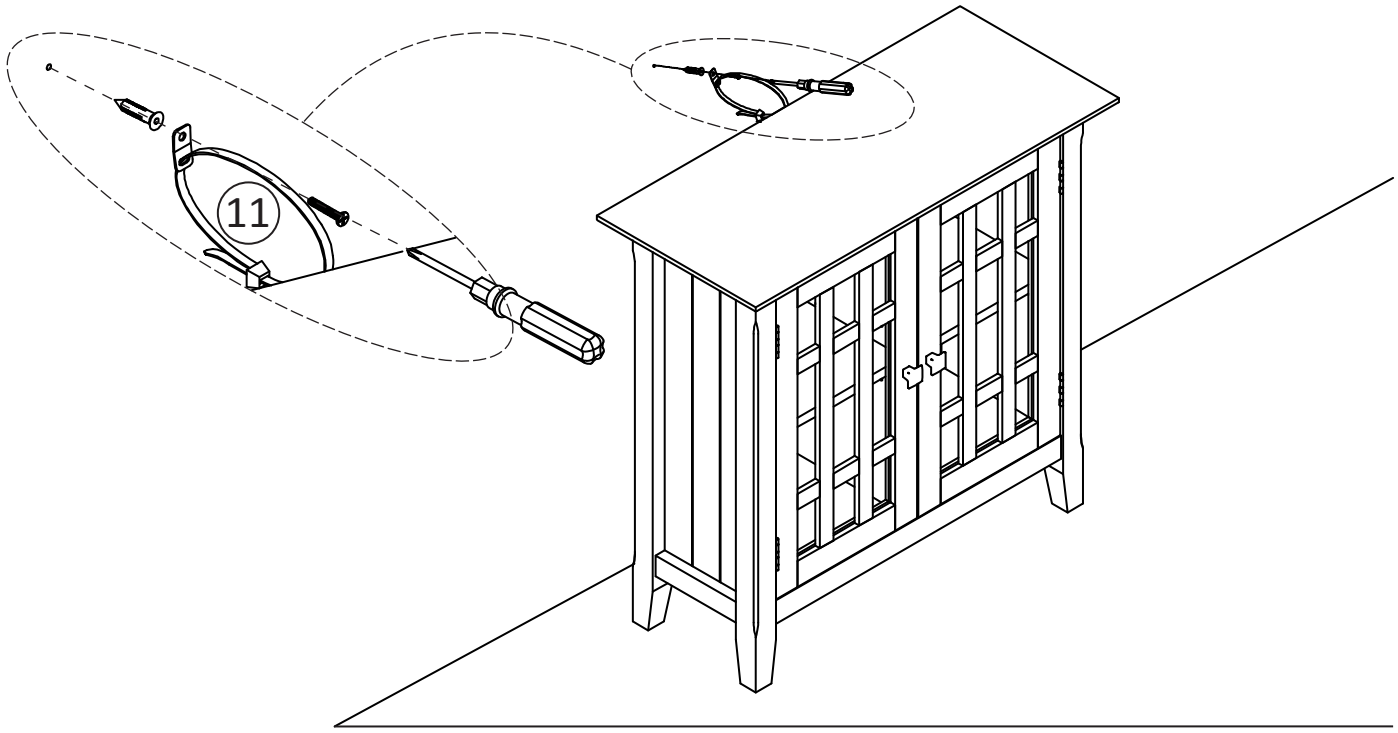

Furniture Anti-Tipping Restraint Instructions

1. Attach one of the mounting brackets securely to the back edge of the furniture. Use the shorter screw.

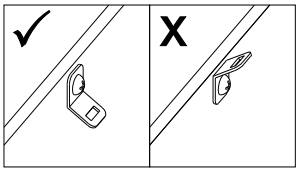

2. Determine where furniture is to be placed and mark location on the wall for mounting bracket screw hole approximately 2 inches below the bracket mounted to the furniture.

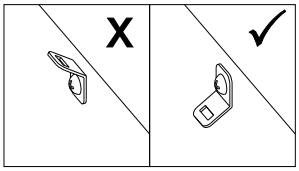

3. Drill a 3/16 inch hole in the wall. Press the plastic anchor into the hole and gently tap until the flange on the anchor is against the wall surface.
4. Position the bracket over the anchor and use the longer screw to securely attach the bracket to the wall.
5. Place the furniture so the back edge is in line with the bracket on the wall.
6. Lace an end of the nylon zip-tie strap down through each bracket. Bring both ends together and slide the smooth side upright through the square-shaped end and pull through to create the "locked" position.
7. Check to make sure the strap is securely laced and locked to the brackets.

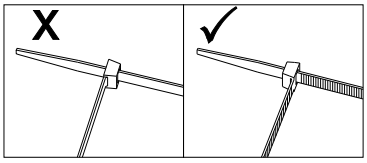

- **DO NOT** put a TV or other heavy objects on top of furniture not intended for use with a TV
- **DO NOT** place heavy objects in top drawers or on top shelves
- **DO NOT** let children climb or hang on drawers, doors or shelves