PTD700LSZSS

GE Profile™ 30" Smart Built-In Convection Double Wall Oven with Left-Hand Side-Swing Doors

DIMENSIONS AND INSTALLATION INFORMATION (IN INCHES)

NOTE: Wall coverings, countertops and cabinets surrounding the wall oven must be able to withstand a temperature of up to 200°F (94°C).

NOTE: If the cabinet in which the wall oven is installed does not have a solid bottom, two braces or runners must be installed to support the weight of the oven. The runners and braces must support up to 400 lbs (181 kg).

NOTE: Door handle protrudes 3" from door face. Cabinets and drawers on adjacent 45° and 90° walls should be placed to avoid interference with the handle.

ATTENTION INSTALLER: Electric wall ovens are NOT approved for installation with a plug and receptacle. They must be hard wired into an approved junction box.

IMPORTANT: Before installing, consult installation instructions packed with product for current dimensional data.

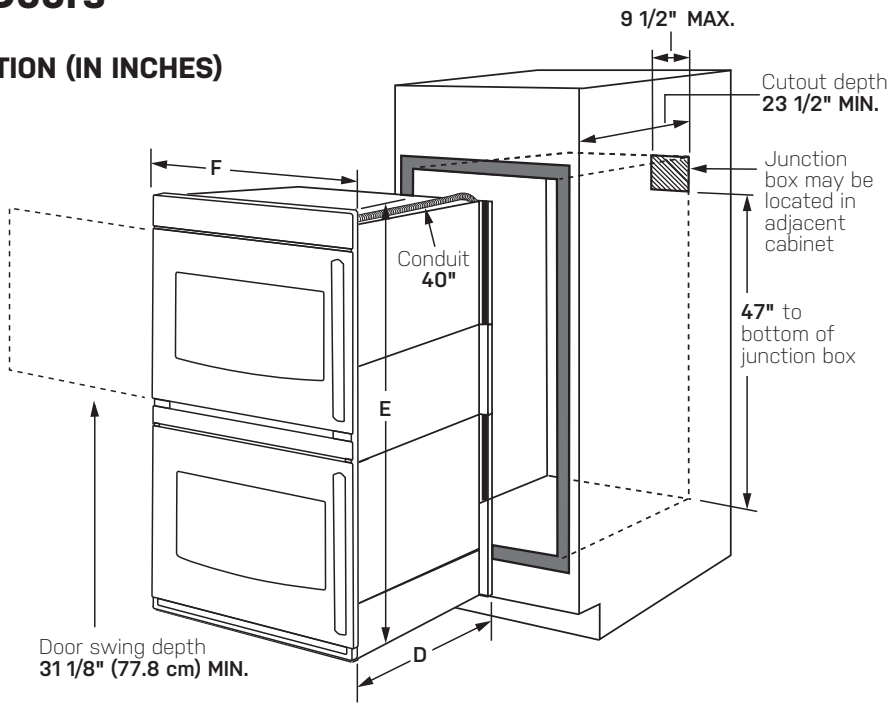

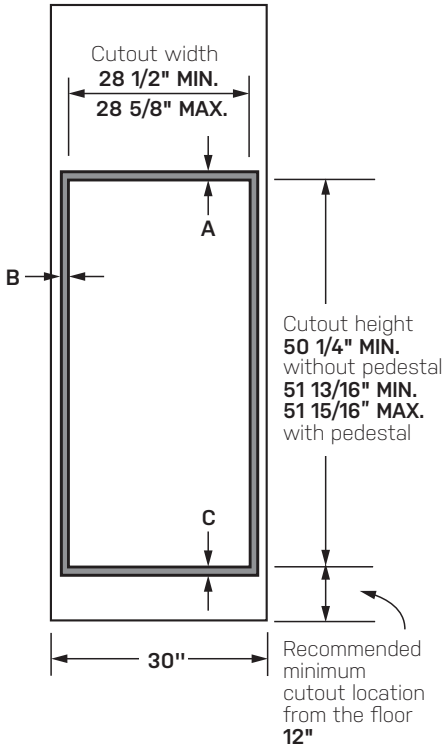

Dimension and installation information are shown in inches.

KW RATING	
240V	8.7
208V	6.5
BREAKER SIZE	
240V	40 Amps
208V	40 Amps

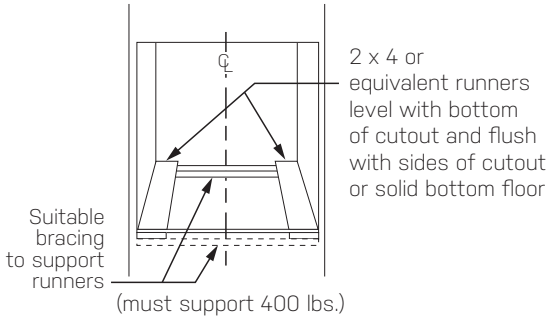

	PKD7000
Cabinet	**30"**
A - Overlap of oven at top of cutout	**1"**
B - Overlap of oven other side of edge of cutout	**11/16"**
C - Overlap of oven at bottom of cutout	**1 1/4"**
Oven	
D - Install depth	**23 1/2"**
E - Overall height with trim	**53"**
F - Overall width	**29 3/4"**

Listed by Underwriters Laboratories

Profile™

For answers to your Monogram, Café™, GE Profile™ or GE Appliances product questions, visit our website at geappliances.com or call GE Answer Center® Service, 800.626.2000.

Specification Revised 10/26 TW3320

PTD700LSZSS

GE Profile™ 30" Smart Built-In Convection Double Wall Oven with Left-Hand Side-Swing Doors

DIMENSIONS AND INSTALLATION INFORMATION (IN INCHES)

NOTE: 30" double electric wall ovens are approved for installation above 27" and 30" warming drawers.

IMPORTANT: Before installing, consult installation instructions packed with ALL products for current dimensional and combination data.

WHEN TO USE THE PEDESTAL RAILS: When replacing an older GE Appliances 30" double wall oven with a new GE Appliances model. Cutout Height = 51 13/16" to 51 15/16". This is our traditional cutout height.

WHEN NOT TO USE THE PEDESTAL RAILS:
When replacing a 30" double wall oven from another manufacturer (ie; Whirlpool) with a new GE Appliances model. Cutout height = 50 1/4". You will need to verify that the existing cutout matches the 50 1/4" dimension.

If the new GE Appliances 30" double wall oven is being installed into new construction (ie; not a replacement), then the recommended installation is to use the pedestal rails.

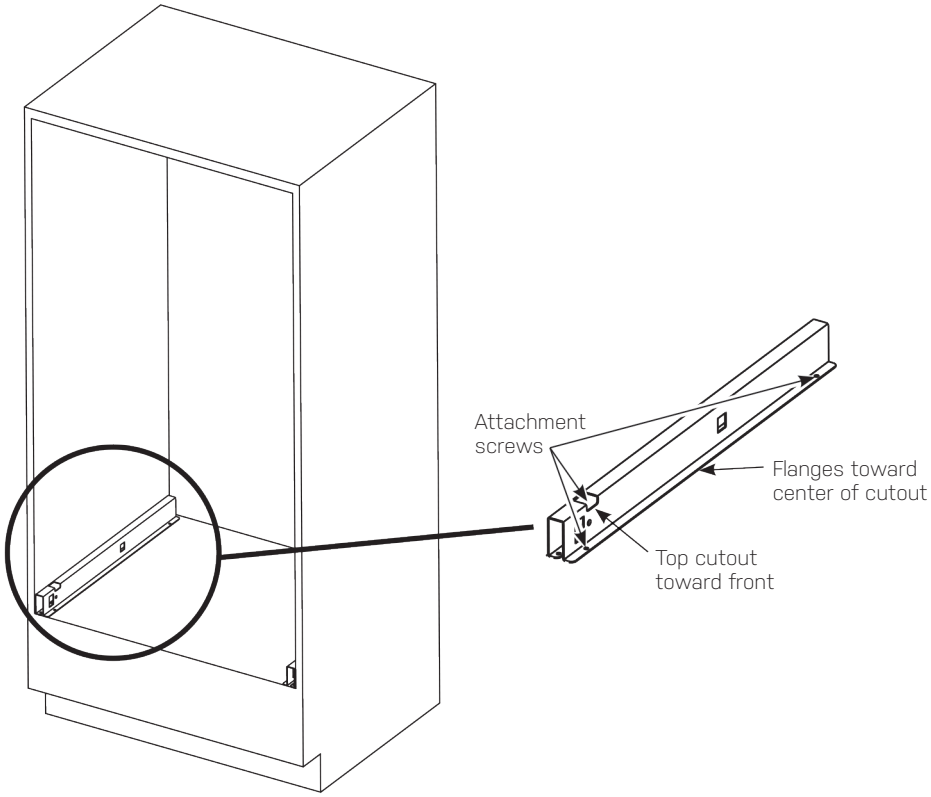

PTD700LSZSS

GE Profile™ 30" Smart Built-In Convection Double Wall Oven with Left-Hand Side-Swing Doors

FEATURES AND BENEFITS

Swing Door – An innovative door design that opens to the side instead of down, eliminating awkward reaching

True European Convection with Direct Air – Faster, more even results for roasts, chicken, turkey and other special-occasion favorites, with the only cooking system that delivers true top-down convection

No Preheat Air Fry – Cook healthier, crispier versions of your favorite foods in less time, thanks to an air fryer right in your oven that doesn't require preheating (optional air fry tray sold separately)

Precision Cooking Modes – Achieve perfect results with an extensive selection of precision cooking modes—including artisan pizza, salmon, roasted vegetables, and bacon—powered by algorithms that track the food's progress and dynamically adjusts time and temperature by precisely managing heat and airflow

7" Customizable Touch Screen Display – A bright, interactive touch screen is easy to use and features unlimited timers, weather updates, recipe apps, and saved favorite recipes to streamline your cooking experience

Streamline Cooking with Voice Command – Use voice commands to control your oven hands-free — set modes, adjust temperatures, and manage timers with ease. Add items to your shopping list or get real-time cooking and appliance guidance through the built-in chatbot, all without lifting a finger

Cooking Assistant – Step into the future of cooking with a platform designed for ultimate convenience. Our advanced digital cooking tools provide direct access to our Cooking Partners' apps, simplifying everything from recipe discovery to shopping and execution with expert cooking tips. It's life, uncomplicated

Premium Bluetooth® Speaker – A built-in Bluetooth speaker connects to your smartphone so you can stream music, podcasts and more while you cook — keeping you entertained without leaving the kitchen

Built-In WIFI, Powered by SmartHQ™ App – Connect, control and manage your oven from anywhere with your smartphone or tablet (Select features require WIFI connection)

Self-Clean Oven with Optional Steam Clean – Let your oven do the cleaning for you with two ways to eliminate baked-on messes

Smart Oven Shortcuts – Upgrade your cooking with this smart oven shortcut feature, saving your most recently used cooking modes for instant access. Seamlessly blend innovation and efficiency so you can focus on what truly matters — creating, entertaining, and enjoying

Fit Guarantee – Ensures your new appliance will fit your existing cutout, or GE Appliances will help cover the modification costs

Model PTD700LSZSS – Stainless Steel

Profile™