KINGSTON

Angle Stop

Installation Instructions

Installation Steps :

1. Apply thread sealant tape to threads (1).
2. Screw valve body (2) onto pipe (3).
3. Place nut (4), metal washer (5) and rubber washer (6) on tube (7).
4. Insert tube (7) into valve.
5. Wrench tighten nut (4) onto valve.
6. Stop any leaks by tightening nuts slightly.

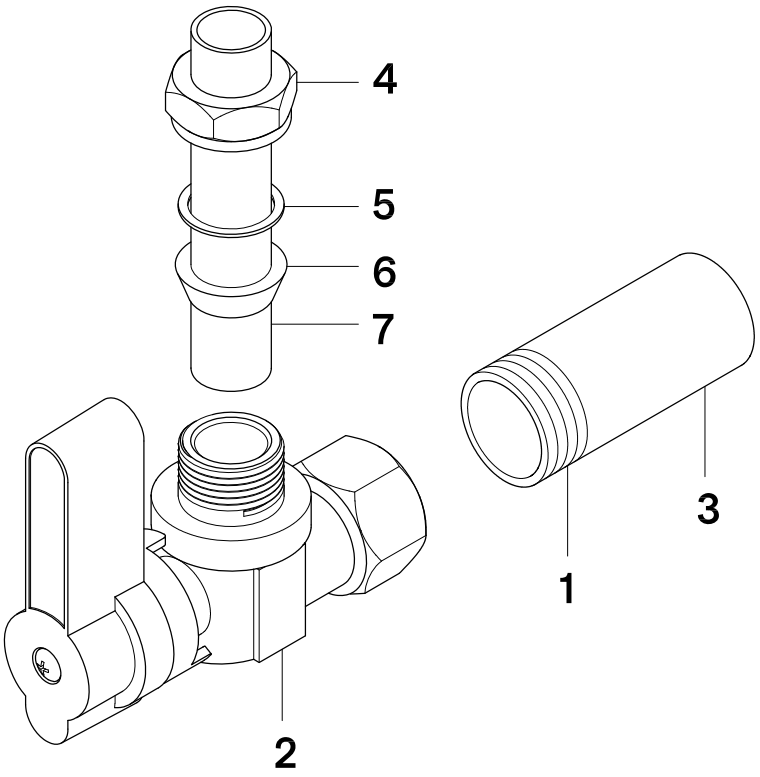

NOTICE

Failure to follow all directions may cause leaks which may result in water damage

www.kingstonbrass.com

TOLL-FREE CUSTOMER SERVICE: 1-877-2-KBRASS
TECHNICAL SUPPORT E-mail: service@kingstonbrass.com
12775 Reservoir Street, Chino, CA 91710

©2025 LVC Kingston LLC. All Rights Reserved.
2025-05-KB