# Engineering Specification

Job Name _____ Contractor _____

Job Location _____ Approval _____

Engineer _____ Contractor's P.O. No. _____

Approval _____ Representative _____

# M5-1

## 5" x 5" Square Strainer

### Specification

Watts M5-1 5" x 5" square nickel bronze strainer.

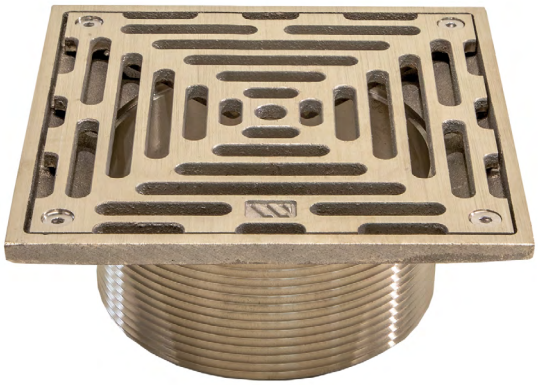

Call customer service if you need assistance with technical details.

| Suffix | Order # | Description | Qty. |
|---|---|---|---|
| M5-1 | M5-1 | 5" x 5" Square Strainer | ☐ |

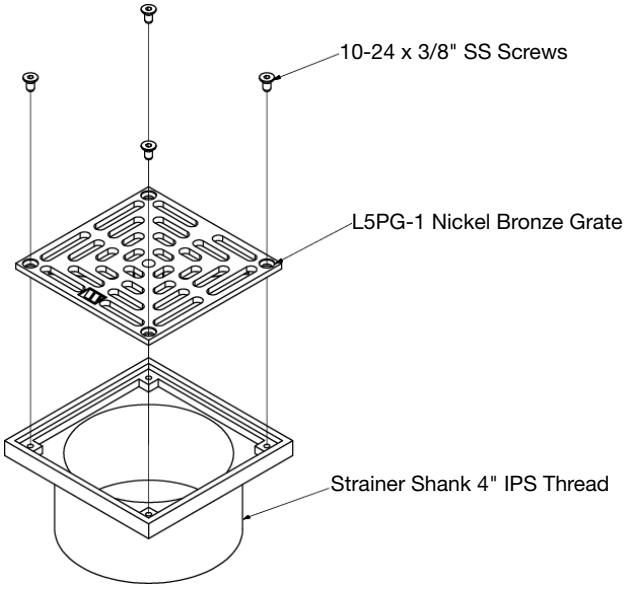


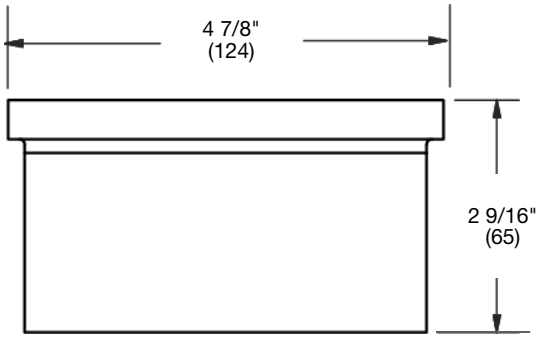


**NOTICE**

The information contained herein is not intended to replace the full product installation and safety information available or the experience of a trained product installer. You are required to thoroughly read all installation instructions and product safety information before beginning the installation of this product.

Watts product specifications in U.S. customary units and metric are approximate and are provided for reference only. For precise measurements, please contact Watts Technical Service. Watts reserves the right to change or modify product design, construction, specifications, or materials without prior notice and without incurring any obligation to make such changes and modifications on Watts products previously or subsequently sold.

**USA:** T: (800) 338-2581 • Watts.com
**Canada:** T: (888) 208-8927 • Watts.ca
**Latin America:** T: (52) 55-4122-0138 • Watts.com



© 2023 Watts