KINGSTON

TO ORDER PARTS, CALL: 1-877-252-7277
www.kingstonbrass.com

# KS3040,1,2,3,5,6,7,8BX

## Single Handle Three-Way Diverter Valve with Square Trim Kit

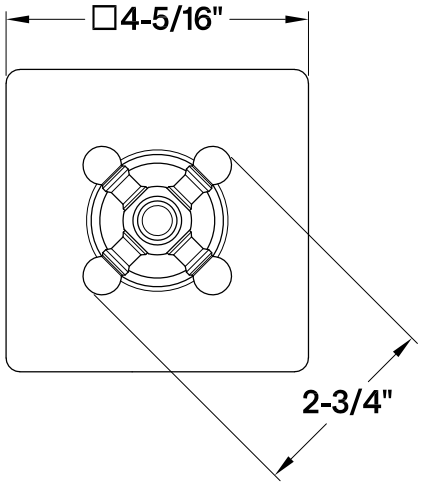


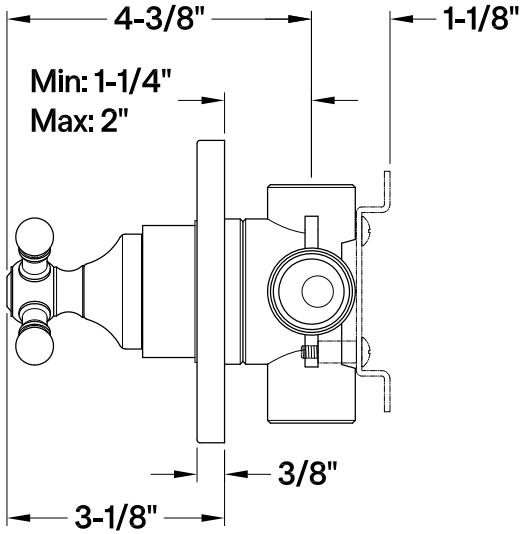


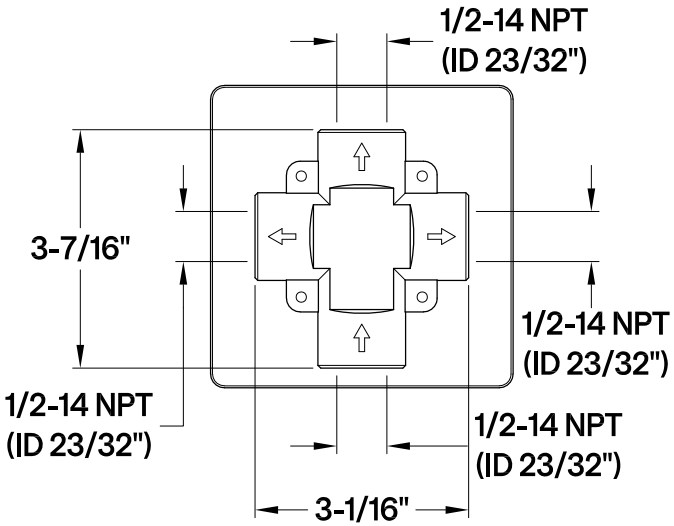


### Bracket

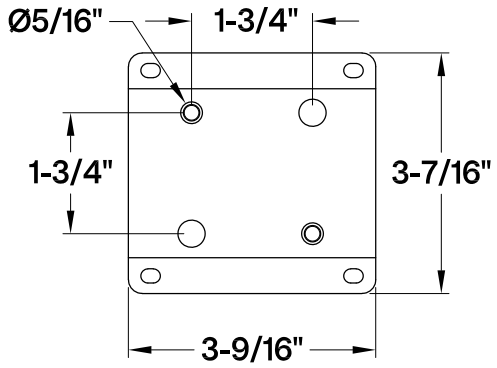


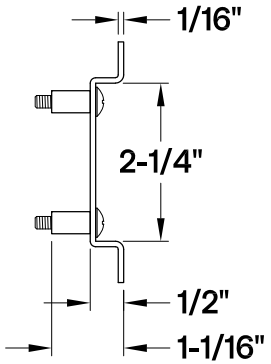


2026-05-B