KINGSTON

TO ORDER PARTS, CALL: 1-877-252-7277
www.kingstonbrass.com

KB461,MB,SB,SN

Twin Handle 4" Centerset Bar Faucet

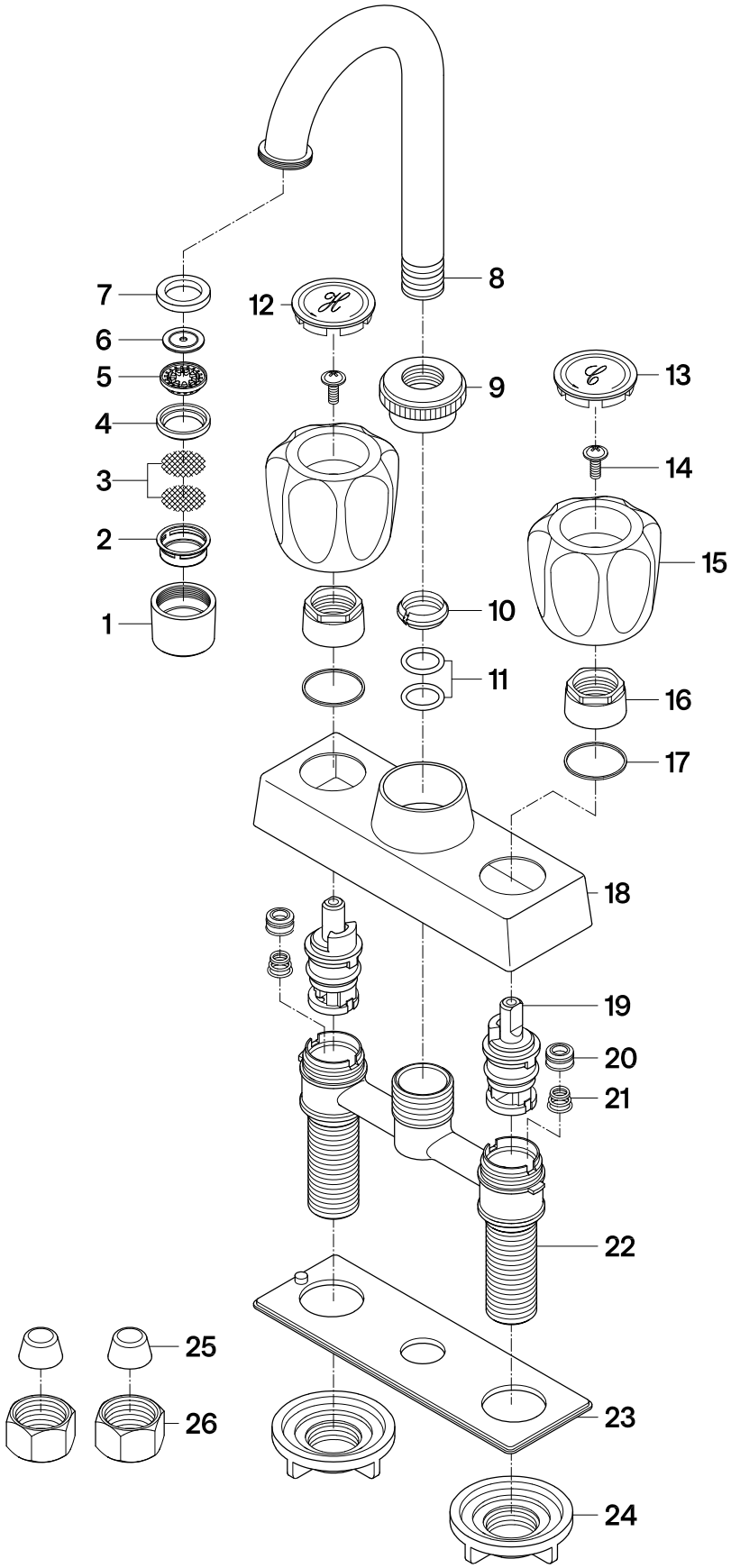

2026-06-A